

Product and Application Catalog
Catálogo de Productos y Aplicaciones

FRAS-LE®

Safety in **Motion Control**

A global leader in brake technology and innovation, Fras-le is one of the largest friction materials manufacturers in the world. Fras-le, certified in ISO 9001, ISO 14000 and ISO TS 16949, also has its own state-of-the-art research & develpment center. Fras-le manufactures over 12,000 part numbers including brake linings, pads and shoes for commercial and passengers vehicles; clutch facings; brake pads and shoes for motorcycles; brake pads for aircraft; molded and woven brake linings for special applications; brake shoes for railway and subway and universal flat sheets. With industrial plants in Brazil, China and the United States, distribution centers in Argentina, Europe and the United Arab Emirates and commercial offices in Chile, Mexico and South Aftica, Fras-le keeps a well-structured team to serve its customers in more than 100 countries on five continents. More information about Fras-le can be found at **www.fras-le.com**

Seguridad en el **Control de Movimientos**

Líder global en tecnología e innovación de frenado, Fras-le es uno de los mayores productores de materiales de fricción en el mundo. Fras-le, certificada con ISO 9001, ISO 14000 e ISO TS 16949, posee también su propio Centro de Investigación y Desarrollo. Fras-le produce más de 12.000 referencias, incluyendo bloques y pastillas para vehículos pesados, pastillas, fricciones y zapatas para vehículos livianos, revestimientos de embrague, pastillas y zapatas para motos, pastillas para aeronaves, pastillas y zapatas para ferrocarriles y metros, fricciones moldeadas y trenzadas y planchas universales. Con fábricas en Brasil, China y Estados Unidos, centros de distribución en Argentina, Europa y Emiratos Árabes y operaciones comerciales en Chile, México y Sudáfrica, Fras-le mantiene un equipo bien estructurado para atender a sus clientes en más de 100 países en los cinco continentes. Para más información sobre Fras-le, visítenos en **www.fras-le.com**



Brake Pads and Linings for Commercial Vehicles
Bloques y Pastillas para Vehículos Pesados





Brake Pads for Aircraft
Pastillas para Aeronaves





Brake Pads, Lining and Shoes for Light Vehicles
Pastillas, Fricciones y Zapatas para Vehículos Livianos





Brake Pads and Shoes for Railways and Subways
Pastillas y Zapatas para Ferrocarriles y Metros





Clutch Facings
Revestimientos de Embrague





Molded and Woven Brake Linings
Fricciones Moldeadas y Trenzadas





Brake Pads and Shoes for Motorcycles
Pastillas y Zapatas para Motos





Universal Flat Sheets
Planchas Universales



EDITION / EDICCIÓN
2017/2018

This Catalog

This catalog presents FRAS-LE Brake Linings listed under 4 different types of references: FMSI, BFMC and WVA, in addition to FRAS-LE's own references.

The BFMC reference numbers and letters contained herein are the copyright of the British Friction Materials Council, London, and are printed by its permission. They may not be reproduced in whole or in part without permission.

The FMSI numbers and numbering system contained herein are protected by copyright and may not be reproduced without written permission from the Friction Materials Standards Institute, Connecticut .

The WVA references (Waren-Vertrieb-Artikel-Nummern) listed herein and the entire reference-system are intellectual property of VRI-Verband der Reibbelagindustrie eV). Reprint, imitation or use without previous written permission by VRI (Verband der Reibbelagindustrie eV), are not allowed.

Rivet sizes specified are for your guidance only; suitability of the rivets should always be checked.

Note: Please enquire items not listed.

DISCLAIMER:
This catalog is intended for use as a "Data Book" and every effort is made to ensure that the information given herein is as accurate, correct and complete as possible; Fras-le cannot and does not accept any responsibility or liability for errors or omissions or harm resulting therefrom.

El Catálogo

Este Catálogo incluye Guarniciones para Frenos que son presentadas en cuatro tipos distintos de referencias: FMSI, BFMC y WVA, además de los números FRAS-LE.

Los números y letras de las referencias BFMC son derechos de British Friction Materials Council Londres y la impresión es hecha con su permisión. No pueden ser reproducidos por completo ni en parte sin su autorización.

Los números FMSI y el sistema de numeración son protegidos por "copyright" y no pueden ser reproducidos sin el permiso por escrito de Friction Materials Standards Institute, Connecticut.

Las referencias WVA (Waren-Vertrieb-Artikel-Nummer) listados en este catálogo y el total sistema de referencias son propiedad de VRI (Verband der Reibbelagindustrie eV). Reimpresión, imitación y/o el uso sin la prévia autorización por escrito por VRI (Verbrand der Reibbelagindustrie eV) no son permitidas.

Las dimensiones de remaches listados sirven apenas como guia; su adecuación debe ser siempre verificada.

Aviso: Solicite informe sobre ítens no listados.

AVISO:
Aseguramos que las informaciones contenidas en este catálogo son las más precisas, correctas y completas posibles: Fras-le no se responsabiliza por errores, omisiones o daños derivados del uso incorrecto de los productos aqui presentados.

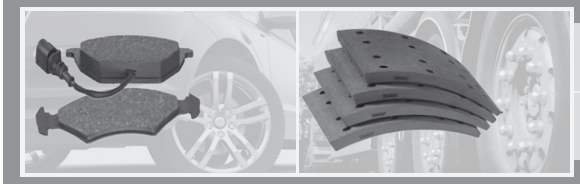

Applications
Aplicaciones

ACOPLADOS Y SEMIRREMOLQUES ____09
ACURA ____09
ACKERMANN ____09
A.D.R. ____09
ALBION ____09
AGRALE ____09
ALFA ROMEO ____10
AM GENERAL ____12
ANTONINI ____12
ASIA MOTORS ____12
ASTIVIA ____12
AUDI ____12
AWD ____17
AXLES & BRAKES MANUFACTURERS ____17
AYATS ____17
BEDFORD ____17
BERGISCHE ACHSEN (BPW) ____18
BISELLI ____18
BMW ____18
BPW ____20
BOVA ____20
BUICK ____21
CADILLAC ____21
CALABRESE ____22
CARDI ____22
CARRIMORE ____22
CASE ____22
CASTERA ____22
CATERPILLAR ____23
CHARGER ____23
CHANA ____23
CHERY ____23
CHRYSLER ____23
CHEVROLET - UTILITARIOS Y CAMIONES ____25
CITROEN ____26
CLARK ____30
CNHTC ____30
CODER ____30
COLAERT ____30
CONTIN ____30
CUMMINS ____31
DACIA ____31
DAEWOO ____31
DAF ____32
DAF BUSES ____33
DAF TRAILERS ____33
DAF TRUCKS ____33
DAIHATSU ____37
DATSUN ____37
DENNIS ____37
DEUTZ ____38
DFSK ____38
DIMEX - OMNIBUS Y CAMIONES ____38
DINA ____38
DODGE ____39
DORSEY ____42
DRESSER ____42
EFFA ____42
EL DETALLE ____42
EJES ____42
ENGESA-FNV (Fruehauf) ____43
ERF ____43
EATON ____47
FACHINI ____47
FAW ____47
FERRARI ____47
FIAT - CAMIONES ____47
FIAT ____47
FNM (Alfa Romeo) ____58
FODEN ____58
FORD ____58
FOTON ____72
FREIGHTLINER ____72
FREIGHTLINER CONSTRUCCIÓN ____73
FREIGHTLINER TRACTOCAMIONES ____73
FRUEHAUF / BENALU / SMB ____73
GENERAL MOTORS ____74
GMC ____85
GOLDEN DRAGON ____87
GORICA ____87
GOLIVE ____87
GOTTI ____87
GRAHL ____87
GROSSPAL ____87
GUERRA ____87
GURGEL ____88
HALDEX ____88
HANOMAG ____88
HELVETICA ____88
HEULIEZ ____88
HINO ____88
HONDA ____92
HUBER-WARCO ____96
HUMMER ____96
HYUNDAI ____96
IDEROL ____98
IKARUS ____98
INDECAR ____98
INFINITI ____98
INTERNATIONAL ____99
ISUZU ____100
IVECO ____103
IVECO TRUCKS ____112
IVECO BUSES ____118
JAC MOTORS ____118
JAGUAR ____119
JEEP ____119
KAROSA ____120
KÄSSBOHRER ____120
KENWORTH ____121
KENWORTH CLASE 7 ____121
KENWORTH CLASE 8 ____121
KENWORTH CONSTRUCCIÓN ____121



Applications
Aplicaciones

- 09 -

KENWORTH TRACTOCAMIONES ____122
KENWORTH MEXICANA / CAMIONES ____122
KENWORTH MEXICANA / TRACTOCAMIONES ____122
KIA MOTORS ____122
KING LONG ____124
KNORR BREMSE ____124
KNOTT ____124
KRONE ____124
LADA ____125
LAG ____125
LAND ROVER ____125
LECINENA ____126
LECITRAILER ____126
LEYLAND ____126
LEXUS ____127
LINCOLN ____127
LOHR ____127
MACK ____127
MAHINDRA ____128
MALDONADO (FREPILCO) ____128
MAN ____128
MAN BUSES ____130
MAN TRUCKS ____133
MARCOPOLO ____142
MARINGÁ ____142
MASSARI ____142
MASSEY-FERGUSON ____142
MAZDA ____143
MERCEDES-BENZ ____144
MERCEDES-BENZ TRUCKS ____161
MERCEDES-BENZ BUSES ____169
MERCURY ____170
METALPI ____171
MERITOR ____171
MINI ____171
MINUANO ____171
MITSUBISHI ____171
MITSUBISHI FUSO ____177
MOL ____177
MONTENEGRO ____177
NEOPLAN ____177
NISSAN ____179
NISSAN / U.D. ____183
NOMA ____188
OLDSMOBILE ____188
OPEL - TODO TERRENO (4WD) ____188
OPTARE ____188
OTTO-DEUTZ (Demisa) ____189
PASTRE ____189
PRATTI - FRUEHAUF ____189
PERROT (WABCO) ____189
PETERBILT ____189
PEUGEOT ____190
PLYMOUTH ____193
PONTIAC ____194
PORSCHE ____194
PROTON ____195
PUMA ____195
RABA ____195
RANDON ____195
REFORMAS - CAMIONES Y/O OMNIBUS ____195
RECRUSUL ____195
RENAULT ____196
RENAULT TRUCKS ____202
RENAULT SPECIAL VEHICLES ____207
RENAULT BUSES ____207
ROVER ____208
RODOVIÁRIA ____209
ROSSETTI ____209
RUBERY OWEN ____209
ROCKWELL (ROR) ____209
S.A.E. (DUPILLIER) ____209
SAAB ____210
SAF ____210
SALTO ____210
SAMRO ____210
SANOS ____210
SATURN ____210
SCANIA ____211
SCANIA AXLES ____215
SCANIA TRUCKS ____215
SCANIA BUSES ____218
SCHIFFER ____218
SCION ____218
SEAT ____218
SEDDON ATKINSON ____220
SIAM DI TELLA ____221
SKODA ____221
SMART ____221
SMB ____221
SOR ____221
SSANGYONG ____221
STERLING ____222
SUBARU ____222
SUNWIN BUS ____223
SUZUKI ____223
TATA ____224
TEREX ____224
TEVES ____224
TOYOTA ____225
TRAILOR ____229
TROLLER ____229
VAG ____229
VALMET ____229
VAN HOOL ____229
VIBERTI ____229
VOLKSWAGEN ____230
VOLVO ____243
VOLVO TRUCKS ____247
VOLVO BUSES ____249
WABCO ____250
WARSTEIN ____250
YORK TRAILERS ____250
YUTONG ____250
ZANELLO (OMNIBUS) ____250

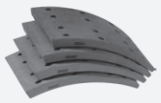

Brake Linings in Sets
Guarniciones para Frenos en Juegos
- 251 -

FRAS-LE References - Referencias FRAS-LE — 252
BFMC References - Referencias BFMC — 257
WVA References - Referencias WVA — 262
FMSI References - Referencias FMSI — 267
LONAFLEX References - Referencias LONAFLEX — 274



Rivets
Remanches
- 285 -

References - Referencias — 285



Brake Linings for Commercial Vehicles
Bloques para Vehículos Pesados
- 286 -

Drilling Diagram - Diagrama de Perforación — 286



Brake Shoes with Lining
Zapatas de Freno con Guarniciones
- 331 -

References - Referencias — 331

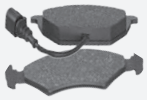

Disc Brake Pads
Pastillas para Frenos a Disco
- 343 -

Index Brake Pads - Indice Pastillas — 344
References - Referencias — 353
Index Pads Size - Indice Tamanõ de Pastillas — 380
Drawings - Dibujos — 390
Cross References - Tabla de Equivalencias WVA — 468
Cross References - Tabla de Equivalencias FMSI — 473
Cross References - Tabla de Equivalencias CODE FMSI — 480



Brake Pads and Shoes for Motorcycles
Pastillas y Zapatas para Motos
- 487 -

Shoes - Zapatas — 488
Pads - Pastillas — 489



Clutch Facings
Revestimientos de Embrague
- 493 -

FRAS-LE References - Referencias FRAS-LE — 494
Special Sizes - Dimensiones Especiales — 501
Drilling Diagram - Diagrama de Perforación — 502



Tractors Brake Linings
Guarniciones para Frenos de Tractores
- 504 -
References - Referencias 505



Molded Roll Linings
Guarniciones Moldeadas en Rollos
- 506 -
References - Referencias 507



Woven Roll Linings
Guarniciones Trenzadas en Rollos
- 509 -
References - Referencias 510



Universal Flat Sheets
Planchas Universales
- 513 -
References - Referencias 514



Flexible Molded Slabs
Tejas Moldeadas Flexibles
- 515 -
References - Referencias 516



Brake Pads and Shoes for Railways and Subways
Pastillas y Zapatas para Ferrocarriles y Metros
- 517 -
References - Referencias 518

FRAS-LE®

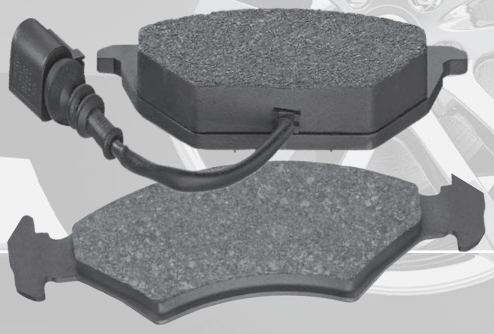

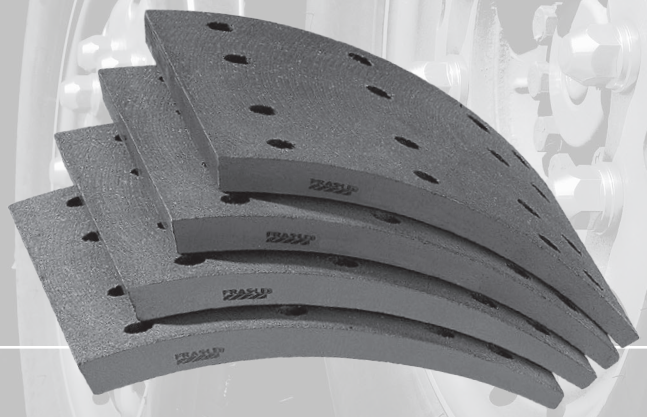

Applications
Aplicaciones

MODEL / *MODELO*	YEAR - *AÑO*	FRONT *DELANTERA*	SYSTEM *SISTEMA*	REAR *TRASERA*	SYSTEM *SISTEMA*	OBS.
ACOPLADOS Y SEMIRREMOLQUES						
CARRETONES				**AC/16**		
CONSTRUCCIONES METALURGICAS				**9052**		
CONSTRUCCIONES METALURGICAS				**4311-RA**		
GALLARETA - FANGIO				**4311-RA**		
ACURA						
CL	97 / 99	**PD/397**	Akebono	**PD/554**		
INTEGRA	94 / 01	**PD/782**		**PD/398**		
INTEGRA R	00 / 01	**PD/449**		**PD/554**		
MDX 3.5L	05 / 06	**PD/561**		**PD/735**		Disco sólido con seguro en la zapata
RDX	08 /	**PD/809**		**PD/690**		
RDX	13 /	**PD/1421**				
RSX	02 / 06			**PD/554**		
SLX	96 / 99			**PD/693**		
TL	97 / 98			**PD/554**		
TL 3.5L / 3.7L				**PD/1073**		
TL 3.2L	05 / 08	**PD/719**		**PD/690**		
TSX	04 / 06			**PD/554**		
TSX 2.4L / 3.5L	09 / 10	**PD/719**		**PD/1088**		
VIGOR	94			**PD/554**		
ACKERMANN						
420 x 160,0 mm				**19200 00**		
A.D.R.						
400 x 120,0 mm				**17115 00**		
ALBION						
CHIEFTAIN CH 40, 13 TR / 40, 20 TR	73 /			**19393 00**		
CLYDESDALE 2 CD 40 16 TR / 41 24 TR	73 /			**19393 00**		
AGRALE						
416	Todos			**287**		
420	Todos			**287**		
4,100	Todos			**TR/315**		
4,200	Todos			**TR/316**		
4,300	Todos			**TR/316**		
6,000	99 /	**PD/102**	Varga	**FD/72**	Bendix	
8,500	97 /	**FD/77**	Master	**FD/77**	Master	
9,200	03 /	**FD/59**	Master	**FD/59**	Master	
13000	07 /	**FD/86**	Master	**FD/87**	Master	
1.600 D	85 / 90	**2042-A**	Bendix	**FD/71**		
1.600 D	90 / 94	**PD/102**	Varga	**FD/72**	Bendix	
1.600 D 4x4	85 / 89	**PD/19-C**	Bendix	**FD/71**		
1.800 D	88 / 90	**2042-A**	Bendix	**FD/71**		
1.800 D	90 / 94	**PD/102**	Varga	**FD/72**	Bendix	
13.000 6x2	07 /	**FD/86**	Master	**FD/87**	Master	
4.500 D	94 / 97	**PD/102**	Varga	**FD/72**	Bendix	
5.000 D	94 / 98	**PD/102**	Varga	**FD/72**	Bendix	
7.000 D	93 /	**FD/77**	Master	**FD/77**	Master	
7.500 TD	94 /	**FD/77**	Master	**FD/77**	Master	
FURGOVAN 6.000	99 /	**PD/102**	Varga	**FD/72**	Bendix	
FURGOVAN 8.000	00 /	**FD/77**	Master	**FD/77**	Master	

MODEL / *MODELO*	YEAR - *AÑO*	FRONT *DELANTERA*	SYSTEM *SISTEMA*	REAR *TRASERA*	SYSTEM *SISTEMA*	OBS.
AGRALE						
MA 6.0 CHASSIS CARRO FORTE		**PD/102**	Varga	**FD/72**	Bosch	
MA 7.0	00 /	**FD/77**	Master	**FD/77**	Master	Ônibus
MA 7.5	00 /	**FD/77**	Master	**FD/77**	Master	Ônibus
MA 7.9 E-TRONIC	06 /	**FD/77**	Master	**FD/77**	Master	Ônibus
MA 8.5 SUPER	02 /	**FD/59**	Master	**FD/59**	Master	Ônibus
MA 8.5 SUPER E	02 /	**FD/59**	Master	**FD/59**	Master	Ônibus
MA 8.5 TCA	02 /	**FD/59**	Master	**FD/59**	Master	Ônibus
MA 8.5 TCE	00 /	**FD/77**	Master	**FD/77**	Master	Ônibus
MA 9.2	03 /	**FD/59**	Master	**FD/59**	Master	Ônibus
MA 12.0	01 /	**FD/88**	Master	**FD/88**	Master	Ônibus
MA 17.0	13 /	**FD/88**	Master	**4710**	Master	Ônibus
MARRUA AM 20	08 /	**PD/332**	Bosch	**FD/78**	Bosch	
MARRUA AM 50 / AM 50 L	08 /	**PD/332**	Bosch	**FD/78**	Bosch	
MARRUA AM 100 / AM 100 CC	08 /	**PD/332**	Bosch	**FD/78**	Bosch	
MARRUA AM 100 CD / AM 100 CD CC	08 /	**PD/332**	Bosch	**FD/78**	Bosch	
MARRUA AM 150 / AM 150 CC	08 /	**PD/332**	Bosch	**FD/78**	Bosch	
MARRUA AM 150 CD / AM 150 CD CC	08 /	**PD/332**	Bosch	**FD/78**	Bosch	
MARRUA AM 200 / AM 200 CC	08 /	**PD/332**	Bosch	**FD/78**	Bosch	
MARRUA AM 200 CD / AM 200 CD CC	08 /	**PD/332**	Bosch	**FD/78**	Bosch	
MT 12.0	01 /	**FD/88**	Master	**FD/88**	Master	Ônibus
MT 12.0 ISBE	09-13 /	**PD/116**				
MT 15.0 LE	09-13 /	**PD/116**				
MT 15.0 TCE	09-13 /	**PD/116**				
MT 17.0 LE	09-13 /	**PD/116**				
TX-1.100	81 / 82	**2006-T**	Bendix	**2080-T**	Bendix	
TX-1.200	83 / 84	**2006-T**	Bendix	**2080-T**	Bendix	
TX-1.600	85 / 90	**2042-A**	Bendix	**FD/71**		
W10 (CHASSI MA10.0)		**L-1059**				
ALFA ROMEO						
147	02 / 07	**PD/66-A**				
156	02 / 04	**PD/66-B**		**PD/451**		
166	02 / 03			**PD/451**		
2,150	70 / 73	**PD/9**	Varga			
2,300	74 / 78	**PD/1**	Teves	**PD/5**	Teves	
145 1.3 ie	94 / 97	**PD/335-A**	Girling	**PD/430**	Girling	
145 1.3 ie	95 / 97	**PD/433-B**	Teves	**PD/430**	Girling	
145 1.4	94 / 97	**PD/335-A**	Girling	**PD/430**	Girling	
145 1.4 TDS L	98 /	**PD/403-B**	Teves	**PD/439**	Girling	
145 1.4 TS 16V	97 /	**PD/403-B**	Teves	**PD/439**	Girling	
145 1.6	95 / 97	**PD/433-B**	Teves	**PD/430**	Girling	
145 1.6	94 / 97	**PD/335-A**	Girling	**PD/430**	Girling	
145 1.6	97 /			**PD/439**	Girling	
145 1.6 Montreal	98 /	**PD/403-B**	Teves	**PD/439**	Girling	
145 1.6 TS 16V	97 /	**PD/403-B**	Teves	**PD/439**	Girling	
145 1.7 16V	96 / 97	**PD/66-A**	Teves	**PD/430**	Girling	
145 1.7 16V	94 / 97	**PD/335-A**	Girling	**PD/430**	Girling	
145 1.8 TS 16V	97 /	**PD/66-A**	Teves	**PD/439**	Girling	
145 1.9 TD	95 / 97	**PD/433-B**	Teves	**PD/430**	Girling	
145 1.9 TD	97 /	**PD/403-B**	Teves	**PD/439**	Girling	
145 1.9 Turbo Diesel	94 / 97	**PD/335-A**	Girling	**PD/430**	Girling	
145 2.0 16V Quadrifoglio	10-96 /	**PD/66-A**	Teves	**PD/439**	Girling	
145 2.0 TD	94 / 97	**PD/335-A**	Girling	**PD/430**	Girling	
145 2.0 TS 16V	95 /	**PD/66-A**	Teves	**PD/430**	Girling	

MODEL / *MODELO*	YEAR - *AÑO*	FRONT *DELANTERA*	SYSTEM *SISTEMA*	REAR *TRASERA*	SYSTEM *SISTEMA*	OBS.
ALFA ROMEO						
146 1.3	95 / 96	**PD/335-A**	Girling			
146 1.3	95 / 97	**PD/433-B**	Teves	**PD/430**	Girling	
146 1.4	94 / 95	**PD/335-A**	Girling	**PD/430**	Girling	
146 1.4 Junior	98 /	**PD/403-B**	Teves	**PD/439**	Girling	
146 1.4 TS 16V	97 /	**PD/403-B**	Teves	**PD/439**	Girling	
146 1.6	95 / 97	**PD/433-B**	Teves	**PD/430**	Girling	
146 1.6	94 / 97	**PD/335-A**	Girling	**PD/430**	Girling	
146 1.6 Luxe	95 / 97	**PD/335-A**	Girling	**PD/430**	Girling	
146 1.6 TS 16V	97 /	**PD/403-B**	Teves	**PD/439**	Girling	
146 1.7	94 / 97	**PD/335-A**	Girling	**PD/430**	Girling	
146 1.7 16V	95 / 97	**PD/433-B**	Teves	**PD/430**	Girling	
146 1.8 TS 16V	97 /	**PD/66-A** **PD/66-B**	Teves	**PD/439**	Girling	
146 1.8i 16V	06-97 /			**PD/439**	Girling	
146 1.9 TD	95 / 97	**PD/433-B**	Teves	**PD/430**	Girling	
146 1.9 TD	97 /	**PD/403-B**	Teves	**PD/439**	Girling	
146 1.9 Turbo Diesel	94 / 97	**PD/335-A**	Girling	**PD/430**	Girling	
146 2.0 D TD	95 /	**PD/335-A**	Girling	**PD/430**	Girling	
146 2.0 Ti Twin Spark	95 /	**PD/66-A** **PD/66-B**	Teves	**PD/430**	Girling	
146 2.0 TS 16V	95 / 97	**PD/66-A** **PD/66-B**	Teves	**PD/430**	Girling	
146 2.0 TS 16V	98 /	**PD/403-B**	Teves	**PD/439**	Girling	
146 2.0i 16V Twin Spark	06-97 /	**PD/66-A**	Teves	**PD/439**	Girling	
155 1.7 i Twin Spark	95 / 97	**PD/335-A**	Girling	**PD/430**	Girling	
155 1.8 Twin Spark	92 / 97	**PD/335-A**	Girling	**PD/430**	Girling	
155 1.9	92 /	**PD/483-A**	Girling	**PD/430**	Girling	
155 2.0	92 /	**PD/483-A**	Girling	**PD/430**	Girling	
155 2.0 16V Turbo	95 / 98	**PD/66-A** **PD/66-B**	Teves	**PD/430**	Girling	
155 2.0 TD	/ 97	**PD/400-A**	Girling	**PD/334**	Girling	
155 2.0 TD	94 / 99	**PD/335-A**	Girling			
155 2.0 TD	94 / 99	**PD/484-A**	Girling	**PD/430**	Girling	
155 2.0 TS 16V Turbo Q4	92 / 97			**PD/439**	Girling	
155 2.0 Twin Spark	92 / 96	**PD/335-A**	Girling	**PD/430**	Girling	
155 2.5	92 /	**PD/483-A**	Girling	**PD/430**	Girling	
155 2.5 TD	94 / 99	**PD/335-A**	Girling			
155 2.5 TD	94 / 99	**PD/484-A**	Girling	**PD/430**	Girling	
155 2.5 TD V6	/ 97	**PD/400-A**	Girling	**PD/334**	Girling	
155 2.5 V6	94 / 98	**PD/335-A**	Girling	**PD/430**	Girling	
155 2.5 V6	95 / 99	**PD/66-A** **PD/66-B**	Teves	**PD/430**	Girling	
156 1.6 i	98 /	**PD/66-A** **PD/66-B**	Teves	**PD/451**	Girling	
156 1.8 i	98 /	**PD/66-A** **PD/66-B**	Teves	**PD/451**	Girling	
156 1.9 TD	98 /	**PD/66-A** **PD/66-B**	Teves	**PD/451**	Girling	
156 2.0 Ti Twin Spark	97 /	**PD/66-A** **PD/66-B**	Teves	**PD/451**	Girling	
156 2.0 SPORTWAGON	00 /	**PD/1331**	Lucas			
156 2.4 JTD	09-97 / 08-05	**PD/66-A** **PD/66-B**	Teves	**PD/451**	Girling	
156 2.5 i V6	03 /	**PD/66-A**	Teves			
156 2.5 V6 Twin Spark	97 /	**PD/66-A** **PD/66-B**	Teves	**PD/451**	Girling	
156 2.5 V6 24V	00 /	**PD/1331**	Lucas			
164 2.0 i Twin Spark	/ 95	**PD/483-A**	Girling	**PD/334**	Girling	

MODEL / *MODELO*	YEAR - *AÑO*	FRONT *DELANTERA*	SYSTEM *SISTEMA*	REAR *TRASERA*	SYSTEM *SISTEMA*	OBS.
ALFA ROMEO						
164 2.0 Turbo Intercooler	/ 95	**PD/483-A**	Girling	**PD/334**	Girling	
164 2.5 TD V6 24V	/ 94	**PD/483-A**	Girling	**PD/334**	Girling	
164 3.0 i Confort	/ 94	**PD/483-A**	Girling	**PD/334**	Girling	
164 3.0 V6 12V	90 / 97	**PD/483-A**	Girling	**PD/334**	Girling	
164 3.0 V6 24V	95 / 97	**PD/483-A**	Girling	**PD/334**	Girling	
164 3.0 V6 Q4	93 / 99	**PD/483-A**	Girling	**PD/451**	Girling	
166 16 VTS	98 / 00	**PD/66-A**	Teves	**PD/451**	Girling	
166 2.4 JTD	98 / 00	**PD/66-A**	Teves	**PD/451**	Girling	
166 2.5 V6 24V	98 / 00	**PD/66-A**	Teves	**PD/451**	Girling	
166 3.0 V6 24V	98 / 00	**PD/66-A**	Teves	**PD/451**	Girling	
33 1.7 i 4WD	90 / 95	**PD/400-A**	Girling			
33 1.7 i Quadrifoglio	90 / 95	**PD/400-A**	Girling	**PD/430**	Girling	
33 1.7 Quadrifoglio 16V	89 / 95	**PD/400-A**	Girling	**PD/430**	Girling	
GTV 1.8 16V	98 / 00	**PD/403-B**	Teves			
GTV 2.0 TS 16V	96 / 00	**PD/66-A**	Teves	**PD/430**	Girling	
GTV 2.0 Twin Spark	95 / 00	**PD/484-A**	Girling			
GTV 2.0 V6 Turbo	96 / 00	**PD/66-A**	Girling	**PD/430**	Girling	
GTV 3.0	96 / 00	**PD/66-A**	Teves	**PD/430**	Girling	
SPIDER 2.0 TS 16V	96 / 00	**PD/66-A**	Teves	**PD/430**	Girling	
SPIDER 3.0 V6	96 / 00	**PD/66-A**	Teves	**PD/430**	Girling	
TI-4	77 / 86	**PD/1**	Teves	**PD/5**	Teves	
AM GENERAL						
HUMMER H2	03 / 04	**PD/571**		**PD/572**		
ANTONINI						
CARRETA	98 /			**CA/32**	Master	
ASIA MOTORS						
TOPIC FULL	93 /	**PD/331**	Akebono	**KI/133-CP**		
TOPIC STD	93 /	**PD/331**	Akebono	**KI/133-CP**		
TOPIC VAN	93 /	**PD/331**	Akebono	**KI/133-CP**		
TOWNER 1.0	09 /	**PD/1330**				
TOWNER COACH	93 /	**PD/330**	Akebono	**AM/323-CP**		
TOWNER FULL	93 /	**PD/330**	Akebono	**AM/323-CP**		
TOWNER VAN	93 /	**PD/330**	Akebono	**AM/323-CP**		
TOWNER (TODAS)	07 /			**HA/380-CP**		Freio traseiro Ø 228,6x41mm
ASTIVIA						
ACOPLADOS Y SEMIRREMOLQUES				**9251/8**		
ACOPLADOS Y SEMIRREMOLQUES				**CA/32**		
CARRETONES	94 / 99			**MB/186-RA-L**		
CARRETONES	99 /			**MB/193-L**		
AUDI						
A3	99 / 00	**PD/384-A**		**PD/59**		
A3	99 / 01	**PD/58**		**PD/59**		
A3	00 /	**PD/384-A**		**PD/58**		
A3	00 /	**PD/384**		**PD/334**		
A3	08 /			**PD/1030**		
A3	09 /			**PD/1465**		
A3 2.0L	06 / 07	**PD/1000-B**		**PD/1030**		
A3 1.6	96 / 98	**PD/367**	Bosch	**PD/334**	Girling	Importado

MODEL / *MODELO*	YEAR - *AÑO*	FRONT *DELANTERA*	SYSTEM *SISTEMA*	REAR *TRASERA*	SYSTEM *SISTEMA*	OBS.
AUDI						
A3 1.6	99 / 03-02	**PD/58 PD/58-B**	Teves	**PD/362**	Girling	
A3 1.6	04-02 /	**PD/73 PD/73-B**	Teves	**PD/362**	Girling	
A3 1.6 / 1.8	98 /	**PD/367**	Teves	**PD/362**	Girling	
A3 1.6 / 1.8 / 1.8 T / 2.0	97 /	**PD/58 PD/58-B**	Teves	**PD/362**	Girling	
A3 1.6 FSi	03-03 /	**PD/1000-B**	Teves			
A3 1.6i	03-03 /	**PD/1000-B**	Teves			
A3 1.8	96 / 98	**PD/367**	Bosch	**PD/334**	Girling	Importado
A3 1.8	99 / 03-02	**PD/58 PD/58-B**	Teves	**PD/362**	Girling	
A3 1.8	04-02 /	**PD/73 PD/73-B**	Teves	**PD/362**	Girling	
A3 1.8 20V T	08-96/	**PD/340-B**	Teves	**PD/362**	Girling	
A3 1.8 T	96 /	**PD/384**	Teves	**PD/362**	Girling	
A3 1.8 TFSi	03-03 /	**PD/1000-B**	Teves			
A3 1.9 TDi	97 /			**PD/362**	Girling	
A3 1.9 TDi	03-03 /	**PD/1000-B**	Teves			
A3 2.0 FSi	03-03 /	**PD/1000-B**	Teves	**PD/1030**	Lucas	
A3 2.0 FSi QUATTRO	03-03 /	**PD/1000-B**	Teves	**PD/1030**	Lucas	
A3 2.0 TDi	03-03 /	**PD/1000-B**	Teves	**PD/1030**	Lucas	
A3 2.0 TDi QUATTRO	03-03 /	**PD/1000-B**	Teves	**PD/1030**	Lucas	
A3 3.2i V6 QUATTRO	03-03 /			**PD/1030**	Lucas	
A3 CONVERSIVEL 1.8 TFSi	04-08 /	**PD/1000-B**	Teves	**PD/1030**	Lucas	
A3 QUATRO 1.8i T	98 /	**PD/340-B**	Teves	**PD/362**	Girling	
A3 QUATRO S3 1.8i	03-99 /	**PD/340-B**	Teves	**PD/362**	Girling	
A3 QUATTRO	09 /	**PD/1000-B**	Teves	**PD/1030**	Lucas	
A3 QUATTRO	09 /			**PD/1465**		
A3 S3 QUATTRO	11-06 /			**PD/1030**	Lucas	
A3 SPORTBACK	09 /			**PD/1465**		
A3 SPORTBACK 1.6 FSi	03-03 /	**PD/1000-B**	Teves			
A3 SPORTBACK 1.6i	03-03 /	**PD/1000-B**	Teves			
A3 SPORTBACK 1.8 TFSi	03-03 /	**PD/1000-B**	Teves			
A3 SPORTBACK 1.9 TDi	03-03 /	**PD/1000-B**	Teves			
A3 SPORTBACK 2.0 FSi	03-03 /	**PD/1000-B**	Teves	**PD/1030**	Lucas	
A3 SPORTBACK 2.0 FSi QUATTRO	03-03 /	**PD/1000-B**	Teves	**PD/1030**	Lucas	
A3 SPORTBACK 2.0 TDi	03-03 /	**PD/1000-B**	Teves	**PD/1030**	Lucas	
A3 SPORTBACK 2.0 TDi QUATTRO	03-03 /	**PD/1000-B**	Teves	**PD/1030**	Lucas	
A3 SPORTBACK 3.2i V6 QUATTRO	03-03 /			**PD/1030**	Lucas	
A3 SPORTBACK S3 QUATTRO	11-06 /			**PD/1030**	Lucas	
A3 / TT	04-02 /	**PD/1232-B**				
A4	05 / 06			**PD/592-B**		
A4	09 /			**PD/1030**	Lucas	
A4	96 / 00	**PD/384 PD/384-A**		**PD/334**		
A4	01 /	**PD/384-A**		**PD/334**		
A4	02 / 04	**PD/525-A**		**PD/59**		
A4	06 / 08			**PD/1030**		
A4 (Respaldo 12mm)	94 /	**PD/336**	Girling	**PD/334**	Girling	Discos Sólidos
A4 (Respaldo 12mm)	94 /	**PD/329**	Girling	**PD/334**	Girling	Discos Ventilados
A4 (Respaldo 12mm)	97 /	**PD/336**	Girling	**PD/362**	Girling	Discos Sólidos
A4 (Respaldo 8,7mm)	97 /	**PD/413**	Girling	**PD/362**	Girling	Discos Ventilados
A4 1.6 (8E2 / B6)	11-00 /	**PD/525-A**	Teves	**PD/362**	Girling	
A4 1.6 (Respaldo 15mm)	97 /	**PD/467**	Girling	**PD/334**	Girling	Discos Sólidos
A4 1.6 (Respaldo 15mm)	97 /	**PD/466**	Girling	**PD/334**	Girling	Discos Ventilados

MODEL / *MODELO*	YEAR - *AÑO*	FRONT *DELANTERA*	SYSTEM *SISTEMA*	REAR *TRASERA*	SYSTEM *SISTEMA*	OBS.
AUDI						
A4 1.6 (Respaldo 8,7mm)	97 /	**PD/443**	Girling	**PD/362**	Girling	Discos Sólidos
A4 1.8	94 /	**PD/384 PD/384-A**	Teves			
A4 1.8	94 /	**PD/336**	Girling	**PD/334**	Girling	
A4 1.8 (Respaldo 15mm)	97 /	**PD/467**	Girling	**PD/334**	Girling	Discos Sólidos
A4 1.8 (Respaldo 15mm)	97 /	**PD/466**	Girling	**PD/334**	Girling	Discos Ventilados
A4 1.8 (Respaldo 8,7mm)	97 /	**PD/443**	Girling	**PD/362**	Girling	Discos Sólidos
A4 1.8iT	11-04 / 10-07			**PD/1030**	Lucas	
A4 1.8iT QUATTRO	11-04 / 10-07			**PD/1030**	Lucas	
A4 1.8T CONVERSÍVEL	07-02 /	**PD/525-A**	Teves	**PD/362**	Girling	
A4 1.8T (8E2/B6)	11-00 /	**PD/525-A**	Teves	**PD/362**	Girling	
A4 1.8T (B5/8D)	11-94 / 09-01	**PD/525-A**	Teves	**PD/362**	Girling	
A4 1.8T CONVERSÍVEL	05-03 /	**PD/525-A**	Teves	**PD/362**	Girling	
A4 1.8T QUATTRO (8E2/B6)	11-00 /	**PD/525-A**	Teves	**PD/362**	Girling	
A4 1.8T QUATTRO (B5/8D)	11-94 / 09-01	**PD/525-A**	Teves	**PD/362**	Girling	
A4 1.9 TDI (8E2/B6)	11-00 /	**PD/525-A**	Teves	**PD/362**	Girling	
A4 1.9 TDI (B5/8D)	11-94 / 09-01	**PD/525-A**	Teves	**PD/362**	Girling	
A4 1.9 Tdi (Respaldo 15mm)	97 /	**PD/467**	Girling	**PD/334**	Girling	Discos Sólidos
A4 1.9 Tdi (Respaldo 15mm)	97 /	**PD/466**	Girling	**PD/334**	Girling	Discos Ventilados
A4 1.9 Tdi (Respaldo 8,7mm)	97 /	**PD/443**	Girling	**PD/362**	Girling	Discos Sólidos
A4 1.9 TDI QUATTRO (8E2/B6)	11-00 /	**PD/525-A**	Teves	**PD/362**	Girling	
A4 1.9 TDI QUATTRO (B5/8D)	11-94 / 09-01	**PD/525-A**	Teves	**PD/362**	Girling	
A4 2.0 (8E2/B6)	11-00 /	**PD/525-A**	Teves	**PD/362**	Girling	
A4 2.0 FSI (8E2/B6)	07-02 /	**PD/525-A**	Teves	**PD/362**	Girling	
A4 2.0 TDi	11-04 / 10-07			**PD/1030**	Lucas	
A4 2.0 TFSi	11-04 / 10-07			**PD/1030**	Lucas	
A4 2.0 TFSi QUATTRO	11-04 / 10-07			**PD/1030**	Lucas	
A4 2.0i	11-04 / 10-07			**PD/1030**	Lucas	
A4 2.4 (8E2/B6)	09-01 /	**PD/525-A**	Teves	**PD/362**	Girling	
A4 2.4 (B5/8D)	11-94 / 09-01	**PD/525-A**	Teves	**PD/362**	Girling	
A4 2.4 30V	97 /	**PD/384-A**	Teves	**PD/362**	Girling	
A4 2.4 CONVERSÍVEL	04-02 /	**PD/525-A**	Teves	**PD/362**	Girling	
A4 2.4 QUATTRO (B5/8D)	11-94 / 09-01	**PD/525-A**	Teves	**PD/362**	Girling	
A4 2.5 TDI	11-04 / 10-07			**PD/1030**	Lucas	
A4 2.5 TDI (B5/8D)	11-94 / 09-01	**PD/525-A**	Teves	**PD/362**	Girling	
A4 2.5 TDI (8E2/B6)	11-00 /	**PD/525-A**	Teves	**PD/362**	Girling	
A4 2.5 TDI CONVERSÍVEL	08-02 /	**PD/525-A**	Teves	**PD/362**	Girling	
A4 2.5 TDI QUATTRO (8E2/B6)	11-00 /	**PD/525-A**	Teves	**PD/362**	Girling	
A4 2.5 TDI QUATTRO (B5/8D)	11-94 / 09-01	**PD/525-A**	Teves	**PD/362**	Girling	
A4 2.6 (B5/8D)	11-94 / 09-01	**PD/525-A**	Teves	**PD/362**	Girling	
A4 2.6 QUATTRO (B5/8D)	11-94 / 09-01	**PD/525-A**	Teves	**PD/362**	Girling	
A4 2.7 TDi	11-04 / 10-07			**PD/1030**	Lucas	
A4 2.7 V6 24V TDI	07 /	**PD/1454**				
A4 2.8	94 /	**PD/384-A**	Teves	**PD/334**	Girling	Importado
A4 2.8 (B5/8D)	11-94 / 09-01	**PD/525-A**	Teves	**PD/362**	Girling	
A4 2.8 QUATTRO (B5/8D)	11-94 / 09-01	**PD/525-A**	Teves	**PD/362**	Girling	
A4 3.0 (8E2/B6)	11-00 /	**PD/525-A**	Teves	**PD/362**	Girling	
A4 3.0 CONVERSÍVEL	04-02 /	**PD/525-A**	Teves	**PD/362**	Girling	
A4 3.0 QUATTRO CONVERSÍVEL	05-03 /	**PD/525-A**	Teves	**PD/362**	Girling	
A4 3.0 QUATTRO (8E2/B6)	11-00 /	**PD/525-A**	Teves	**PD/362**	Girling	
A4 3.0 TDi	11-04 / 10-07			**PD/1030**	Lucas	
A4 3.2l V6 24V FSI	07 /	**PD/1454**				
A4 AVANT	98 / 00	**PD/384-A**		**PD/334**		
A4 AVANT 1.8i T	11-04 / 10-07			**PD/1030**	Lucas	

MODEL / *MODELO*	YEAR - *AÑO*	FRONT *DELANTERA*	SYSTEM *SISTEMA*	REAR *TRASERA*	SYSTEM *SISTEMA*	OBS.
AUDI						
A4 AVANT 1.8i T QUATTRO	11-04 / 10-07			**PD/1030**	Lucas	
A4 AVANT 2.0 TDi	11-04 / 10-07			**PD/1030**	Lucas	
A4 AVANT 2.0 TFSi	11-04 / 10-07			**PD/1030**	Lucas	
A4 AVANT 2.0 TFSi QUATTRO	11-04 / 10-07			**PD/1030**	Lucas	
A4 AVANT 2.0i	11-04 / 10-07			**PD/1030**	Lucas	
A4 AVANT 2.0i	11-04 / 10-07			**PD/1030**	Lucas	
A4 AVANT 2.5 TDi	11-04 / 10-07			**PD/1030**	Lucas	
A4 AVANT 2.7 TDi	11-04 / 10-07			**PD/1030**	Lucas	
A4 AVANT 3.0 TDi	11-04 / 10-07			**PD/1030**	Lucas	
A4 Quatro (Respaldo 15mm)	97 /	**PD/467**	Girling	**PD/334**	Girling	Discos Sólidos
A4 Quatro (Respaldo 15mm)	97 /	**PD/466**	Girling	**PD/334**	Girling	Discos Ventilados
A4 Quatro (Respaldo 8,7mm)	97 /	**PD/443**	Girling	**PD/362**	Girling	Discos Sólidos
A4 QUATTRO	05 / 06			**PD/592-B**		
A4 QUATTRO	07 /			**PD/1030**	Lucas	
A4 QUATTRO	98 / 00	**PD/384**		**PD/334**		
A4 QUATTRO	98 / 00	**PD/384-A**		**PD/334**		
A4 QUATTRO	01 / 04	**PD/525-A**		**PD/59**		
A4 QUATTRO 3.0 V6 24V TDI	08 /	**PD/1454**				
A4 QUATTRO 3.2 I V6 24 FSI	08 /	**PD/1454**				
A4 QUATTRO S4 3.0 V6 TFSI	08 /	**PD/1454**				
A4 RS4 2.7 BITURBO QUATTRO	00 / 01	**PD/1472**				
A5 3.0	08 /	**PD/1454**				
A5 3.2 FSI V6	08 /	**PD/1454**				
A6	05 / 06			**PD/592-B**		
A6	05 / 09			**PD/1030**	Lucas	
A6	97 / 00	**PD/384**		**PD/334**		
A6	97 / 00	**PD/384-A**		**PD/334**		
A6	00 /	**PD/525-A**		**PD/59**		
A6	01 /	**PD/384**		**PD/334**		
A6	01 /	**PD/384-A**		**PD/334**		
A6	05 / 09			**PD/1030**		
A6 (Respaldo 12mm)	94 /	**PD/336**	Girling	**PD/334**	Girling	Discos Sólidos
A6 (Respaldo 12mm)	97 /	**PD/336**	Girling	**PD/362**	Girling	Discos Sólidos
A6 1.8	94 /	**PD/384** **PD/384-A**	Teves			
A6 1.8T	01-97 /	**PD/525-A**	Teves	**PD/362**	Girling	
A6 1.8T QUATTRO	01-97 /	**PD/525-A**	Teves	**PD/362**	Girling	
A6 1.9 TDI	01-97 /	**PD/525-A**	Teves	**PD/362**	Girling	
A6 2.0	08-01 /	**PD/525-A**	Teves	**PD/362**	Girling	
A6 2.0 TDi	05-04 /			**PD/1030**	Lucas	
A6 2.0 TFSi	05-04 /			**PD/1030**	Lucas	
A6 2.4	02-97 /	**PD/525-A**	Teves	**PD/362**	Girling	
A6 2.4 QUATTRO	02-97 /	**PD/525-A**	Teves	**PD/362**	Girling	
A6 2.4i	05-04 /			**PD/1030**	Lucas	
A6 2.4i QUATTRO	05-04 /			**PD/1030**	Lucas	
A6 2.5 TDI	02-97 /	**PD/525-A**	Teves	**PD/362**	Girling	
A6 2.5 TDI QUATTRO	07-97 /	**PD/525-A**	Teves	**PD/362**	Girling	
A6 2.7i QUATTRO	05-04 /			**PD/1030**	Lucas	
A6 2.8	94 /	**PD/384-A**	Teves	**PD/334**	Girling	Importado
A6 2.8	02-97 /	**PD/525-A**	Teves	**PD/362**	Girling	
A6 2.8 FSi QUATTRO	05-04 /			**PD/1030**	Lucas	
A6 2.8 QUATTRO	02-97 /	**PD/525-A**	Teves	**PD/362**	Girling	
A6 3.0 TDi QUATTRO	05-04 /			**PD/1030**	Lucas	
A6 3.0i QUATTRO	05-04 /			**PD/1030**	Lucas	

MODEL / *MODELO*	YEAR - *AÑO*	FRONT *DELANTERA*	SYSTEM *SISTEMA*	REAR *TRASERA*	SYSTEM *SISTEMA*	OBS.
AUDI						
A6 3.2 FS	05-04 /			**PD/1030**	Lucas	
A6 3.2 FSi	05-04 /			**PD/1030**	Lucas	
A6 ALLROAD 2.7 TDi QUATTRO	05-06 /			**PD/1030**	Lucas	
A6 ALLROAD 3.0 TDi QUATTRO	05-06 /			**PD/1030**	Lucas	
A6 ALLROAD 3.2 FSi QUATTRO	05-06 /			**PD/1030**	Lucas	
A6 ALLROAD 4.2 FSi QUATTRO	05-06 /			**PD/1030**	Lucas	
A6 AVANT 2.0 TDi	05-04 /			**PD/1030**	Lucas	
A6 AVANT 2.0 TFSi	05-04 /			**PD/1030**	Lucas	
A6 AVANT 2.4i	05-04 /			**PD/1030**	Lucas	
A6 AVANT 2.4i QUATTRO	05-04 /			**PD/1030**	Lucas	
A6 AVANT 2.7i QUATTRO	05-04 /			**PD/1030**	Lucas	
A6 AVANT 2.8 FSi QUATTRO	05-04 /			**PD/1030**	Lucas	
A6 AVANT 3.0 TDi QUATTRO	05-04 /			**PD/1030**	Lucas	
A6 AVANT 3.0i QUATTRO	05-04 /			**PD/1030**	Lucas	
A6 AVANT 3.2 FS	05-04 /			**PD/1030**	Lucas	
A6 AVANT 3.2 FSi	05-04 /			**PD/1030**	Lucas	
A6 QUATTRO	05 / 06			**PD/592-B**		
A6 QUATTRO	05 / 09			**PD/1030**	Lucas	
A6 QUATTRO	97 / 00	**PD/1034**		**PD/334**		
A6 QUATTRO	98 / 01	**PD/384** **PD/384-A**		**PD/59**		
A6 QUATTRO	02 /	**PD/525-A**		**PD/59**		
A6 QUATTRO	03 / 04			**PD/59**		
A6 QUATTRO	03 / 04	**PD/1055**		**PD/59**		
A6 QUATTRO	05 / 06			**PD/1030**		
A6 QUATTRO V6	12 /	**PD/1374**				
A6, S6 5.2l V10 / AVANT	06 /	**PD/1449-A**				
A8	97 / 00	**PD/384** **PD/384-A**		**PD/334**		
A8	01 /	**PD/525-A**		**PD/59**		
A8 (Respaldo 12mm)	94 /	**PD/336**	Girling	**PD/334**	Girling	Discos Sólidos
A8						
A8 QUATTRO	04 /			**PD/592-B**		
A8 QUATTRO	97 / 01	**PD/384** **PD/384-A**		**PD/334**		
A8 QUATTRO	05 / 09			**PD/592-B**		
ALLROAD QUATTRO	01 / 02			**PD/59**		
ALLROAD QUATTRO	03 /	**PD/1055**		**PD/59**		
ALLROAD QUATTRO 3.2 FSi	05-06 /			**PD/1030**	Lucas	
ALLROAD QUATTRO 4.2 Fsi	05-06 /			**PD/1030**	Lucas	
AUDI 80	94 / 99	**PD/336**	Girling	**PD/334**	Girling	
AUDI 90 (Respaldo 12mm)	94 /	**PD/329**	Girling	**PD/334**	Girling	Discos Ventilados
AUDI 100	93 / 95	**PD/384** **PD/384-A**	Teves	**PD/334**	Girling	Importado
CABRIOLET	97 / 98	**PD/1034**		**PD/334**		
CABRIOLET (Respaldo 12mm)	94 /	**PD/336**	Girling	**PD/334**	Girling	Discos Sólidos
CABRIOLET (Respaldo 15mm)	97 /	**PD/467**	Girling	**PD/334**	Girling	Discos Sólidos
CABRIOLET (Respaldo 15mm)	97 /	**PD/466**	Girling	**PD/334**	Girling	Discos Ventilados
COUPÉ (Respaldo 12mm)	94 /	**PD/329**	Girling	**PD/334**	Girling	Discos Ventilados
RS 4	07 /			**PD/592-B**		
RS 5	07 /			**PD/592-B**		
RS 6	03 / 04			**PD/592-B**		
S3	00 /	**PD/384**		**PD/334**		
S4	04 / 06			**PD/592-B**		
S4	00 / 01			**PD/59**		

MODEL / *MODELO*	YEAR - *AÑO*	FRONT *DELANTERA*	SYSTEM *SISTEMA*	REAR *TRASERA*	SYSTEM *SISTEMA*	OBS.
AUDI						
S4	02 / 03	**PD/525-A**		**PD/59**		
S6	02 / 04	**PD/1055**		**PD/59**		
TT	09 /	**PD/1000-B**	Teves	**PD/1030**	Lucas	
TT	00 / 06	**PD/384**		**PD/59**		
TT	08 /			**PD/1030**		
TT 1.8 20V	99 /	**PD/58 PD/58-B**	Teves			
TT 1.8i T ROADSTER	98 /	**PD/340-B**	Teves	**PD/362**	Girling	
TT 2.0 TFSi	01-06 /			**PD/1030**	Lucas	
TT 2.0 TURBO	08 /			**PD/1030**	Lucas	
TT 3.2 V6 QUATTRO	01-06 /			**PD/1030**	Lucas	
TT QUATTRO	10 /	**PD/1000-B**	Teves	**PD/1030**	Lucas	
TT QUATTRO	00 / 02	**PD/384**		**PD/59**		
TT QUATTRO	03 /	**PD/340-B**		**PD/59**		
TT QUATTRO	08 /			**PD/1030**		
TT QUATTRO S	09 /	**PD/1000-B**	Teves	**PD/1030**	Lucas	
AWD						
MTL 33.27 - 8x6 Multi-Drives	91 / 06-92	**19071 00**		**19071 00**		
MTM 40.30 - 8x8 Multi-Drives	90 /	**19921 00**		**19921 00**		
TJ 850 / 940 / 1090	91 /	**17479/566 00**		**17479/566 00**		
TL 13.14 / 13.16	88 / 90	**17479/566 00**		**17713/714 00**		
TL 17.18	88 / 06-92	**19921 00**		**19921 00**		
TL 17.27	91 / 06-92	**19071 00**		**19071 00**		
TL 24.27 - 6x4 Rigids & Tippers	91 / 06-92	**19071 00**		**19090 00**		
TL 7.14	89 / 91	**PD/154**	Meritor	**PD/154**	Meritor	
TL 7.14 / 8.14 / 9.14	88 / 06-92	**15280/281 00**		**17229/230 00**		
TL 8.14	89 / 91	**PD/154**	Meritor	**PD/154**	Meritor	
TL 9.14	89 / 91	**PD/154**	Meritor	**PD/154**	Meritor	
AXLES & BRAKES MANUFACTURERS						
DANA		**F/803**		**F/804**		
FANGSHENG		**F/803**		**F/804**		
HENGLI		**F/803**		**F/804**		
AYATS						
ATLANTIS SERIES	02 /	**PD/116**	Knorr	**PD/116**	Knorr	
BRAVO SERIES	02 /	**PD/116**	Knorr	**PD/116**	Knorr	
BEDFORD						
BUS BLP (Rear Engine)	77 / 87	**19072 00**		**19072 00**		
BUS YLQ	75 / 87	**19072 00**		**19072 00**		
BUS YMQ	83 / 87	**19072 00**		**19072 00**		
BUS YMT / YNT	75 / 87	**19111 00**		**19371 00**		
BUS YRT	72 / 87	**19111 00**		**19371 00**		
KF / KG / KH 4x2 Tractors	69 / 87	**17479/566 00**		**17713/714 00**		
KM	66 / 87	**19111 00**		**19371 00**		
M 1120 4x4	77 / 87	**17479/566 00**		**17713/714 00**		
TJ 1090	77 / 87			**17713/714 00**		
TK 1260 / 1630 KFA / 1930 KFA	77 / 87	**17479/566 00**		**17713/714 00**		
TK 1630	77 / 87	**19111 00**		**19371 00**		
TL 1260 DOR / 1630 DOQ / 1670 DOQ / 1930 DOR	80 / 87	**17479/566 00**		**17713/714 00**		
TL 1630 DMY8	80 / 87	**19371 00**		**19371 00**		
TL 1630 DOV	80 / 87	**19111 00**		**19371 00**		

MODEL / *MODELO*	YEAR - *AÑO*	FRONT *DELANTERA*	SYSTEM *SISTEMA*	REAR *TRASERA*	SYSTEM *SISTEMA*	OBS.
BEDFORD						
TL 24-27	02-93 /	**19071 00**		**19090 00**		19090 00 2nd rear axle
TM 1500	74 / 87	**19111 00**		**19111 00**		
TM 1700	74 / 87	**19111 00**		**19371 00**		
TM 2250 6x2/6x4 / TM 2600	74 / 87	**19111 00**		**19371 00**		19371 00 2nd rear axle
TM 2300	77 / 87	**19072 00**		**19351 00**		
TM 2500	77 / 87	**19371 00**		**19371 00**		
TM 3250	74 / 87	**19371 00**		**19371 00**		
BERGISCHE ACHSEN (BPW)						
300 x 150,0 mm (SN 3015)				**19573 00**		3rd Generation Cam Brake
300 x 200,0 mm (SN 3020)				**19574 00**		3rd Generation Cam Brake
360 x 160,0 mm (SN 3616)				**19952/953 00**		
360 x 200,0 mm (SN 3620)				**19902/903 00**		
420 x 160,0 mm (SN 4216)				**19200 00**		S-Cam Brake
420 x 180,0 mm (SN 4218)				**19032 00**		S-Cam Brake
420 x 180,0 mm (SN 4218)				**19032 97**		S-Cam Brake
420 x 200,0 mm (SN 4220)				**19094 00**		S-Cam Brake
420 x 200,0 mm (SN 4220)				**19094 97**		S-Cam Brake
420 x 220,0 mm				**19591 00** **19825 00**		
BISELLI						
CARRETA	/ 78			**4515** **4515-G**		
CARRETA	78 /			**CA/32**	Master	
BMW						
316 i	90 /	**PD/385**	Teves	**PD/488**	Teves	
M3 4.0	07 /	**PD/1452**		**PD/1473**		
M5 5.0	04 / 10	**PD/1452**		**PD/1473**		
M6 5.0	05 /	**PD/1452**		**PD/1473**		
316 i Compact	94 / 99	**PD/385**	Teves	**PD/488**	Teves	
318 Diesel	94 / 99	**PD/385**	Teves	**PD/488**	Teves	
318 Diesel Compact	94 / 99	**PD/385**	Teves	**PD/488**	Teves	
318 i	90 / 99	**PD/385**	Teves	**PD/488**	Teves	
318 i Compact	94 / 99	**PD/385**	Teves	**PD/488**	Teves	
320 i	90 /	**PD/385**	Teves	**PD/488**	Teves	
330i	98 /	**PD/1003**	Teves			
330i	01 / 05	**PD/1044**				
330 CI 24V	00 /	**PD/1044**		**PD/1038**		
330 Xi	01 / 05	**PD/1044**				
518i	88 / 95	**PD/1003**	Teves			
520i	88 / 97	**PD/1003**	Teves			
525 i 2.5L	02 / 03			**PD/488**		
525i	88 / 95	**PD/1003**	Teves			
525i	01 / 03	**PD/1044**				
525I 3.0	07 / 10	**PD/1452**		**PD/1473**		
525 TD	91 / 97	**PD/1003**	Teves			
528i	91 / 97	**PD/1003**	Teves			
528i	99 / 00	**PD/1044**				
530i	91 / 97	**PD/1003**	Teves			
530I 3.0	07 / 10	**PD/1452**		**PD/1473**		
530 i 4.4L	01 / 03	**PD/1042-A**		**PD/488**		
540i	91 / 97	**PD/1003**	Teves			
540i	00 / 03	**PD/1042-A**	Teves			

MODEL / *MODELO*	YEAR - *AÑO*	FRONT *DELANTERA*	SYSTEM *SISTEMA*	REAR *TRASERA*	SYSTEM *SISTEMA*	OBS.
BMW						
540 TD	88 / 95	**PD/1003**	Teves			
540I 3.0	05 / 10	**PD/1452**		**PD/1473**		
540 i 4.4L	97 / 03	**PD/1042-A**		**PD/488**		
545I 4.4	04 / 10	**PD/1452**		**PD/1473**		
645I 4.4	03 /	**PD/1452**		**PD/1473**		
725 TDS	05-94 / 11-01			**PD/1038**		
728i	05-94 / 11-01			**PD/1038**		
728i L	05-94 / 11-01			**PD/1038**		
730i	86 / 94	**PD/1003**	Teves			
735	86 / 94	**PD/1003**	Teves			
740	86 / 94	**PD/1003**	Teves			
740 D	94 / 01	**PD/1472**				
740 i 4.4L	00 / 01	**PD/1042-A**		**PD/488**		
740 il 4.4L	98 / 01	**PD/1042-A**		**PD/488**		
745I 4.4	01 / 08	**PD/1452**		**PD/1473**		
M3	92 /	**PD/1003**	Teves			
M3	03 / 06	**PD/1044**				
M3 2.0L	95 / 98	**PD/1003**		**PD/488**		
M3 3.2L	03 / 06	**PD/1044**		**PD/1038**		
M3 3.3L	99 / 02	**PD/1003**		**PD/1038**		
M3 CABRIO	92 /	**PD/1003**	Teves			
M3 CABRIO	00 /			**PD/1038**		
M3 COUPE	92 /	**PD/1003**	Teves			
M3 COUPE	00 /			**PD/1038**		
M4	01 / 06			**PD/1038**		
M5	99 / 00	**PD/1042-A**		**PD/1038**		
M5	88 /	**PD/1003**	Teves			
M5	98 /			**PD/1038**		
SERIE 1 (E81/87) 116i 1.6	04 /	**PD/1302**	TRW	**PD/1451**		
SERIE 1 (E81/87) 118D 2.0	04 /	**PD/1302**	TRW	**PD/1451**		
SERIE 1 (E81/87) 118i 2.0	04 /	**PD/1302**	TRW	**PD/1337**		
SERIE 1 (E81/87) 120i 2.0	04 /	**PD/1302**	TRW	**PD/1337**		
SERIE 1 120i 3.0 24V	05 /			**PD/1337**		
SERIE 1 (87) 120 / 130	04 /			**PD/1451**	Lucas	
SERIE 3 (E36)	91 / 99	**PD/385**	Teves	**PD/488**	Teves	
SERIE 3 (E91)	06 /	**PD/1370**				
SERIE 3 320I 2.0 24V	05 /			**PD/1337**		
SERIE 3 325I 2.5 24V	05 /			**PD/1337**		
SERIE 3 330I 3.0 24V	05 /			**PD/1337**		
SERIE 5	03 /	**PD/1042-A**	Teves	**PD/1448**		
SERIE 5	10 /			**PD/1466**		
SERIE 7	03 /	**PD/1042-A**	Teves	**PD/1448**		
SERIE 7 725 TDS	95 / 01	**PD/1471**	Brembo			
SERIE 7 728I/IL	95 / 01	**PD/1471**	Brembo			
SERIE 7 730 D	95 / 01	**PD/1471**	Brembo			
SERIE 7 730I/IL	94 / 01	**PD/1471**	Brembo			
SERIE 7 735I/IL	96 / 01	**PD/1471**	Brembo			
SERIE 7 750I	94 / 01	**PD/1472**				
SERIE 7 750I/IL	94 / 01	**PD/1472**				
SERIE 8 840 CI	94 / 99	**PD/1471**	Brembo			
SERIE 8 840 CI	96 / 01	**PD/1471**	Brembo			
X1 SDRIVE 28I	13 /	**PD/1370**		**PD/1337**		
X1 XDRIVE 28I	12 / 14	**PD/1370**		**PD/1337**		
X1 XDRIVE 35I	12 / 13	**PD/1370**				

MODEL / *MODELO*	YEAR - *AÑO*	FRONT *DELANTERA*	SYSTEM *SISTEMA*	REAR *TRASERA*	SYSTEM *SISTEMA*	OBS.
BMW						
X3	04 / 10	**PD/1044**				
X3	04 / 09	**PD/1044**		**PD/1038**		
X5	00 / 01	**PD/1042-A**		**PD/1038**		
X5 3.0 TDS / 4.4	04-00 / 12-02	**PD/1042-A**	Teves	**PD/1038**		
X5 3.0	04-00 /	**PD/1042-A**	Teves	**PD/1038**		
X5 3.0	07 /	**PD/1452**		**PD/1473**		
X5 4.8	04 / 07			**PD/1038**		
X5	09 /			**PD/1448**		
X5 (E70) 4.8	07 /	**PD/1458**				
X6	09 /			**PD/1448**		
X6 4.8	07 /	**PD/1452**		**PD/1473**		
X6 XDRIVE 50I	08 /09			**PD/1473**		
X6 XDRIVE 50I 4.4 BM	09 /			**PD/1473**		
Z3 COUPE M 3.2i	97 /	**PD/1003**	Teves			
Z3 ROADSTER 1.9	96 /	**PD/385**	Teves	**PD/488**	Teves	
Z3 ROADSTER 3.2i	96 /	**PD/1003**	Teves			
Z3 2.8	97 /	**PD/385**	Teves	**PD/488**	Teves	
Z3 2.0 / 2.8	98 / 00	**PD/1069**	Girling			
Z3 3.0	00 / 02	**PD/1069**	Girling			
Z3	96 / 02	**PD/385**		**PD/488**		
Z3 2.8	97 /	**PD/385**	Teves	**PD/488**	Teves	
Z3 M	98 / 02			**PD/488**		
Z3 Roadster 1.9	96 /	**PD/385**	Teves	**PD/488**	Teves	
Z4 3.0L	03 / 07	**PD/385**		**PD/716**		
Z4 3.0 SI	06 / 08	**PD/1044**				
Z4 M 3.2L	07 / 09	**PD/1044**		**PD/1038**		
Z4 M	06 / 08	**PD/1044**		**PD/1038**		
Z8 4.9I	00 /	**PD/1472**				
BPW						
ECO MAX SB/SN6 (SB 3745) - K SERIES	/ 04-03			**PD/120**	Knorr	
ECO MAX SB/SN6 (SB 3745) - K SERIES	05-03 /			**PD/142**	Knorr	
ECO PLUS SB/SN6 (SB 3745) 19.5" WHEEL - AIR BRAKE	05-03 /			**PD/142**	Knorr	
ECO PLUS SB/SN6 (SB 3745) 19.5" WHEEL - AIR BRAKE	/ 04-03			**PD/120**	Knorr	
ECO PLUS SB/SN6 (SB 3745) 19.5" WHEEL - AIR BRAKE	05-03 /			**PD/142**	Knorr	
ECO PLUS SB/SN7 (SB 4345) 22.5" WHEEL - AIR BRAKE	05-03 /			**PD/141**	Knorr	
ECO PLUS SB/SN7 (SB 4345) 22.5" WHEEL - AIR BRAKE	/ 04-03			**PD/116**	Knorr	
ECO PLUS SK7 (SB 4309)	05-03 /			**PD/147**	Knorr	
SH SERIES SB/SN7 (SB 4345) - HD	/ 04-03			**PD/116**	Knorr	
SH SERIES SB/SN7 (SB 4345) - HD	05-03 /			**PD/141**	Knorr	
SKH SERIES SB / SN6 (SB 3745) - UNI-DISC	05-03 /			**PD/142**	Knorr	
SKH SERIES SB / SN6 (SB 3745) - UNI-DISC	/ 04-03			**PD/120**	Knorr	
BPW Brake 420x200mm				**F/1072**		
BPW Brake 420x180mm				**F/1128**		
BOVA						
FUTURA (2 axles) - FHD / FLD SERIES	95 /	**PD/116**	Knorr			
FUTURA (3 axles) - FHD / FLD SERIES	95 /	**PD/116**	Knorr	**PD/116**	Knorr	
FUTURA FHD 10-290 / 10-300	01-90 / 12-94	**PD/175**	Knorr			
FUTURA FHD 10-290 / 10-300	86 / 89	**19890/891 00**		**19890/891 00**		
FUTURA FHD 10-290 / 10-300	01-90 / 12-94	**PD/176**	Knorr			
FUTURA FHD 10-300	83 / 85	**19150/151 00**		**19256/260 00**		DAF-Chassis
FUTURA FHD 12-220 / 12-290 / 12-360	83 / 85	**19150/151 00**		**19256/260 00**		DAF-Chassis

MODEL / *MODELO*	YEAR - *AÑO*	FRONT *DELANTERA*	SYSTEM *SISTEMA*	REAR *TRASERA*	SYSTEM *SISTEMA*	OBS.
BOVA						
FUTURA FHD 12-290 / 12-360 / 12-370	86 / 89	**19890/891 00**		**19890/891 00**		
FUTURA FHD 12-290 / 12-360 / 12-370	01-90 / 12-94	**PD/175**	Knorr			
FUTURA FHD 12-290 / 12-360 / 12-370	01-90 / 12-94	**PD/176**	Knorr			
FUTURA FHM 12-290	01-83 / 12-94			**MB/76/77/2**		
FUTURA FHM 12-290	01-83 / 12-94			**19707/581 00**		
FUTURA FHM 12-290 / FHM 12-360	83 / 94	**19579/580 00**		**19581/582 00**		Mercedes-Chassis
FUTURA FHM 12-360	01-83 / 12-94			**19707/581 00**		
FUTURA FHM 12-360	01-83 / 12-94			**MB/76/77/2**		
FUTURA FVD 12-220 / 12-270	86 / 89	**19890/891 00**		**19890/891 00**		
FUTURA FVD 12-220 / 12-270	01-90 / 12-94	**PD/175**	Knorr			
FUTURA FVD 12-220 / 12-270	01-90 / 12-94	**PD/176**	Knorr			
FUTURA FVD 12-220 / FVD 12-270	83 / 85	**19150/151 00**		**19256/260 00**		DAF-Chassis
MAGIQ	96 /	**PD/116**	Knorr	**PD/116**	Knorr	
BUICK						
ALLURE	08 / 09	**PD/814**		**PD/677**		
CENTURY	83 / 96	**PD/499**	Bendix			
CENTURY	82 / 89	**PD/540**				
CENTURY	97 / 99	**PD/540**				
ELECTRA	85 / 90	**PD/499**	Bendix			
ESTATE WAGON	90	**PD/774**				
LACROSSE SUPER	08 / 09	**PD/814**		**PD/677**		
LESABRE	92 / 93	**PD/609**				
LESABRE	00 / 05	**PD/564**				
LESABRE	86 / 91	**PD/499**	Bendix			
LESABRE WAGON	90	**PD/774**				
LUCERNE	06 / 10	**PD/814**				
PARK AVENUE 3.8L	94 / 96	**PD/564**		**PD/688**		
PARK AVENUE	91 / 93	**PD/609**				
REGAL 3.8L	94 / 96	**PD/519**				
REGAL 3.8L	97 /	**PD/564**		**PD/564**		
REGAL USA 3.8L	88 / 93	**PD/519**				
RIVIERA	92 / 93	**PD/609**				
RIVIERA 3.8L	95 / 96	**PD/697**		**PD/688**		
RIVIERA 3.8L	98 / 99	**PD/564**		**PD/688**		
ROADMASTER	92 / 96	**PD/774**				
ROADMASTER WAGON	91 / 96	**PD/774**				
SKYHAWK	85 / 89	**PD/540**				
SKYLARK	86 / 90	**PD/546**				
SKYLARK	81 / 85	**PD/540**				
SKYLARK	96 / 98	**PD/508**	Kelsey Hayes			
SOMEREST	85 /88	**PD/540**				
CADILLAC						
ALLANT	93	**PD/609**				
CATERA 3.0L	97 / 01			**PD/38**	Teves	
CIMARRON	85 / 88	**PD/546**				
CONCOURS	98 / 99	**PD/502**	Bendix			HD Brakes
CONCOURS	97 / 99	**PD/564**				
CTS 3.5L	03 / 07	**PD/747**		**PD/792**		
DEVILLE	85 / 90	**PD/499**	Bendix			
DEVILLE	90 / 05	**PD/502**	Bendix			HD Brakes
DEVILLE	00 / 05	**PD/571**				
DEVILLE	97 / 04	**PD/564**		**PD/709**		

MODEL / *MODELO*	YEAR - *AÑO*	FRONT *DELANTERA*	SYSTEM *SISTEMA*	REAR *TRASERA*	SYSTEM *SISTEMA*	OBS.
CADILLAC						
DEVILLE	05 /	**PD/571**		**PD/709**		
DEVILLE / CONCOURS	94 / 96	**PD/697**		**PD/709**		
DEVILLE 4.9L	91 / 93	**PD/609**				
DTS	06 /	**PD/571**				Heavy Duty
DTS	06 / 10	**PD/814**				
ELDORADO	94 / 96	**PD/697**		**PD/709**		
ELDORADO	97 /	**PD/564**		**PD/709**		
ELDORADO	92 / 93	**PD/609**				
ESCALADE	99	**PD/548**				
ESCALADE	99 / 06	**PD/502**	Bendix			
ESCALADE	02	**PD/572**				
ESCALADE 4WD	03 / 06			**PD/760**		
ESCALADE 4WD / RWD	03 / 06	**PD/572**				
ESCALADE 4X2	04 / 06	**PD/572**		**PD/589**		
ESCALADE 4X2	07 / 09	**PD/594**		**PD/731**		
ESCALADE 4X4	02 / 06	**PD/572**		**PD/578**		
ESCALADE 4X4	07 / 09	**PD/594**		**PD/731**		
ESCALADE ESV	03 / 06	**PD/572**		**PD/578**		
ESCALADE ESV	07 / 09	**PD/594**		**PD/731**		
ESCALADE EXT	03 / 06	**PD/572**		**PD/578**		
ESCALADE EXT	07 / 09	**PD/594**		**PD/731**		
ESCALADE RWD	03 / 06			**PD/589**		
FLEETWOOD	85 / 90	**PD/499**	Bendix			
FLEETWOOD	90 / 93	**PD/502**	Bendix			HD Brakes
FLEETWOOD	86 / 96	**PD/774**				
FLEETWOOD RWD	85	**PD/774**				
LIMOUSINE	91 / 93	**PD/502**	Bendix			
SEVILLE	92 / 93	**PD/609**				
SEVILLE	94 / 96	**PD/697**		**PD/709**		
SEVILLE	97 /	**PD/564**		**PD/709**		
SEVILLE	98 / 01	**PD/564**		**PD/688**		
SEVILLE	03 / 04	**PD/1047**		**PD/1048**		
STS	05 / 08	**PD/747**		**PD/792**		
CALABRESE						
420 x 200,0 mm				**19094 00**		
CARDI						
300 x 200,0 mm				**19574 00**		
420 x 180,0 mm				**19032 00**		
420 x 180,0 mm				**19032 97**		
420 x 200,0 mm				**19094 00**		
420 x 200,0 mm				**19094 97**		
CARRIMORE						
419 x 219,1 mm				**19369/370 00**		
CASE						
PÁ CARREGADEIRA W-18	Todos	**PD/29**		**PD/29**		
PÁ CARREGADEIRA W-20 B	Todos	**PD/29**		**PD/29**		
CASTERA						
419 x 177,8 mm				**19036/037 00**		
419 x 203,2 mm				**19365/366 00**		

MODEL / *MODELO*	YEAR - *AÑO*	FRONT *DELANTERA*	SYSTEM *SISTEMA*	REAR *TRASERA*	SYSTEM *SISTEMA*	OBS.
CASTERA						
419 x 219,1 mm				**19369/370 00**		
CATERPILLAR						
				TR/328		4D 5759
				TR/354		8B 831 8B 832
				4480		3J 2503 3J 2504
				TR/330-S/F		5H 6030
				TR/339		4S 5149
PÁ CARREGADEIRA 930		**PD/29**		**PD/29**		2V 9135
PÁ CARREGADEIRA 966		**4601**		**4601**		5K0664
CHARGER						
CARRETA	95 /			**FD/81**		
CHANA						
CARGO / UTILITY / FAMILY	06 /	**PD/1330**				
CHERY						
FACE 1.3 16V	10 /	**PD/1330**				
QQ	11 /	**PD/598**	Akebono			
S-18 1.3 16V	12 /	**PD/1330**		**PD/629**		
CELER 1.5 16V	13/	**PD/1468**		**PD/629**		
CIELO 1.6 16V	10/	**PD/1468**		**PD/629**		
TIGGO 2.0 16V	13/	**PD/1468**		**PD/629**		
TIGGO 2.0 16V	10/	**PD/1468**		**PD/629**		
CHRYSLER						
300C	05 / 09	**PD/805** **PD/1020**		**PD/806**		
300C 3.5 V6	04 /			**PD/806**		
300C 6.1 V8	07 /	**PD/1020**				
300M	00 / 04	**PD/510**				
300M 3.5L	99 / 01	**PD/396**		**PD/701**		
300M 3.5L	02 / 04	**PD/134**		**PD/701**		
ASPEN	07 / 08	**PD/808**		**PD/759**		
CARAVAN	96 / 00	**PD/492**	K. Hayes			
CARAVAN	01 / 06	**PD/580**				
CARAVAN	01 / 07	**PD/581**		**PD/582**		
CHALLENGER	05 / 09	**PD/1020**		**PD/806**		
CHARGER 3.5L / 5.7L	06 / 09	**PD/805**		**PD/806**		
CHARGER POLICE 7.4L	06 / 08	**PD/1020**		**PD/806**		
CIRRUS	96 / 00	**PD/135**		**PD/392**		
CIRRUS	01 / 06	**PD/134**		**PD/392**		
CIRRUS	07 / 09			**PD/723**		
CIRRUS CONV 4.0L	98 / 04	**PD/469**		**PD/683**		
CIRRUS COUPE V6	98 / 04	**PD/469**		**PD/683**		
CONCORDE	98 / 04	**PD/510**				
CONCORDE	93 / 97	**PD/396**		**PD/392**		
CONCORDE	98 / 04	**PD/469**		**PD/392**		
CONCORDE	01 / 02	**PD/510**		**PD/392**		
CONCORDE	02 /	**PD/134**		**PD/392**		
CONCORDE USA	93 / 97	**PD/396**				
CORONADO	68 / 72	**PD/9**		**2012-B** **2012-BT**		

MODEL / *MODELO*	YEAR - *AÑO*	FRONT *DELANTERA*	SYSTEM *SISTEMA*	REAR *TRASERA*	SYSTEM *SISTEMA*	OBS.
CHRYSLER						
CORONADO	73 / 80	**PD/9**		**8020**		
CROSSFIRE SRT-6	04 /	**PD/1472**				
DART	83 / 89	**PD/543**				
DART DART K 600	84 / 85	**PD/543**				
DURANGO	00 / 02	**PD/623**		**FD/137-CP**		
DURANGO	03 / 04	**PD/758**				
GRAND CARAVAN	96 / 00	**PD/492**	K. Hayes			
GRAND CARAVAN	01 / 06	**PD/580**				
GRAND CARAVAN	01 / 07	**PD/581**		**PD/582**		
GRAND VOYAGER	96 / 00	**PD/396**				
GRAND VOYAGER	01 / 07	**PD/581**		**PD/582**		
GRAND VOYAGER	08 / 09	**PD/1026**		**PD/300**		
GRAND VOYAGER	11/			**PD/1350**		
JOURNEY SXT 2.7 V6 24V	13 /	**PD/1408**		**PD/1410**		
INTREPID	98 / 04	**PD/510**				
INTREPID V6	93 / 94	**PD/396**	K. Hayes			Rodado 16”
INTREPID V6	95 / 97	**PD/492**	K. Hayes			Rodado 16”
LE BARON K	83 / 87	**PD/543**				
LE BARON TURBO	92 / 95	**PD/553**				
LE BARON TURBO CON “15	92 / 95	**PD/553**				
LHS	98 / 02	**PD/510**				
MAGNUM	83 / 88	**PD/543**				
NEON	95 / 97	**PD/395**		**PD/392**		Rodado 13”
NEON	95 / 98	**PD/492**	K. Hayes	**PD/392**		Rodado 14”
NEON	99 / 05	**PD/510**				
NEON 1.8 16V (aro 14”)	95 / 98	**PD/492**	K. Hayes	**PD/392**	K. Hayes	Aro 14”
NEON 2.0 16V (aro 14”)	95 / 98	**PD/492**	K. Hayes	**PD/392**	K. Hayes	Aro 14”
NEON SRT-4	03 / 05	**PD/531**	Teves			
NEW YORKER	85 / 89	**PD/543**				
NEW YORKER	91 / 94	**PD/553**				
NEW YORKER / USA	94 / 97	**PD/396**				
NEW YORKER LH	94 / 95	**PD/396**		**PD/701**		
NEW YORKER LHS	96 / 98	**PD/396**		**PD/701**		
PACIFICA	04 / 08	**PD/763**		**PD/797**		
PHANTOM	87 / 89	**PD/543**				
PHANTOM	90 / 94	**PD/553**				
POLARA GT / GTX	68 / 80			**PD/9**		
POLARA	73 / 75	**PD/10**	Bendix			
PT CRUISER GT	06 /	**PD/531**	Teves			
PT CRUISER TURBO	03 / 04	**PD/531**	Teves			
PT CRUSIER	00 / 09	**PD/531**	Teves			
PT CRUSIER	00 / 07	**PD/531**		**PD/392**		
PT CRUSIER	05 / 09	**PD/531**		**PD/701**		
PT CRUSIER R/T	01 / 08	**PD/531**		**PD/701**		
SEBRING	01 / 05	**PD/134**		**PD/392**		
SEBRING CONV	96 / 00	**PD/135**		**PD/392**		
SEBRING CONV	01 / 04	**PD/134**		**PD/392**		
SEBRING R/T 4L	97 / 98	**PD/469**		**PD/683**		
SEBRING	03 / 05	**PD/631**				
SHADOW	89 / 90	**PD/543**				
SHADOW	91 / 94	**PD/504**				
SHADOW TURBO	89 / 91	**PD/504**				
SPIRIT R/T	95 /	**PD/553**		**PD/392**		
SPIRIT RIN 14”	89 / 90	**PD/543**				

MODEL / *MODELO*	YEAR - *AÑO*	FRONT *DELANTERA*	SYSTEM *SISTEMA*	REAR *TRASERA*	SYSTEM *SISTEMA*	OBS.
CHRYSLER						
SPIRIT RIN 14"	91 / 94	**PD/504**				
SPIRIT RIN 15"	91 / 94	**PD/553**				
SRT-4	03	**PD/510**				
STRATUS	95 / 00	**PD/135**	K. Hayes	**PD/392**	K. Hayes	
STRATUS	00 /	**PD/134**		**PD/392**	K. Hayes	
STRATUS CONVERSÍVEL	02	**PD/134**		**PD/392**	K. Hayes	
STRATUS COUPÉ	01 / 03	**PD/631**				
STRATUS R/T	04 / 05	**PD/631**				
TOWN & COUNTRY	01 / 06	**PD/580**				
TOWN & COUNTRY	01 / 07	**PD/581**		**PD/582**		
TOWN & COUNTRY	96 / 00	**PD/396**				
TOWN & COUNTRY	08 / 09	**PD/1026**		**PD/300**		
VALIANT III	64 / 77	**2051-A 2051-AT**		**2012-B 2012-BT**		
VALIANT IV	64 / 77	**2051-A 2051-AT**		**2012-B 2012-BT**		
VOLARE K	83 / 88	**PD/543**				
VOYAGER	96 / 00	**PD/396**				
VOYAGER	01 / 07	**PD/580**				
VOYAGER	01 / 08	**PD/581**		**PD/582**		
VOYAGER	86 / 90	**PD/568**				
VOYAGER RIN 14"	91 / 94	**PD/504**				
VOYAGER RIN 15"	91 / 94	**PD/504**				
VOYAGER USA	94 / 95	**PD/504**				
VOYAGER USA	94 / 95	**PD/553**				
CHEVROLET - UTILITARIOS Y CAMIONES						
6000	93 / 96	**PD/103**	Teves	**FD/72**	Bendix	
11000	85 / 96	**CB/53**	Bendix	**CB/54**	Bendix	Freno a aire
12000	85 / 87	**CB/53**	Bendix	**CB/54**	Bendix	Freno a aire
13000	87 / 96	**CB/53**	Bendix	**CB/54**	Bendix	Freno a aire
19000	85 / 90	**CB/53**	Bendix	**CB/54**	Bendix	3° eixo CB/54
21000	86 / 90	**CB/53**	Bendix	**CB/54**	Bendix	3° eixo CB/54
22000	85 / 90	**CB/53**	Bendix	**CB/54**	Bendix	3° eixo CB/54
12-170	97	**FD/86**		**4707**		
12-170	98 /	**FD/83**		**FD/84**		
14-190 KODIAK		**FD/83**		**FD/84**		
14-190 KODIAK	97	**FD/86**		**4707**		
15-190	97 / 98	**FD/86**		**4707**		
15-190	98 /	**FD/85**		**FD/84**		
16-220	97	**4524-B**		**4707**		
16-220		**FD/83**		**FD/84**		
350-Diesel 60	67 / 68	**9220**		**4596**		
350-Diesel 60	69 / 78	**9220**		**4596-B**		
ASTRO	93 / 02	**PD/774**				
ASTRO M	89	**PD/774**				
ASTRO M POWER	85 / 89	**PD/774**				
ASTRO VAN 2 WD	85 / 95	**PD/324**				
C-20 / C-20 Suburban	85 / 86	**PD/606**				
C-4500 KODIAT (DIH PB)	03 / 07	**PD/144**				
C-4500 KODIAT (DIH PB)	03 / 09			**PD178**		
C-5	02	**PD/144**				
C-5500 KODIAT	06 / 07	**PD/144**		**PD/144**		
C-5500 KODIAT	03	**PD/144**		**PD/144**		

MODEL / *MODELO*	YEAR - *AÑO*	FRONT *DELANTERA*	SYSTEM *SISTEMA*	REAR *TRASERA*	SYSTEM *SISTEMA*	OBS.
CHEVROLET - UTILITARIOS Y CAMIONES						
C-5500 KODIAT	06	**PD/144**		**PD/144**		
C-5500 KODIAT	08 /			**PD/144**		
C-5500 KODIAT	04 / 05	**PD/144**		**PD/144**		
C-5500 KODIAT	02	**PD/144**				
C-5500 KODIAT	04 / 09			**PD/178**		
CHEVROLET	50 / 60	**644**				
CORSA COMBO DIESEL	00 /			**8027**		
CRUZE Hatchback	12/	**PD/1514**			Bosch	
CRUZE 1.8 LT Flex	11/	**PD/1514**			Bosch	
D-MAX 3,5L	06 / 08	**PD/801**				
Express 3500	03 / 06			**PD/639**		
Express 3500 DRW	07			**PD/639**		
Express 3500 GVW 10000 Cutaway / GVW 8600 Cutaway	09			**PD/639**		
Express 3500 GVW 8600 Lbs.	08			**PD/639**		
G-30	85 / 96	**PD/606**				
K-20 / K-20 Suburban	85 / 86	**PD/606**				
P-20	85 / 89	**PD/606**				
P-30	85 / 93	**PD/606**				
R-1500 Suburban	90 / 91	**PD/606**				
R-20 / R-20 Suburban	87 / 88	**PD/606**				
R-2500 / R-2500 Suburban	89 / 91	**PD/606**				
R-30	88	**PD/606**				
TRACKER 1.8 LTZ	13/	**PD/1514**			Bosch	
TRAILBLAZER	13/			**PD/1498**		
R-3500	89	**PD/606**				
V-1500 Suburban	90 / 91	**PD/606**				
V-20 / V-20 Suburban	87 / 88	**PD/606**				
V-2500 Suburban	89 / 91	**PD/606**				
CITROEN						
3 CV FURGONETA	69 / 73	**9224-S/F**		**9240-S/F**		
3CV	69 / 73	**9224-S/F**		**9240-S/F**		
AIRCROSS EXCLUSIVE 1.6 16V	10 /	**PD/346**	Girling			
AIRCROSS GL 1.6 16V	10 /	**PD/346**	Girling			
AIRCROSS GLX 1.6 16V	10 /	**PD/346**	Girling			
AMERICA CARGA				**9240-S/F**		
AMERICA SUPER				**9240-S/F**		
AMI 8	69 / 73	**9224-S/F**		**9240-S/F**		
AX	90 / 97			**PG/203-CP**	Bendix	Freio traseiro Ø180x32mm
AX 1.4 i	93 /	**PD/363-A**	Girling			
AX GTI 1.4	91 /			**PG/203-CP**	Bendix	Freio traseiro Ø180x32mm
BERLINGO FURGON 1.8	98 /	**PD/411 PD/411-E**	Girling	**PE/172-CPA**	Girling	
BERLINGO FURGON 1.9 D	99 /	**PD/411 PD/411-E**	Girling	**PE/172-CPA**	Girling	
BERLINGO MULTISPACE 1.8	99 /	**PD/411 PD/411-E**	Girling	**PE/172-CPA**	Girling	
BERLINGO MULTISPACE 1.9 D	99 /	**PD/411 PD/411-E**	Girling	**PE/172-CPA**	Girling	
C-15 1.0 / 1.1 / 1.3/ 1.4 / 1.8 / 1.8 D	95 /	**PD/363-A**	Girling			
C-15 Furgón E 1.4 / 1.8 D	87 /	**PD/363-A**	Girling			
C2 1.1	03 /	**PD/648**	Girling			
C2 1.4	03 /	**PD/648**	Girling			
C2 1.4 HDi	03 /	**PD/648**	Girling			

MODEL / *MODELO*	YEAR - *AÑO*	FRONT *DELANTERA*	SYSTEM *SISTEMA*	REAR *TRASERA*	SYSTEM *SISTEMA*	OBS.
CITROEN						
C3 1.1i	02 /	**PD/648**	Girling	**CI/321-CPA**		Freio traseiro Ø203x39mm Disco Sólido
C3 1.4	04-02 /	**PD/514**	Girling	**CI/321-CPA**		Freio traseiro Ø203x39mm Disco Ventilado
C3 1.4 16V	12-03 /	**PD/514**	Girling			Disco Ventilado
C3 1.4 16V HDI	02-02 /	**PD/514**	Girling			Disco Ventilado
C3 1.4 HDi	02 /	**PD/648**	Girling	**CI/321-CPA**		Freio traseiro Ø203x39mm Disco Sólido
C3 1.4i	02 /	**PD/648**	Girling	**CI/321-CPA**		Freio traseiro Ø203x39mm Disco Sólido
C3 1.5 8V	13 /	**PD/85**	Teves	**CI/344-CPA**	Bosch	Freio traseiro Ø203x39mm
C3 1.6 16V	13 /	**PD/505**	Bosch	**CI/344-CPA**	Bosch	Freio traseiro Ø203x39mm
C3 1.6 16V	02-02 /	**PD/514**	Girling			Disco Ventilado
C4	05 /	**PD/353**	Bosch	**PD/362**	Girling	
C4 1.6 THP / 2.0 HDi	11-09 /	**PD/1000**				
C4 GLX 1.6 16V	09 /	**PD/505**	Bosch			
C4 GRAN PICASSO 2.0 HDi	07-09 /	**PD/1000**		**PD/1338**	Bosch	
C4 GRAN PICASSO 2.0 i 16V / 2.0 HDi	10-06 /	**PD/1000**		**PD/1338**	Bosch	
C4 LOUNG EXCLUSIVE 2.0 16V	13 /	**PD/1470**	Bosch	**PD/59**		
C4 LOUNG EXCLUSIVE 1.6 TURBO	13 /	**PD/1000**	Bosch	**PD/59**		
C4 LOUNG ORIGINE 2.0 16V	13 /	**PD/1470**	Bosch	**PD/59**		
C4 LOUNG TENDENCE 2.0 16V	13 /	**PD/1470**	Bosch	**PD/59**		
C4 LOUNG TENDENCE 1.6 TURBO	13 /	**PD/1000**	Bosch	**PD/59**		
C4 PALLAS	05 /	**PD/353**	Bosch	**PD/362**	Girling	
C4 PALLAS EXCLUSIVE 2.0 16V	05 /			**PD/1335**	Bosch	
C4 EXCLUSIVE PACK 2.0 16V	08 /			**PD/1335**	Bosch	
C4 PICASSO 2.0 HDi	07-09 /	**PD/1000**		**PD/1338**	Bosch	
C4 PICASSO 2.0 i 16V / 2.0 Hdi	02-07 /	**PD/1000**		**PD/1338**	Bosch	
C4 VTR	05 /	**PD/353**	Bosch	**PD/362**	Girling	
C5 1.6 16V	08 /	**PD/1301**	Teves			
C5 1.8 16V	08 /	**PD/1301**	Teves			
C5 1.8 16V	01 / 08	**PD/649-E**	Bosch	**PD/651**	Citroen	
C5 2.0 16V	08 /	**PD/1301**	Teves			
C5 2.0 16V	01 / 08	**PD/649-E**	Bosch	**PD/651**	Citroen	
C5 2.0 16V HPi	01 / 08	**PD/649-E**	Bosch	**PD/651**	Citroen	
C5 2.0 HDi	01 /	**PD/649-E**	Bosch	**PD/651**	Citroen	
C5 2.2 HDi	01 /	**PD/650-E**	Bosch	**PD/651**	Citroen	
C5 3.0 V6	01 /	**PD/650-E**	Bosch	**PD/651**	Citroen	
C5 Break 1.8 16V	01 /	**PD/649-E**	Bosch	**PD/651**	Citroen	
C5 Break 2.0 16V	01 /	**PD/649-E**	Bosch	**PD/651**	Citroen	
C5 Break 2.0 16V HPi	01 /	**PD/649-E**	Bosch	**PD/651**	Citroen	
C5 Break 2.0 HDi	01 /	**PD/649-E**	Bosch	**PD/651**	Citroen	
C5 Break 2.2 HDi	01 /	**PD/650-E**	Bosch	**PD/651**	Citroen	
C5 Break 3.0 V6	01 /	**PD/650-E**	Bosch	**PD/651**	Citroen	
C8 2.0	02 /	**PD/1443-A**	Girling			
C8 2.2	02 /	**PD/1443-A**	Girling			
DS3 1.6 TURBO 16V	12 /	**PD/346**	Girling	**PD/59**	Girling	
DS4 1.6 TURBO 16V	13 /	**PD/1000**	Teves	**PD/1445**		
DS4 1.6 HDI 16V	11 / 12	**PD/1422**	Ate			
DS5 1.6 TURBO 16V	13 /	**PD/1000**	Teves	**PD/1445**		
DS5 1.6 THP / 2.0HDi / 2.0 HDi HYBRID4 4x4	11-11 /	**PD/1000**				
EVASION 1.8 i	96 /	**PD/448-A**	Bendix			Con ABS
JUMPER 1.9 D / TD	94 / 02	**PD/358 PD/358-A**	Girling	**FI/170-CPA**	Girling	Aro 15"
JUMPER 2.0 i	94 / 02	**PD/358 PD/358-A**	Girling	**FI/170-CPA**	Girling	Aro 15"

MODEL / *MODELO*	YEAR - *AÑO*	FRONT *DELANTERA*	SYSTEM *SISTEMA*	REAR *TRASERA*	SYSTEM *SISTEMA*	OBS.
CITROEN						
JUMPER 2.0 i	94 / 02	**PD/422 PD/422-A**	Girling	**FI/199-CPA**	Girling	Aro 16"
JUMPER 2.5 D / TD	94 / 02	**PD/358 PD/358-A**	Girling	**FI/170-CPA**	Girling	Aro 15"
JUMPER 2.5 D / TD	94 / 02	**PD/422 PD/422-A**	Girling	**FI/199-CPA**	Girling	Aro 16"
JUMPER 2.5 Dti	96 / 02	**PD/422 PD/422-A**	Girling	**FI/199-CPA**	Girling	Aro 16"
JUMPER 2.8 Dhi	96 / 02	**PD/422 PD/422-A**	Girling	**FI/199-CPA**	Girling	Aro 16"
JUMPER 30 2.2	06 /	**PD/1099-B**	Brembo			
JUMPER 30 3.0 HDI	06 /	**PD/1099-B**	Brembo			
JUMPER 33 2.2	06 /	**PD/1099-B**	Brembo			
JUMPER 33 3.0 HDI	06 /	**PD/1099-B**	Brembo			
JUMPER SERIE 27	09-01 / 04	**PD/498-A**	Bosch	**PD/501**	Bosch	Freio de mão **FI/196-CP**
JUMPER SERIE 27	05 /	**PD/498-A**	Bosch	**PD/501**	Bosch	Freio de mão **FI/322-CP**
JUMPER SERIE 29	04-02 / 04	**PD/498-A**	Bosch	**PD/501**	Bosch	Freio de mão **FI/196-CP**
JUMPER SERIE 29	05 /	**PD/498-A**	Bosch	**PD/501**	Bosch	Freio de mão **FI/322-CP**
JUMPER SERIE 31	09-01 / 04	**PD/498-A**	Bosch	**PD/501**	Bosch	Freio de mão **FI/196-CP**
JUMPER SERIE 31	05 /	**PD/498-A**	Bosch	**PD/501**	Bosch	Freio de mão **FI/322-CP**
JUMPER SERIE 33	04-02 / 04	**PD/498-A**	Bosch	**PD/501**	Bosch	Freio de mão **FI/196-CP**
JUMPER SERIE 33	05 /	**PD/498-A**	Bosch	**PD/501**	Bosch	Freio de mão **FI/322-CP**
JUMPER SERIE 35 - 2.8 Hdi	01 / 04	**PD/652-B**	Bosch	**PD/501**	Bosch	Freio de mão **FI/196-CP**
JUMPER SERIE 35 - 2.8 Hdi	05 /	**PD/652-B**	Bosch	**PD/501**	Bosch	Freio de mão **FI/322-CP**
JUMPY 1.6	99 /	**PD/448-A**	Bendix			
JUMPY 1.9 D / TD	99 /	**PD/448-A**	Bendix			
JUMPY 2.4 E / D	99 /	**PD/448-A**	Bendix			
MEHARI	69 / 73	**9224-S/F**		**9240-S/F**		
RELAY 2.2 HDI 100 (BOX, BUS, CHASSIS)	04-06 /	**PD/1397-B**				
RELAY 2.2 HDI 120 (BOX, BUS, CHASSIS)	04-06 /	**PD/1397-B**				
RELAY 3.0 HDI 160 (BOX, BUS, CHASSIS	04-06 /	**PD/1397-B**				
SAXO 1.0 / 1.1 / 1.4	00 /	**PD/322-A**	Bendix			
SAXO 1.0 / 1.1 / 1.4	00 /	**PD/364-A**	Teves			
SAXO 1.5 D	00 /	**PD/322-A**	Bendix			
SAXO 1.6 VTL / VTR / VTS 16V	00 /	**PD/322-A**	Bendix	**PD/465**	Bendix	
SAXO 1.6 VTL / VTR / VTS 16V	00 /	**PD/364-A**	Teves	**PD/465**	Bendix	
XANTIA 1.6i	/ 98	**PD/322-A**	Bendix			
XANTIA 1.6i	/ 98	**PD/364-A**	Teves			
XANTIA 1.8i	/ 98	**PD/322-A**	Bendix			
XANTIA 1.8i	/ 98	**PD/364-A**	Teves			
XANTIA 1.9 TD SX	/ 98	**PD/322-A**	Bendix			
XANTIA 1.9 TD SX	/ 98	**PD/364-A**	Teves			
XANTIA 2.0	98 /			**PD/490**	Citroen	
XANTIA 2.0 i SX TD	/ 98	**PD/322-A**	Bendix			
XANTIA 2.0 i SX TD	/ 98	**PD/364-A**	Teves			
XANTIA 2.0 SX	/ 98	**PD/322-A**	Bendix			
XANTIA 2.0 SX	/ 98	**PD/364-A**	Teves			
XANTIA 2.0 Turbo	93 /			**PD/490**	Citroen	
XANTIA 2.0i 16V SX	93 / 98	**PD/322-A**	Bendix	**PD/490**	Citroen	
XANTIA 2.0i 16V SX	93 / 98	**PD/364-A**	Teves	**PD/490**	Citroen	
XANTIA 2.0i Exclusive	93 /			**PD/490**	Citroen	
XANTIA 2.0i VSX	93 /			**PD/490**	Citroen	
XANTIA 2.9i 24V	97 /			**PD/490**	Citroen	
XANTIA 3.0 V6 24V	96 /			**PD/490**	Citroen	
XANTIA ACTIVA 2.0	93 / 98			**PD/490**	Citroen	
XANTIA ACTIVA 2.0 Turbo	95 / 98			**PD/490**	Citroen	

MODEL / *MODELO*	YEAR - *AÑO*	FRONT *DELANTERA*	SYSTEM *SISTEMA*	REAR *TRASERA*	SYSTEM *SISTEMA*	OBS.
CITROEN						
XANTIA ACTIVA 3.0 V6 24V	96 /			**PD/490**	Citroen	
XANTIA BREAK 1.9 TD	93 / 98			**PD/490**	Citroen	
XANTIA BREAK 2.0i 16V	93 / 98			**PD/490**	Citroen	
XANTIA BREAK GLX 2.0 16V	93 /			**PD/490**	Citroen	
XANTIA EXCLUSIVE 2.0 16V	93 /			**PD/490**	Citroen	
XANTIA SX 1.8 16V	95 / 98			**PD/490**	Citroen	
XANTIA VSX 2.0	93 /			**PD/490**	Citroen	
XANTIA VSX 2.0 16V	93 /			**PD/490**	Citroen	
XM 2.0i Clasicc / Tecnic	89 / 96			**PD/490**	Citroen	
XM 2.9	96 /			**PD/490**	Citroen	
XM 3.0 V6 24V Tecnic / Pallas	89 / 95			**PD/490**	Citroen	
XM 3.0i V6 24V Tecnic / Pallas / SXi	96 /			**PD/490**	Citroen	
XM EXCLUSIVE	91 /			**PD/490**	Citroen	
XM SENSATION	91 /			**PD/490**	Citroen	
XSARA 1.4 / 1.6 / 1.8 / 1.9	98 /	**PD/364-A**	Teves			
XSARA 1.4 / 1.6 / 1.8 / 1.9	98 /	**PD/412**	Bendix			
XSARA 1.6	97 /	**PD/364-A** **PD/411-E**	Teves Girling			
XSARA 1.6 16V	09-00 /	**PD/505**	Bosch			
XSARA 1.8	97 / 00			**PG/204-CPA**	Girling	Freio traseiro Ø180x32mm
XSARA 1.8 SX / 1.8i 16V SX	99 /	**PD/411** **PD/411-E**	Girling	**PD/465**	Bendix	
XSARA 1.9 D SX / TD SX	99 /	**PD/411** **PD/411-E**	Girling	**PD/465**	Bendix	
XSARA 2.0	00 /	**PD/405-E**	Girling			
XSARA 2.0 / 2.0 i 16V SX	00 /	**PD/405-E**	Bendix	**PD/465**	Bendix	
XSARA BREAK 1.6 16V	97 /	**PD/411-E**	Bendix			
XSARA BREAK 1.6 16V	09-00 /	**PD/505**	Bosch			
XSARA BREAK 1.8 16V	97 /	**PD/411-E**	Bendix	**PD/465**	Bendix	
XSARA BREAK 2.0 HDI	09-00 /	**PD/505**	Bosch			
XSARA COUPÉ 1.6 16V	09-00 /	**PD/505**	Bosch			
XSARA EXCLUSIVE 1.8 16V	97 /	**PD/411-E**	Bendix	**PD/465**	Bendix	
XSARA EXCLUSIVE 2.0 16V	97 /	**PD/411-E**	Girling	**PD/465**	Bendix	
XSARA GLX 1.6 16V	97 /	**PD/364-A** **PD/411-E**	Teves Girling			
XSARA GLX 1.8 16V	97 /	**PD/364-A** **PD/411-E**	Teves Girling	**PD/465**	Bendix	
XSARA GLX 2.0 16V	97 /	**PD/364-A** **PD/411-E**	Teves Girling	**PD/465**	Bendix	
XSARA PICASSO 1.8 16V	01 /	**PD/411**	Girling	**PD/465**	Bendix	
XSARA PICASSO 2.0i HD	01 /	**PD/411**	Girling	**PD/465**	Bendix	
XSARA PICASSO EXCLUSIVE 2.0 16V	01 /	**PD/411**	Girling	**PE/172-CPA**	Girling	
XSARA PICASSO GLX 2.0 16V	01 /	**PD/411**	Girling	**PE/172-CPA**	Girling	
XSARA SX 2.0i 16V	00 /	**PD/405-E**	Girling			
XSARA VTS 1.8 16V	98 /	**PD/411-E**	Girling	**PD/465**	Bendix	
XSARA VTS 2.0 16V	98 /			**PD/465**	Bendix	
ZX 1.4	91 / 98			**PG/208-CPA**	Girling	Freio traseiro Ø180x32mm
ZX 1.6	91 / 97	**PD/521-E**	Girling	**PD/465**	Bendix	
ZX 1.6 Aura / 1.8 i / 1.9 TD	/ 98	**PD/305-A**	Girling	**PD/465**	Bendix	
ZX 1.8	91 / 97	**PD/521-E**	Girling	**PD/465**	Bendix	
ZX 1.9	91 / 98			**PG/204-CPA**	Girling	Freio traseiro Ø180x32mm
ZX 2.0 i 16V	/ 98	**PD/305-A**	Girling	**PD/465**	Bendix	
ZX 2.0i	91 / 97	**PD/521-E**	Girling	**PD/465**	Bendix	
ZX 2.0i 16V	91 / 97	**PD/326-A**	Girling	**PD/465**	Bendix	
ZX BREAK 1.6	93 / 97	**PD/521-E**	Girling	**PD/465**	Bendix	
ZX BREAK 1.8	93 / 97	**PD/521-E**	Girling	**PD/465**	Bendix	

MODEL / *MODELO*	YEAR - *AÑO*	FRONT *DELANTERA*	SYSTEM *SISTEMA*	REAR *TRASERA*	SYSTEM *SISTEMA*	OBS.
CITROEN						
ZX Coupé 1.9	/ 98	**PD/326-A**	Girling	**PD/465**	Bendix	
ZX FURIO	91 / 98			**PG/204-CPA**	Girling	Freio traseiro Ø180x32mm
ZX GTi	93 /	**PD/363-A**	Girling			
ZX VOLCANE	91 / 98	**PD/521-E**	Girling	**PD/465**	Bendix	
ZX VOLCANE 1.9	/ 98	**PD/326-A**	Girling	**PD/465**	Bendix	
CLARK						
125-A				**PD/29**		947932
125-C				**PD/29**		947932
45-C				**PD/29**		947932
55-C				**PD/29**		947932
85-3A				**PD/29**		947932
EMPILHADEIRA C-300	/ 87			**PD/8**	Varga	
EMPILHADEIRA C-300	87 /			**PD/13**	Teves	
EMPILHADEIRA Y-40	/ 87			**PD/8**	Varga	
EMPILHADEIRA Y-40	87 /			**PD/13**	Teves	
EMPILHADEIRA Y-50	/ 87			**PD/8**	Varga	
EMPILHADEIRA Y-50	87 /			**PD/13**	Teves	
EMPILHADEIRA Y-60	/ 87			**PD/8**	Varga	
EMPILHADEIRA Y-60	87 /			**PD/13**	Teves	
MICHIGAN 75				**TR/348**		118 255
MICHIGAN 75				**TR/368**		118 268
MICHIGAN 80				**TR/348**		118 255
MICHIGAN 80				**TR/368**		118 268
CNHTC						
SHANQI/SHACMAN		**SY/23/31/1**		**SY/24/1**		
STEYR						
14S / 15S / 16S / 17S 4x2	90 /			**19071 00**		air applied brake
19S / 22S / 26S / 32S / 42S	86 / 93	**19245 00**		**19246 00**		
19S / 22S / 26S / 32S / 42S	86 / 93	**19245 00**		**19036/037 00**		articulated vehicles
19S / 22S / 26S / 32S / 42S	94 /	**19495 00**		**19246 00**		without all-wheel drive
19S / 22S / 26S / 32S / 42S	94 /	**19495 00**		**19496 00**		Articulated towing vehicles with Eaton - MAN rear axle
991 / 1291 / 1491 / 1891	78 / 85	**19245 00**		**19246 00**		
STEYR		**SY/23/31/1**		**SY/24/1**		
SINOTRUK						
A7	11 /	**PD/204**	CNHTC			
HOWO		**SY/23/31/1**		**SY/24/1**		
HOWO 380 6X2	09	**ST/350**		**ST/351**		
HOWO 380 6X2	09 /	**PD/204**	CNHTC	**ST/351**		
HOWO 380 6X4	09	**ST/350**		**ST/352**		
HOWO 380 6X4	09 /	**PD/204**	CNHTC	**ST/352**		
CODER						
419 x 219,1 mm				**19369/370 00**		ROR Axle
420 x 180,0 mm				**19032 00**		BPW Axle
COLAERT						
414 x 150,0 mm				**19049/199 95**		
CONTIN						
3° EIXO	Todos			**4524-B**	Master	4524-B
CARRETA	/ 78			**4515-C** **4515-G**		

MODEL / *MODELO*	YEAR - *AÑO*	FRONT *DELANTERA*	SYSTEM *SISTEMA*	REAR *TRASERA*	SYSTEM *SISTEMA*	OBS.
CONTIN						
CARRETA	78 /			**CA/32**	Master	
CUMMINS						
RC-210	73 / 76	**4524-B**	Master	**4515-C**		
RCA-210	73 / 76	**4524-B**	Master	**4515-C**		
RL-413	70 / 72	**4524-B**	Master	**4515-C**		
RSL-413	70 / 72	**4524-B**	Master	**4515-C**		
U-413	70 / 72	**4524-B**	Master	**4515-C**		
UC-210	73 / 76	**4524-B**	Master	**4515-C**		
UCE-210	73 / 76	**4524-B**	Master	**4515-C**		
UCL-210	73 / 76	**4524-B**	Master	**4515-C**		
URL-413	70 / 72	**4524-B**	Master	**4515-C**		
DACIA						
DACIA	93 /	**PD/301**	Bendix	**RN/211**		
DAEWOO						
BUS		**F/819**		**F/818**		
BUS		**F/1120**				ÓMNIBUS
CIELO 1.5	93 /	**PD/424**	GM			
CIELO 1.5 GL	96 /	**PD/475**	Akebono			
CIELO 1.5 GLE	96 /	**PD/475**	Akebono			
CIELO 1.5 GLX	96 /	**PD/475**	Akebono			
CIELO 1.5 GTX	96 /	**PD/475**	Akebono			
ESPERO 1.5	90 / 94	**PD/424**	GM			
ESPERO 1.5	90 / 94	**PD/431**	GM			
ESPERO 1.5i 16V	94 / 96	**PD/37**	Teves			
ESPERO 1.5i 16V	97 /	**PD/475**	Akebono			
ESPERO 1.8 CD	96 /	**PD/475**	Akebono	**CB/58-CPA**		Freio traseiro Ø200x46mm
ESPERO 1.8i	94 / 96	**PD/37**	Teves	**CB/58-CPA**		Freio traseiro Ø200x46mm
ESPERO 2.0	90 / 94	**PD/424**	GM	**CB/58-CPA**		Freio traseiro Ø200x46mm
ESPERO 2.0	90 / 94	**PD/431**	GM	**CB/58-CPA**		Freio traseiro Ø200x46mm
ESPERO 2.0 CD	96 /	**PD/475**	Akebono	**CB/58-CPA**		Freio traseiro Ø200x46mm
ESPERO 2.0i	94 / 96	**PD/37**	Teves	**CB/58-CPA**		Freio traseiro Ø200x46mm
HEAVEN	94 / 97	**PD/431**	GM			
KALOS 1.2	04-03 /	**PD/818**	Akebono			
KALOS 1.4	07-02 /	**PD/818**	Akebono			
LANOS 1.3	/ 97	**PD/37**	Teves	**CB/58-CPA**		Freio traseiro Ø200x46mm
LANOS 1.3	/ 97	**PD/42**	Teves	**CB/58-CPA**		Freio traseiro Ø200x46mm
LANOS 1.4 SE	/ 97	**PD/37**	Teves	**CB/58-CPA**		Freio traseiro Ø200x46mm
LANOS 1.4 SE	/ 97	**PD/42**	Teves	**CB/58-CPA**		Freio traseiro Ø200x46mm
LANOS 1.4 SE	97 /	**PD/475**	Akebono	**CB/58-CPA**		Freio traseiro Ø200x46mm
LANOS 1.5 SE	/ 97	**PD/37**	Teves	**CB/58-CPA**		Freio traseiro Ø200x46mm
LANOS 1.5 SE	/ 97	**PD/42**	Teves	**CB/58-CPA**		Freio traseiro Ø200x46mm
LANOS 1.5 SE	97 /	**PD/475**	Akebono	**CB/58-CPA**		Freio traseiro Ø200x46mm
LANOS 1.5 SX	97 /	**PD/475**	Akebono	**CB/58-CPA**		Freio traseiro Ø200x46mm
LANOS 1.6 16V	/ 97	**PD/37**	Teves	**CB/58-CPA**		Freio traseiro Ø200x46mm
LANOS 1.6 16V	/ 97	**PD/42**	Teves	**CB/58-CPA**		Freio traseiro Ø200x46mm
LANOS 1.6 SX 16V	97 /	**PD/475**	Akebono	**CB/58-CPA**		Freio traseiro Ø200x46mm
LEGANZA 1.8	98 /	**PD/475**	Akebono			
LEGANZA 2.0	98 /	**PD/475**	Akebono			
LEGANZA 2.2 CDX	98 /	**PD/475**	Akebono			
LEGANZA 2.2 SX	98 /	**PD/475**	Akebono			
LEGANZA KLAV 2.2i 16V CDX	06-97 / 12-02	**PD/817**	Akebono			

MODEL / *MODELO*	YEAR - *AÑO*	FRONT *DELANTERA*	SYSTEM *SISTEMA*	REAR *TRASERA*	SYSTEM *SISTEMA*	OBS.
DAEWOO						
MATIZ 0.8	09-98 /	**PD/598**	Akebono			
MATIZ 1.0	01-03 /	**PD/598**	Akebono			
NEXIA 1.5 GL	97 /	**PD/475**	Akebono			
NEXIA 1.5 GL	95 / 97	**PD/37**	Teves			
NEXIA 1.5 GL	95 / 97	**PD/42**	Teves			
NEXIA 1.5 GL	95 / 97	**PD/424**	GM			
NEXIA 1.5i 16V GLX	95 / 97	**PD/37**	Teves			
NEXIA 1.5i 16V GLX	95 / 97	**PD/42**	Teves			
NEXIA 1.5i 16V GLX	95 / 97	**PD/424**	GM			
NEXIA 1.5i 16V GTX	95 / 97	**PD/37**	Teves			
NEXIA 1.5i 16V GTX	95 / 97	**PD/42**	Teves			
NEXIA 1.5i 16V GTX	95 / 97	**PD/424**	GM			
NEXT GENERATION		**F/833**		**F/834**		
NUBIRA 1.6 SE	97 /	**PD/475**	Akebono			
NUBIRA 1.6 SX	97 /	**PD/475**	Akebono			
NUBIRA 2.0 CDX	97 /	**PD/475**	Akebono			
NUBIRA WAGON 1.6	07-03 /			**PD/681**	Sumitomo	
NUBIRA WAGON 1.6 16V	05-97 /			**PD/681**	Sumitomo	
NUBIRA WAGON 1.8	07-03 /			**PD/681**	Sumitomo	
PRINCE 2.0	92 /	**PD/431**	GM			
RACER GTi	90 / 94	**PD/424**	GM			
RACER GTi	90 / 94	**PD/431**	GM			
TICO	90 /	**PD/421**	Sumitomo			
DAF						
CF 65 / 75 / 85 - SERIES	01 /	**PD/116**	Knorr	**PD/116**	Knorr	
FA 1000CB / FA 1000CN	12-86 / 12-92	**PD/148**	Wabco			
FA 45.120 SERIES	05-91 / 12-00	**PD/148**	Wabco			
FA 45.130 SERIES	05-91 / 12-00	**PD/148**	Wabco			
FA 45.150 SERIES	05-91 / 12-00	**PD/148**	Wabco			
FA 45.160 SERIES	05-91 / 12-00	**PD/148**	Wabco			
FA 50 - WHEEL 19.5"	/ 05-95	**PD/168-A**	Wabco			
FA 55.150 SERIES	11-95 / 12-00	**PD/168-A**	Wabco			
FA 55.180 SERIES	11-95 / 12-00	**PD/168-A**	Wabco			
FA 55.210 SERIES	11-95 / 12-00	**PD/168-A**	Wabco			
FA 55.230 SERIES	11-95 / 12-00	**PD/168-A**	Wabco			
FA 600CD	12-86 / 12-92	**PD/148**	Wabco			
FA 800CB / FA 800CN	12-86 / 08-91	**PD/148**	Wabco			
LF 45 - SERIES	01 /	**PD/124**	Wabco	**PD/124**	Wabco	
LF 55 - SERIES	01 /	**PD/116**	Knorr	**PD/116**	Knorr	
LF 55.170/180	01-01 / 02-03	**PD/194**	Wabco			
LF 55.220/250	01-01 / 02-03	**PD/194**	Wabco			
ROADRUNNER 10.12 / 13 / 15	01-86 / 12-91	**PD/148-A**	Wabco			
ROADRUNNER 6.10 / 12 / 13 / 15	01-86 / 12-91	**PD/148**	Wabco			
ROADRUNNER 6.10 / 12 / 13 / 15	01-86 / 12-91	**PD/148-A**	Wabco			
ROADRUNNER 8.10 / 12 / 13 / 15	01-86 / 12-91	**PD/148**	Wabco			
ROADRUNNER 8.10 / 12 / 13 / 15	01-86 / 12-91	**PD/148-A**	Wabco			
SB 200	02 /	**PD/120**	Knorr	**PD/120**	Knorr	
SB 2300 / 2300 DHTD	87 /	**PD/175**	Knorr			
SB 2300 / 2300 DHTD	87 /	**PD/176**	Knorr			
SB 2305 DHS / 2305 DHTD	87 /	**PD/175**	Knorr			
SB 2305 DHS / 2305 DHTD	87 /	**PD/176**	Knorr			
SB 2705	87 /	**PD/175**	Knorr			
SB 2705	87 /	**PD/176**	Knorr			

MODEL / *MODELO*	YEAR - *AÑO*	FRONT *DELANTERA*	SYSTEM *SISTEMA*	REAR *TRASERA*	SYSTEM *SISTEMA*	OBS.
DAF						
SB 3000 DKV	87 /	**PD/175**	Knorr			
SB 3000 DKV	87 /	**PD/176**	Knorr			
SB 3000 / DKSB DSKB	84 / 94	**PD/175**	Knorr			
SB 3000 / DKSB DSKB	84 / 94	**PD/176**	Knorr			
SBR 3000	86 /	**PD/175**	Knorr			
SBR 3000	86 /	**PD/176**	Knorr			
SBR 3000 DKSB / DKZ	87 / 89	**PD/175**	Knorr			
SBR 3000 DKSB / DKZ	87 / 89	**PD/176**	Knorr			
SWIFT	01-87 /	**PD/148**	Wabco			
XF 75 / 85 / 95 - SERIES	01 /	**PD/116**	Knorr	**PD/116**	Knorr	
XF 105 4X2	13 /	**DF/235**		**CA/33**		
XF 105 6X2	13 /	**DF/235**		**CA/33**		
XF 105 6X4	13 /	**DF/235**		**CA/33**		
DAF BUSES						
MB 200	11-89 /			**19256/260 00**		
MB 200 DKFL / DKVL / MBG 200 DKTL	74 / 85	**19150/151 00**		**19256/260 00**		19150/151 00 rear trailer axle
MB 201	74 / 80	**19150/151 00**				
MB 201 DKCL	87 / 89	**19150/151 00**				
MBG 200	84 / 89	**19150/151 00**				
MBG 200 DKFL	83 /	**19150/151 00**		**19256/260 00**		19150/151 00 2nd rear axle
SB 200	80 / 89	**19150/151 00**		**19256/260 00**		
SB 2005 DHU	82 / 86			**19256/260 00**		
SB 201 / SB 210	74 / 80	**19150/151 00**				
SB 220	75 / 80	**19150/151 00**				
SB 220 LD / LC	87 / 89	**19150/151 00**				
SB 220 LD / LC	87 / 89	**19900/901 00**		**19890/891 00**		
SB 220 / SBG 220	11-89 /	**19010/011 00**		**19063/064 00**		
SB 2300 DHD / DHS	82 / 86	**19150/151 00**		**19256/260 00**		19150/151 00 2nd rear axle
SB 2300 DHTD	87 /			**19094 00**		
SB 2305 DHS / DHTD	87 /	**19150/151 00**		**19094 00**		
SB 2705	87 /	**19150/151 00**		**19094 00**		
SB 3000	84 / 87	**19150/151 00**		**19256/260 00**		
SB 3000	87 / 89			**19890/891 00**		
SB 3000 DKSB	11-89 /			**19069/077 00**		
SB 3000 DKSB / DSKB	84 / 10-89	**19150/151 00**		**19094 00**		
SB 3000 DKV	87 /	**19150/151 00**		**19094 00**		
SBR 3000	11-89 /			**19069/077 00**		
SBR 3000	86 / 10-89	**19150/151 00**		**19914/915 00**		
SBR 3000 DKSB / DKZ	87 / 89			**19150/151 00**		
SBR 3000 DKSB / DKZ	87 / 89			**19094 00**		
TB 2100	84 / 10-89	**19150/151 00**		**19256/260 00**		
TB 2100	11-89 /			**19063/064 00**		
DAF TRAILERS						
ELT 3218 & ELT 3219				**19150/151 00**		
ELT-3224 EUROTRAILER 21 Ton				**19150/151 00**		
LT 3200-1800				**19150/151 00**		Flat Bed Trailer
LVW 1616 / 16 Ton Gross / 4 wheel Trailers				**19094 00**		BPW Axles
TANDEM AXLES				**19150/151 00**		
DAF TRUCKS						
2100				**19150/151 00**		
3200	/ 89	**19150/151 00**		**19150/151 00**		air brake
420 x 150,0 mm		**19900/901 00**				2nd front axles too
420 x 150,0 mm				**19010/011 00**		
420 x 175,0 mm		**19888/889 00**				

MODEL / *MODELO*	YEAR - *AÑO*	FRONT *DELANTERA*	SYSTEM *SISTEMA*	REAR *TRASERA*	SYSTEM *SISTEMA*	OBS.
DAF TRUCKS						
420 x 175,0 mm				**19052/055 00**		
420 x 200,0 mm				**19890/891 00**		2nd rear axles too
420 x 200,0 mm				**19063/064 00**		
420 x 240,0 mm				**19914/915 00**		2nd rear axles too
420 x 240,0 mm				**19069/077 00**		
ALL TYPES (306-507 PS)	09-87 / 89					
ALL TYPES (with S-CAM BRAKES)	90 /					
E 2000 / 2005 FA / FT	72 / 89			**19150/151 00**		
F 2000 / 2005 FAS / FAT / FM	72 / 89			**19150/151 00**		
F 2200 / 2205 FA / FT	72 / 89			**19150/151 00**		
F 2200 / 2205 FAS / FAT / FM	72 / 89			**19150/151 00**		
F 2500 DHS	86 / 89	**19150/151 00**		**19256/260 00**		19256/260 00 2nd rear axle
F 2500 DHS Turbo Intercooler	81 / 89	**19150/151 00**		**19256/260 00**		19256/260 00 2nd rear axle
F 2800 ATI	86 / 89	**19150/151 00**		**19890/891 00**		19150/151 00 2nd front axle 19256/260 00 2nd rear axle 19150/151 00 trailer axle
F 3200 ATI	86 / 89	**19150/151 00**		**19890/891 00**		19150/151 00 2nd front axle 19256/260 00 2nd rear axle 19150/151 00 trailer axle
F 3300 DKX Turbo Intercooler	81 / 89	**19150/151 00**		**19256/260 00**		19150/151 00 2nd rear axle
FA 1900	11-89 / 09-93	**19010/011 00**		**19052/055 00**		19256/260 00 rear optional
FA 1900 DNS / Topsleeper	87 / 89	**19900/901 00**		**19888/889 00**		19256/260 00 rear optional
FA 1900 DNT	87 / 89	**19900/901 00**		**19888/889 00**		19256/260 00 rear optional
FA 1905	11-89 / 09-93	**19010/011 00**		**19052/055 00**		19256/260 00 rear optional
FA 1905 / FT 1905	87 / 89	**19900/901 00**		**19888/889 00**		19256/260 00 rear optional
FA 2100	77 / 89	**19150/151 00**		**19150/151 00**		
FA 2100 DH / DHTD / DHT	83 / 89	**19150/151 00**		**19256/260 00**		
FA 2100 / FAR 2100	87 / 89	**19900/901 00**		**19888/889 00**		19256/260 00 rear optional
FA 2105	11-89 /			**19052/055 00**		
FA 2105 DH / DHTD	84 / 89	**19150/151 00**		**19256/260 00**		
FA 2105 DHR	78 / 89	**19150/151 00**		**19150/151 00**		
FA 2105 DM	80 / 89	**19150/151 00**		**19150/151 00**		
FA 2300	11-89 /			**19063/064 00**		
FA 2300 DHT	83 / 89	**19150/151 00**		**19256/260 00**		19150/151 00 2nd rear axle
FA 2500	11-89 /			**19052/055 00**		19256/260 00 rear optional
FA 2500 / FAR 2500	87 /	**19900/901 00**		**19888/889 00**		19256/260 00 rear optional
FA 2505	11-89 /			**19052/055 00**		
FA 2505	11-89 /			**19052/055 00**		19256/260 00 rear optional
FA 2505 DHS	84 / 89	**19150/151 00**		**19256/260 00**		
FA 2505 DHS	84 / 89	**19150/151 00**		**19256/260 00**		19256/260 00 2nd rear axle
FA 2605 DK 4x2	72 / 89			**19256/260 00**		
FA 2605 DKA 4x2	72 / 89			**19256/260 00**		
FA 2800 DKS 4x2	74 / 89	**19150/151 00**		**19256/260 00**		
FA 2800 DKV / Topsleeper	86 / 89	**19150/151 00**				
FA 2805 DKSE	84 / 89	**19150/151 00**		**19256/260 00**		19256/260 00 2nd rear axle
FA 3305 DKX	84 / 89	**19150/151 00**		**19256/260 00**		19150/151 00 2nd rear axle
FA 45.120-035	05-91 / 01			**15817/823 00**		
FA 45.120-06	05-91 / 01			**15817/823 00**		
FA 45.130 B06 / C06	05-91 / 01			**15817/823 00**		
FA 45.130 B08 / C08	05-91 / 01			**15817/823 00**		
FA 45.150 B08 / C08	05-91 / 01			**15817/823 00**		
FA 45.160 C08	05-91 / 01			**15817/823 00**		
FA 45.180 B08	05-91 / 01			**15817/823 00**		
FA 45.210 B08	96 / 01			**15817/823 00**		
FA 600	87 / 91			**15817/823 00**		
FA 65 CF 180	02-98 / 99	**19010/011 00**		**19063/064 00**		

MODEL / *MODELO*	YEAR - *AÑO*	FRONT *DELANTERA*	SYSTEM *SISTEMA*	REAR *TRASERA*	SYSTEM *SISTEMA*	OBS.
DAF TRUCKS						
FA 65 CF 210	02-98 / 99	**19010/011 00**		**19063/064 00**		
FA 65 CF 240	02-98 / 99	**19010/011 00**		**19063/064 00**		
FA 65.180 4x2	03-93 / 02-98	**19010/011 00**		**19063/064 00**		
FA 65.210	03-93 / 02-98	**19010/011 00**		**19063/064 00**		
FA 65.240	05-96 / 02-98	**19010/011 00**		**19063/064 00**		
FA 75 CF 250	02-98 / 08-00	**19010/011 00**		**19063/064 00**		
FA 75 CF 290	02-98 / 08-00	**19010/011 00**		**19063/064 00**		
FA 75 CF 320	02-98 / 08-00	**19010/011 00**		**19063/064 00**		
FA 75.240 ATI 4x2	07-92 / 02-98	**19010/011 00**		**19063/064 00**		
FA 75.270 ATI 4x2	07-92 / 02-98	**19010/011 00**		**19063/064 00**		
FA 75.300 4x2	07-92 / 02-98	**19010/011 00**		**19063/064 00**		
FA 800	12-86 / 08-91			**15817/823 00**		
FA 85 CF 340 4x2	02-98 / 08-00	**19010/011 00**		**19063/064 00**		
FA 85 CF 380 4x2	02-98 / 08-00	**19010/011 00**		**19063/064 00**		
FA 85 CF 430 4x2	02-98 / 08-00	**19010/011 00**		**19063/064 00**		
FA 85.330 ATI 4x2	07-92 / 02-98	**19010/011 00**		**19063/064 00**		
FA 85.360 ATI 4x2	07-92 / 02-98	**19010/011 00**		**19063/064 00**		
FA 85.400 ATI 4x2	03-95 / 02-98	**19010/011 00**		**19063/064 00**		
FA / FT 2700	11-89 /			**19063/064 00**		
FA / FT 2900	11-89 /			**19063/064 00**		
FAD 2205	74 / 89	**19150/151 00**		**19150/151 00**		
FAD 2305 DHU	80 / 86	**19150/151 00**		**19150/151 00**		
FAD 2500 / FAS 2500	87 /	**19900/901 00**		**19888/889 00**		19256/260 00 rear optional
FAD 2525 DHS 8x4	83 / 89	**19150/151 00**		**19256/260 00**		19256/260 00 2nd rear axle
FAD 2825 DKV	/ 87	**19150/151 00**		**19256/260 00**		
FAD 3325 DKX 8x4	86 / 89	**19150/151 00**		**19256/260 00**		19150/151 00 2nd front axle
FAD 3325 DKX-ATI 8x4	86 / 89	**19150/151 00**		**19256/260 00**		19150/151 00 2nd front axle
FAD 85.330 ATI 8x4	07-92 / 02-98	**19052/055 00**		**19063/064 00**		19010/011 00 2nd front axle 19052/055 00 2nd rear axle
FAD 85.360 ATI 8x4	07-92 / 02-98	**19052/055 00**		**19063/064 00**		19010/011 00 2nd front axle 19052/055 00 2nd rear axle
FAD 85.400 ATI 8x4	03-95 / 02-98	**19052/055 00**		**19063/064 00**		19010/011 00 2nd front axle 19052/055 00 2nd rear axle
FAG 2305 DHT 6x2	82 / 89	**19150/151 00**		**19256/260 00**		19150/151 00 2nd rear axle
FAG 2505 DHS	83 / 89	**19150/151 00**		**19150/151 00**		19256/260 00 2nd rear axle
FAG 3300 6x2	86 / 89	**19150/151 00**				19150/151 00 2nd front axle
FAG 75.240 ATI 6x2 / 6x4	07-92 / 02-98	**19010/011 00**		**19063/064 00**		19052/055 00 2nd rear axle
FAG 75.270 / FAN 75.270 6x2 / 6x4	07-92 / 02-98	**19010/011 00**		**19063/064 00**		19052/055 00 2nd rear axle
FAG 75.300 / FAN 75.300 6x2 / 6x4	07-92 / 02-98	**19010/011 00**		**19063/064 00**		19052/055 00 2nd rear axle
FAG 85.330 6x2 / 6x4	07-92 / 02-98	**19052/055 00**		**19010/011 00**		19063/064 00 2nd rear axle
FAG 85.360 6x2 / 6x4	07-92 / 02-98	**19052/055 00**		**19010/011 00**		19063/064 00 2nd rear axle
FAG 85.400 6x2 / 6x4	03-95 / 02-98	**19052/055 00**		**19010/011 00**		19063/064 00 2nd rear axle
FAG / FAN 75 CF 2500 6x2 / 6x4	02-98 / 08-00	**19010/011 00**		**19063/064 00**		19052/055 00 2nd rear axle
FAG / FAN 75 CF 290 6x2 / 6x4	02-98 / 08-00	**19010/011 00**		**19063/064 00**		19052/055 00 2nd rear axle
FAG / FAN 75 CF 320 6x2 / 6x4	02-98 / 08-00	**19010/011 00**		**19063/064 00**		19052/055 00 2nd rear axle
FAN 75.240 6x2 / 6x4	07-92 / 02-98	**19010/011 00**		**19063/064 00**		19052/055 00 2nd rear axle
FAR 2500 DHS 6x2	82 / 89	**19150/151 00**		**19256/260 00**		19256/260 00 2nd rear axle
FAR 3300 6x2	86 / 89	**19150/151 00**				19150/151 00 2nd front axle
FAR 75.240 6x2	07-92 / 02-98	**19010/011 00**		**19063/064 00**		19052/055 00 2nd rear axle
FAR 75.270 / FAS 75.270 6x2	07-92 / 02-98	**19010/011 00**		**19063/064 00**		19052/055 00 2nd rear axle
FAR 75.300 6x2	07-92 / 02-98	**19010/011 00**		**19063/064 00**		19052/055 00 2nd rear axle
FAR 85.330 6x2 / 6x4	07-92 / 02-98	**19052/055 00**		**19010/011 00**		19063/064 00 2nd rear axle
FAR 85.360 6x2 / 6x4	07-92 / 02-98	**19052/055 00**		**19010/011 00**		19063/064 00 2nd rear axle
FAR 85.400 6x2 / 6x4	03-95 / 02-98	**19052/055 00**		**19010/011 00**		19063/064 00 2nd rear axle
FAR / FAS 75 CF 250 6x2	02-98 / 08-00	**19010/011 00**		**19063/064 00**		19052/055 00 2nd rear axle

MODEL / *MODELO*	YEAR - *AÑO*	FRONT *DELANTERA*	SYSTEM *SISTEMA*	REAR *TRASERA*	SYSTEM *SISTEMA*	OBS.
DAF TRUCKS						
FAR / FAS 75 CF 290 6x2	02-98 / 08-00	**19010/011 00**		**19063/064 00**		19052/055 00 2nd rear axle
FAR / FAS 75 CF 320 6x2	02-98 / 08-00	**19010/011 00**		**19063/064 00**		19052/055 00 2nd rear axle
FAR / FTR 3300 DKX 6x2	82 / 89	**19150/151 00**		**19256/260 00**		19150/151 00 2nd rear axle
FAR / FTR 3300 DKX 6x2	84 / 89	**19150/151 00**		**19256/260 00**		19150/151 00 2nd rear axle
FAS 2100 / FAT 2100	87 / 89	**19900/901 00**		**19888/889 00**		19256/260 00 rear optional
FAS 2105 DHR	80 / 89	**19150/151 00**		**19150/151 00**		
FAS 2600 DK 6x2	72 / 89			**19256/260 00**		
FAS 2600 DKH 6x2	72 / 89			**19256/260 00**		
FAS 75.240 6x2	07-92 / 02-98	**19010/011 00**		**19063/064 00**		19052/055 00 2nd rear axle
FAS 75.300 6x2	07-92 / 02-98	**19010/011 00**		**19063/064 00**		19052/055 00 2nd rear axle
FAS 85.330 6x2 / 6x4	07-92 / 02-98	**19052/055 00**		**19010/011 00**		19063/064 00 2nd rear axle
FAS 85.360 6x2 / 6x4	07-92 / 02-98	**19052/055 00**		**19010/011 00**		19063/064 00 2nd rear axle
FAS 85.400 6x2 / 6x4	03-95 / 02-98	**19052/055 00**		**19010/011 00**		19063/064 00 2nd rear axle
FAT 2305 DHRE	80 / 86	**19150/151 00**		**19150/151 00**		
FAT 2305 DHU / FT 2500	77 / 89	**19150/151 00**		**19256/260 00**		19256/260 00 2nd rear axle
FAT 2525 DHS 6x4	83 / 89	**19150/151 00**		**19256/260 00**		19256/260 00 2nd rear axle
FAT 2525 DKS 6x4	82 / 89	**19150/151 00**		**19256/260 00**		19150/151 00 2nd rear axle
FAT 2525 DKS 6x4	82 / 89	**19150/151 00**		**19256/260 00**		19256/260 00 2nd rear axle
FAT 2600 DKA 6x4	72 / 89			**19256/260 00**		
FAT 2825 DKV 6x4	86 / 89	**19150/151 00**		**19256/260 00**		19256/260 00 2nd front axle
FAT 2825 DKV 8x4	86 / 89	**19150/151 00**		**19256/260 00**		19150/151 00 2nd front axle 19256/260 00 2nd front axle
FAT 3325 DKX 6x4	82 / 89	**19150/151 00**		**19256/260 00**		19256/260 00 2nd rear axle
FAT 75 CF 250	02-98 / 08-00	**19010/011 00**		**19063/064 00**		
FAT 75 CF 290 6x4	02-98 / 08-00	**19010/011 00**		**19063/064 00**		19052/055 00 2nd rear axle
FAT 75 CF 320 6x4	02-98 / 08-00	**19010/011 00**		**19063/064 00**		19052/055 00 2nd rear axle
FAT 75.270 6x4	07-92 / 02-98	**19010/011 00**		**19063/064 00**		19052/055 00 2nd rear axle
FAT 85.330 ATI 6x4	07-92 / 02-98	**19052/055 00**		**19063/064 00**		19063/064 00 2nd rear axle
FAT 85.360 ATI 6x4	07-92 / 02-98	**19052/055 00**		**19063/064 00**		19063/064 00 2nd rear axle
FAT 85.400 ATI 6x4	03-95 / 02-98	**19052/055 00**		**19063/064 00**		19063/064 00 2nd rear axle
FAV 65 CF 180 4x4	02-98 / 99	**19010/011 00**		**19063/064 00**		
FAV 65 CF 210	02-98 / 99	**19010/011 00**		**19063/064 00**		
FAV 65.180 4x4	03-93 / 02-98	**19010/011 00**		**19063/064 00**		
FAV 65.210	03-93 / 02-98	**19010/011 00**		**19063/064 00**		
FAV 75.240 4x4	07-92 / 02-98	**19010/011 00**		**19063/064 00**		
FAV 75.270 4x4	07-92 / 02-98	**19010/011 00**		**19063/064 00**		
FD 2100	87 / 89	**19900/901 00**		**19888/889 00**		19256/260 00 rear optional
FD 2800	87 /	**19900/901 00**		**19888/889 00**		19256/260 00 rear optional
FF 1900	11-89 / 09-93	**19010/011 00**		**19052/055 00**		19256/260 00 rear optional
FF 2500	87 /	**19900/901 00**		**19888/889 00**		19256/260 00 rear optional
FMD 2825 DKTD 8x4	82 / 89	**19150/151 00**		**19256/260 00**		19150/151 00 2nd front axle 19256/260 00 2nd rear axle
FT 2100 DHR	80 / 83			**19150/151 00**		
FT 2100 DHT	86 / 89	**19150/151 00**		**19256/260 00**		
FT 2100 / 2105 DHR	83 / 89	**19150/151 00**		**19150/151 00**		
FT 2105 DHR	80 / 83			**19150/151 00**		
FT 2105 DHTD / DHT	83 / 89	**19150/151 00**		**19150/151 00**		
FT 2605 DK 4x2	72 / 89			**19256/260 00**		
FT 2605 DKA 4x2	72 / 89			**19256/260 00**		
FT 2800 DKS 4x2	74 / 89	**19150/151 00**		**19256/260 00**		
FT 2800 DKT 4x2	74 / 89	**19150/151 00**		**19256/260 00**		
FT 2800 DKTD 4x2	74 / 89	**19150/151 00**		**19256/260 00**		
FT 2800 DKV	86 / 89	**19150/151 00**				
FT 2805 DKV	86 / 89	**19150/151 00**				
FT 3200 KS	01-90 / 10-93	**19900/901 00**		**19890/891 00**		

MODEL / *MODELO*	YEAR - *AÑO*	FRONT *DELANTERA*	SYSTEM *SISTEMA*	REAR *TRASERA*	SYSTEM *SISTEMA*	OBS.
DAF TRUCKS						
FT 3600 DKZ	86 / 89	**19150/151 00**				19150/151 00 trailer axle
FT 75 CF 250 4x2	02-98 / 08-00	**19010/011 00**		**19063/064 00**		
FT 75 CF 320 4x2	02-98 / 08-00	**19010/011 00**		**19063/064 00**		
FT 75 GF 290 4x2	02-98 / 08-00	**19010/011 00**		**19063/064 00**		
FT 75.240 ATI 4x2	07-92 / 02-98	**19010/011 00**		**19063/064 00**		
FT 75.270 4x2	07-92 / 02-98	**19010/011 00**		**19063/064 00**		
FT 75.300 4x2	07-92 / 02-98	**19010/011 00**		**19063/064 00**		
FT 85 CF 340 4x2	02-98 / 08-00	**19010/011 00**		**19063/064 00**		
FT 85 CF 380 4x2	02-98 / 08-00	**19010/011 00**		**19063/064 00**		
FT 85 CF 430 4x2	02-98 / 08-00	**19010/011 00**		**19063/064 00**		
FT 85.330 ATI 4x2	07-92 / 02-98	**19010/011 00**		**19063/064 00**		
FT 85.360 ATI 4x2	07-92 / 02-98	**19010/011 00**		**19063/064 00**		
FT 85.400 ATI 4x2	03-95 / 02-98	**19010/011 00**		**19063/064 00**		
FT / FA 2500 DHS	83 / 89	**19150/151 00**		**19256/260 00**		19256/260 00 2nd rear axle
FTG 85.330 6x2 / 6x4	07-92 / 02-98	**19052/055 00**		**19010/011 00**		19063/064 00 2nd rear axle
FTG 85.360 6x2 / 6x4	07-92 / 02-98	**19052/055 00**		**19010/011 00**		19063/064 00 2nd rear axle
FTG 85.400 6x2 / 6x4	03-95 / 02-98	**19052/055 00**		**19010/011 00**		19063/064 00 2nd rear axle
FTR 3300 DKSE 6x2	83 / 89	**19150/151 00**		**19256/260 00**		19150/151 00 2nd rear axle
FTR 3300 DKX 6x2	82 / 89	**19150/151 00**		**19256/260 00**		19150/151 00 2nd rear axle
FTS 2600 DK 6x2	72 / 89			**19256/260 00**		
FTS 2600 DKA 6x2	72 / 89			**19256/260 00**		
FTS / FTT 2200	83 / 89	**19150/151 00**		**19150/151 00**		
FTT 2600 DKA 6x4	72 / 89			**19256/260 00**		
FTT 2805 DKS 6x4	74 / 89	**19150/151 00**		**19256/260 00**		19150/151 00 2nd front axle
FTT 3325 DKX 6x4	82 / 89	**19150/151 00**		**19256/260 00**		19256/260 00 2nd rear axle
FTT 85.330 6x4	07-92 / 02-98	**19052/055 00**		**19063/064 00**		19063/064 00 2nd rear axle
FTT 85.360 ATI 6x4	07-92 / 02-98	**19052/055 00**		**19063/064 00**		19063/064 00 2nd rear axle
FTT 85.400 ATI 6x4	03-95 / 02-98	**19052/055 00**		**19063/064 00**		19063/064 00 2nd rear axle
MAG 2800 DKTL 6x2	82 / 89	**19150/151 00**		**19256/260 00**		19150/151 00 2nd front axle
N 2800 6x4	82 / 89	**19150/151 00**		**19256/260 00**		19256/260 00 2nd rear axle
Trailer axle 420 x 150,0 mm				**19900/901 00**		
Trailer axle 420 x 175,0 mm				**19888/889 00**		

DAIHATSU						
APPLAUSE 1.6	89 / 97	**PD/455**	Akebono			
CHARADE 1.0 / 1.3	91 / 94	**PD/455**	Akebono			
HIJET 1.0	92 /	**PD/330**	Akebono			
HIJET 1.2	96 /	**PD/330**	Akebono			
XENIA 1.0 / 1.3 / 1.5	05-07 /	**PD/1384**				

DATSUN						
DATSUN	70 / 84	**PD/587**				
ESTAQUITAS	70 / 86	**PD/587**				
ESTAQUITAS TX / A / B	70 / 95	**PD/587**				
SAMURAI	81 / 84	**PD/587**				
SAKURA	82 / 84	**PD/587**				

DENNIS						
ARROW	96 /	**PD/112**	Meritor			
DART MK I	89 /	**PD/112**	Meritor			
EAGLE	94 /	**PD/112**	Meritor	**PD/112**	Meritor	
JAVELIN III	95 /	**PD/112**	Meritor			
JAVELIN MK. II Coach				**19071 00**		
JAVELIN MK. III	91 /			**19068 00**		

MODEL / *MODELO*	YEAR - *AÑO*	FRONT *DELANTERA*	SYSTEM *SISTEMA*	REAR *TRASERA*	SYSTEM *SISTEMA*	OBS.
DENNIS						
RAPIER FIRE ENGINE - 22.5" Wheel	09-91 /	**PD/155-E**	See			
SABRE FIRE ENGINE - 22.5" Wheel	95 /	**PD/112**	Meritor			
TRIDENT SERIES	01 /	**PD/116**	Knorr	**PD/116**	Knorr	
DEUTZ						
6000	99 /	**PD/102**	Varga	**FD/72**	Bendix	
8500	97 /	**FD/77**	Master	**FD/77**	Master	
1600 D	83 / 85	**2042-A**		**FD/71**		
1600 D	90 / 94	**PD/102**	Varga	**FD/72**	Bendix	
1600 D 4x4	85 / 89	**PD/19-C**	Bendix	**FD/71**		
1800 D	/ 90	**2042-A**		**FD/71**		
1800 D	90 / 94	**PD/102**	Varga	**FD/72**	Bendix	
1800 Dinamic	90 /	**PD/102**	Varga	**FD/72**	Bendix	
4500 D	94 /	**PD/102**	Varga	**FD/72**	Bendix	
5000 D	94 /	**PD/102**	Varga	**FD/72**	Bendix	
7000 D Stark	93 /	**FD/77**	Master	**FD/77**	Master	
7500 TD Stark	94 /	**FD/77**	Master	**FD/77**	Master	
CAMION Y OMNIBUS		**9504**	Interfreno	**9530**	Interfreno	
OMNIBUS CHASIS ARBUS	90 /	**MB/142**		**CA/32-RA C**		
TX-1100	81 / 82			**2080-T**		
TX-1200	83 / 84			**2080-T**		
TX-1600	/ 90	**2042-A**		**FD/71**		
DFSK						
SERIE V PICK-UP 1.3		**PD/1330**				
V22 PICK-UP		**PD/1330**				
DIMEX - OMNIBUS Y CAMIONES						
D-1316-N Pesado Carga General	98 /	**FD/86**	Master	**4515-G-RA**		
D-1416 Pesado Carga General	98 /	**FD/86**	Master	**4707**		
D-1418-N Pesado Carga General	98 /	**4524-B-RA**		**4515-G-RA**		
D-1418-T Pesado Tractor c/ Plato	98 /	**4524-B-RA**		**4515-G-RA**		
D-1422-T	98 /	**4524-B-RA**		**4515-G-RA**		Ómnibus
D-1619-N Pesado Carga General	98 /	**4524-B-RA**		**4515-G-RA**		
D-1619-T Pesado Tractor c/ Plato	98 /	**4524-B-RA**		**4515-G-RA**		
D-1622-T	98 /	**4524-B-RA**		**4515-G-RA**		
D-1625-N Pesado Carga General	98 /	**4524-B-RA**		**4515-G-RA**		
D-1625-T Pesado Tractor c/ Plato	98 /	**4524-B-RA**		**4515-G-RA**		
D-1721 Pesado Tractor c/ Plato	98 /	**FD/87**	Master	**4707**		
D-1725 Pesado Tractor c/ Plato	98 /	**FD/87**	Master	**4707**		
D-1731-N Extrapesado Carga General	98 /	**4524-B-RA**		**4515-G-RA**		
D-1731-T Extrapesado Tractor c/ Plato	98 /	**4524-B-RA**		**4515-G-RA**		
D-1737 Extrapesado Tractor c/ Plato	98 /	**4524-B-RA**		**4515-G-RA**		
D-2731 Extrapesado Carga General	98 /	**4524-B-RA**				
D-916-M	98 /	**FD/77**	Master	**FD/77**	Master	Ómnibus
DINA						
D-1000	77 / 83	**PD/324**				
D-3000	75 / 83	**PD/541**				
D-3100	87 /	**PD/324**				
D-3130	84 / 87	**PD/324**				
D-3200	75 / 82	**PD/324**				

MODEL / *MODELO*	YEAR - *AÑO*	FRONT *DELANTERA*	SYSTEM *SISTEMA*	REAR *TRASERA*	SYSTEM *SISTEMA*	OBS.
DODGE						
DP-1000		**MB/141**		**MB/142**		
DP-900		**MB/141**		**MB/142**		
AD-150 4X2	87 / 92	**PD/545**				
ATITUDE	06 / 08					
ATOS	01 / 03	**PD/478**				
ATOS	04 / 09	**PD/535**				
AVENGER	08 / 09			**PD/723**		
AVENGER	08 /	**PD/631**				
AW-150 4X4	87 / 92	**PD/537**				
BREEZE	96 /	**PD/135**				
BREEZE	97 / 00	**PD/135**		**PD/392**		
CALIBER		**PD/734**				
CALIBER	07 / 09	**PD/631**		**PD/723**		
CALIBER SRT-4	08 / 09	**PD/1020**		**PD/632**		
D-100	73 / 83	**PD/537**				
D-100	84 / 93	**PD/545**				
D-150	81 / 90	**PD/537**				
D-250	84 / 93	**PD/545**				
D-250	86 / 90	**PD/537**				
D-250	91 / 93	**PD/545**				
D-300	73 / 83	**PD/537**				
D-350	81 / 93	**PD/537**				
D-350	91 / 93	**PD/545**				
D-350 USA	84 / 93	**PD/545**				
DAKOTA	98 /	**PD/485**		**FD/137-CP**		
DAKOTA	00 / 02	**PD/623**		**FD/137-CP**		
DAKOTA	96 /	**PD/779**				
DAKOTA	05 / 08	**PD/808**				
DAKOTA 2.5 TD	99 /	**PD/485**	K. Hayes	**FD/137-CP**		
DAKOTA 3.9 V6	99 /	**PD/485**	K. Hayes	**FD/137-CP**		
DAKOTA 5.2 V8	00 /	**PD/485**	K. Hayes	**FD/137-CP**		
DART	13 /	**PD/1426**		**PD/1428**		
DART 2.0	04-12/	**PD/1426**		**PD/1428**		
DART 2.4	04-12/	**PD/1426**		**PD/1428**		
DODGE 1000	08 / 09	**PD/377**				
DODGE 1500	80 / 91	**PD/317**	Tensa	**FD/70**		
DODGE 1500	71 / 72	**PD/316**	Importado	**FD/70**		
DODGE 1500 1.8	78 / 80	**PD/307**	Bendix	**FD/70**		
DODGE 1800	73 / 75	**PD/10**	Bendix	**CB/42**		
DODGE 1800	80 / 91	**PD/317**	Tensa	**FD/70**		
DODGE CHARGER	72 / 75	**PD/9**	Varga			
DODGE D/DP -100	68 / 81	**2038** **2038-T**		**2038** **2038-T**		
DODGE D/DP- 200	68 / 81	**2038** **2038-T**		**2038** **2038-T**		
DODGE D/DP-400	64 / 80	**2060**		**4564-A**		
DODGE D/DP-600	68 / 80	**9232**		**9233**		
DODGE D-1000	82 / 84	**4223-A**		**4311-J-RA**		
DODGE D-400	69 / 77	**2026-AT**		**2042-A**	Bendix	
DODGE D-400	78 / 83	**FD/73**		**FD/72**	Bendix	
DODGE D-500	64 / 80	**2060**		**4564-A**		
DODGE D-700	69 / 82	**2060**		**4564-A**		
DODGE D-750	69 / 82	**2060**		**4564-A**		
DODGE D-900	71 / 78	**659-B**		**4514-F**	Bendix	
DODGE D-950	75 / 83	**659-B**		**4514-F**	Bendix	

MODEL / *MODELO*	YEAR - *AÑO*	FRONT *DELANTERA*	SYSTEM *SISTEMA*	REAR *TRASERA*	SYSTEM *SISTEMA*	OBS.
DODGE						
DODGE DART	72 / 81	**PD/9**	Varga			
DODGE DP-1000		**MB/141**		**MB/142**		
DODGE DP-900		**MB/141**		**MB/142**		
DODGE E-13	81 / 85	**659-B**		**4514-F**	Bendix	
DODGE E-13	81 / 85			**4514-G**		
DODGE E-21	81 / 85			**4514-G**		
DODGE E-21	81 / 85	**659-B**		**4514-F**	Bendix	
DODGE JOURNEY 2.0 CRD 16V	08 /	**PD/1026**	Bosch			
DODGE JOURNEY 2.4	08 /	**PD/1026**	Bosch			
DODGE JOURNEY 2.7 V6	08 /	**PD/1026**	Bosch	**PD/300**	TRW	
DODGE LE BARON	79 / 81	**PD/9**	Varga			
DODGE MAGNUM	79 / 81	**PD/9**	Varga			
DODGE P-400	69 / 77	**2026-AT**		**2042-A**	Bendix	
DODGE P-700	69 / 82	**2060**		**4564-A**		
DODGE P-900	71 / 78	**659-B**		**4514-F**	Bendix	
DODGE POLARA	75 / 81	**PD/10**	Bendix	**CB/42**		
DODGE RT	72 / 81	**PD/9**	Varga			
DURANGO	98 / 99	**PD/485**				
DURANGO	03 /	**PD/758**		**PD/759**		
DURANGO	04 / 06	**PD/758**		**PD/584**		
DURANGO	07 / 08	**PD/808**		**PD/759**		
H-100 DIESEL	06 / 08	**PD/69**				
H-100 GASOLINA	03 / 05	**PD/473**				
INTREPID	94 / 97	**PD/396**		**PD/392**		
INTREPID	98 / 03	**PD/510**		**PD/392**		
INTREPID USA	94 / 97	**PD/396**				
JOURNEY	08/			**PD/1350**		
NEON LE / LX	95 / 99	**PD/492**		**PD/392**		
NEON LE / LX	00 / 06	**PD/515**		**PD/392**		
NEON RIN 13”	95 / 99	**PD/395**				
NEON SE	95 / 99	**PD/492**				
NEON SE	00 / 06	**PD/515**				
NEON SRT-4	04 / 05	**PD/515**		**PD/392**		
NEON SRT-4	04 / 06	**PD/531**		**PD/701**		
NITRO	07 / 09	**PD/1026**		**PD/1082**		
POLARA GT	68 / 72	**PD/9**		**2012-B** **2012-BT**		
POLARA GT	73 / 80	**PD/9**		**8020**		
POLARA GTX	68 / 72	**PD/9**		**2012-B** **2012-BT**		
POLARA GTX	73 / 80	**PD/9**		**8020**		
RAM 1500	94 / 97	**PD/502**	Bendix			
RAM 1500	03 / 08	**PD/637**				
RAM 1500	03 / 04	**PD/758**				
RAM 1500	94 / 99	**PD/502**				
RAM 1501 4X4	94 / 99	**PD/502**				
RAM 1502 4X4	00 / 01	**PD/565**				
RAM 1503 4X4	00 /	**PD/576**				
RAM 1504	01 /	**PD/627**				
RAM 1505	02 /	**PD/583**		**PD/584**		
RAM 1506	03 / 04	**PD/758**		**PD/584**		
RAM 1507	05 /	**PD/758**		**PD/759**		
RAM 1508	06 / 07	**PD/808**		**PD/759**		
RAM 2500	94 / 99	**PD/548**	Bendix			

MODEL / *MODELO*	YEAR - *AÑO*	FRONT *DELANTERA*	SYSTEM *SISTEMA*	REAR *TRASERA*	SYSTEM *SISTEMA*	OBS.
DODGE						
RAM 2500	94 / 99	**PD/551**	Bendix			
RAM 2500	03 / 08	**PD/637**				
RAM 2500	94 / 99	**PD/548**				
RAM 2500 QuaDCab 4.7L / 5.2L / 5.7L	02 /	**PD/637**		**PD/1057**		
RAM 2500 QuaDCab 5.2L / 5.9L	01 /	**PD/576**		**PD/1057**		
RAM 2501 4X4	94 / 99	**PD/548**				
RAM 2502	00 /	**PD/576**				
RAM 2503	01 / 02	**PD/576**		**PD/565**		
RAM 2504	03 /	**PD/637**		**PD/565**		
RAM 2505	04 /	**PD/758**		**PD/584**		
RAM 2506	05 / 08	**PD/637**		**PD/759**		
RAM 2507 USA	94 / 97	**PD/548**				
RAM 3500	94 / 99	**PD/551**	Bendix			
RAM 3500	03 / 08	**PD/637**				
RAM 3500	94 / 00	**PD/552**				
RAM 3501	94 / 00	**PD/552**				
RAM 3502	01 / 02	**PD/576**				
RAM 3503	02 /	**PD/576**		**PD/565**		
RAM 3504	02 /	**PD/569**		**PD/565**		
RAM 3505 USA	98 / 99	**PD/548**				
RAM 4000	96 / 97	**PD/545**				
RAM 4001	01 / 04	**PD/552**				
RAM 4002	02 /	**PD/576**				
RAM 4003	02 /	**PD/576**		**PD/565**		
RAM 4004	03 / 08	**PD/637**		**PD/565**		
RAM CHARGER	99 / 01	**PD/576**				
RAM CHARGER 5.2L / 5.9L	87 / 96	**PD/545**				
RAM CHARGER 4X4	99 /	**PD/576**				
RAM VAN 1500 3.9L	95 / 97	**PD/545**				
RAM VAN 1501 3.9L	98 / 02	**PD/569**				
RAM VAN 1502 3.9L	03 /	**PD/757**		**PD/759**		
RAM VAN 2500 5.2L	95 / 97	**PD/545**				
RAM VAN 2501 5.2L	98 / 02	**PD/777**				
RAM VAN 3500	96 / 98	**PD/545**				
RAM VAN 3501	99 / 02	**PD/777**				
RAM VAN 3502 USA	84 / 93	**PD/545**				
RAM WAGON 1500	95 / 97	**PD/545**				
RAM WAGON 1500	98 / 02	**PD/569**				
RAM WAGON 1500	03 /	**PD/757**		**PD/759**		
RAM WAGON 2500	95 / 97	**PD/545**				
RAM WAGON 2500	98 / 02	**PD/777**				
RAM WAGON 3500	94 / 98	**PD/545**				
RAM WAGON 3500	99 / 02	**PD/777**				
RAM WAGON 3500 USA	84 / 93	**PD/545**				
STRATUS	01 / 07	**PD/134**		**PD/392**		
STRATUS RIN 14"	95 / 00	**PD/135**				
STRATUS RIN 15"	95 / 00	**PD/135**		**PD/392**		
STRATUS RIN 15"	98 / 00	**PD/135**		**PD/392**		
VERNA	04 / 06	**PD/382**				
VERNA	04 / 06	**PD/549**				
W-150	85 / 87	**PD/545**				
W-250	86 / 93	**PD/545**				
WM-300	84 / 87	**PD/545**				

MODEL / *MODELO*	YEAR - *AÑO*	FRONT *DELANTERA*	SYSTEM *SISTEMA*	REAR *TRASERA*	SYSTEM *SISTEMA*	OBS.
DORSEY						
419 x 219,1 mm				**19369/370 00**		ROR Axle
420 x 200,0 mm				**19094 00**		BPW Axle
DRESSER						
130 M 165 SSA		**TR/328**		**TR/328**		
140 S 225 SSA		**TR/328**		**TR/328**		
165 S		**TR/328**		**TR/328**		
660 M				**659-B**		
MOTONIVELADORA 225-SSA				**PD/29**		
EFFA						
M-100 1.0 8V	07 /	**PD/1330**				
EL DETALLE						
OA-101	92 /	**4524-B-RA**	Master	**4515-G-RA**	Master	
OA-101	92 /	**MB/141 MB/141-RA**	Master	**AC/30-RA**	Master	
OA-101	92 /	**MB/141 MB/141-RA**	Master	**CA/32-RA-C**	Master	
OA-101	92 /	**4515-G-RA**	Master	**CA/32-RA-C**	Master	
OA-101	92 /	**AC/10 AC/10-RA**	Eaton	**AC/11 AC/11-RA**	Eaton	
OA-102	92 /	**4524-B-RA**	Master	**4515-G-RA**	Master	
OA-102	92 /	**MB/141 MB/141-RA**	Master	**AC/30-RA**	Master	
OA-102	92 /	**MB/141 MB/141-RA**	Master	**CA/32-RA-C**	Master	
OA-102	92 /	**4515-G-RA**	Master	**CA/32-RA-C**	Master	
OA-102	92 /	**AC/10 AC/10-RA**	Eaton	**AC/11 AC/11-RA**	Eaton	
OA-104 Góndola	92 /	**4311-J-RA**		**4674 7674-RA**	Eaton	
OA-104 Reformas				**4710**		
OA-104 Reformas				**AC/18**		
OA-105	97 /	**PD/125**		**AC/17 AC/17-RA**		
EJES						
EJE WEBB DIRECCIONAL				**4715**		
EJES BOERO	Todos			**AC/30 (18)**		
EJES BOERO	Todos			**CA/32**		
EJES CASTELCOORP	Todos			**CA/32**		
EJES DORREGO	Todos			**AC/30**		
EJES DORREGO	Todos			**CA/32**		
EJES FREPILCO	Todos			**AC/30**		
EJES MATRIPAR	Todos			**AC/30 (18)**		
EJES METROFUND	Todos			**AC/30 (18)**		
EJES METROFUND	Todos			**CA/32**		
EJES PENTRON	Todos			**AC/30**		
EJES REGA	Todos			**FD/77**		
EJES REGA	Todos			**FD/87**		
EJES REGA	Todos			**AC/30 (18)**		
EJES REGA	Todos			**CA/32**		
EJES SABINO	Todos			**AC/30 (18)**		
EJES SABINO	Todos			**CA/32**		
EJES SOLERO	Todos			**AC/30 (18)**		
EJES SOLERO	Todos			**CA/32**		

MODEL / *MODELO*	YEAR - *AÑO*	FRONT *DELANTERA*	SYSTEM *SISTEMA*	REAR *TRASERA*	SYSTEM *SISTEMA*	OBS.
EJES						
EJES TAFOR	Todos			**AC/30 (18)**		
EJES TAFOR	Todos			**CA/32**		
ENGESA-FNV (Fruehauf)						
CARRETA	/ 80			**4515-C** **4515-G**		
CARRETA	80 /			**4515-C** **4515-G** **CA/32**	Master	
ERF						
16G2 (4x2 Rigids)	75 / 83	**19111 00**		**19371 00**		
25C3 / 25R3	75 / 83	**19111 00**		**19371 00**		
25G3 (6x2 / 6x4 Rigids)	75 / 83	**19111 00**		**19111 00**		19111 00 2nd rear axle
25G3 (6x2 / 6x4)	75 / 83	**19111 00**		**19371 00**		19371 00 2nd rear axle
31C4 / 31 R4 (8x2 / 8x4 Rigids)	75 / 83	**19111 00**		**19371 00**		19111 00 2nd front axle 19371 00 2nd rear axle
31G2 (6x2 / 6x4 Tractors)	78 / 83	**19111 00**		**19371 00**		19371 00 2nd rear axle
31G2 / 34G2 / 3502 (4x2 Tractors)	75 / 83	**19111 00**		**19371 00**		
32G4 (8x2 / 8x4 Rigids)	75 / 83	**19111 00**		**19371 00**		19111 00 2nd front axle 19371 00 2nd rear axle
35G2 (6x2 / 6x4 Tractors)	78 / 83	**19111 00**		**19371 00**		19371 00 2nd rear axle
35R2 / 38G2 (4x2 Tractors)	75 / 83	**19111 00**		**19371 00**		
38G2 (6x2 / 6x4 Tractors)	78 / 83	**19111 00**		**19371 00**		19371 00 2nd rear axle
38R2 / 40C2 / 40G2 (4x2 Tractors)	78 / 83	**19111 00**		**19371 00**		
40C2 (6x2 / 6x4 Tractors)	78 / 83	**19111 00**		**19371 00**		19371 00 2nd rear axle
40C3 (6x2 / 6x4 Tractors)	78 / 83	**19111 00**		**19371 00**		19371 00 2nd rear axle
40G2 (6x2 / 6x4 Tractors)	79 / 83	**19111 00**		**19371 00**		19371 00 2nd rear axle
40R2 (6x2 / 6x4 Tractors)	78 / 83	**19111 00**		**19371 00**		19371 00 2nd rear axle
40R2TR (6x2 / 6x4 Tractors)		**19111 00**		**19371 00**		19371 00 2nd rear axle
C36 / C40	82 / 86	**19111 00**		**19371 00**		
C36 / C40	82 / 86	**19371 00**		**19371 00**		
C38	84 / 86	**19111 00**		**19371 00**		
C38	84 / 86	**19371 00**		**19371 00**		
CP 28 / 32.250 (4x2 Tractors)	84 / 86	**19111 00**		**19371 00**		
CP 28 / 32.250 (4x2 Tractors)	84 / 86	**19371 00**		**19371 00**		
CP 32.290 (4x2 Tractors)	84 / 86	**19111 00**		**19371 00**		
CP 32.290 (4x2 Tractors)	84 / 86	**19371 00**		**19371 00**		
CP 32.290 (4x2 Tractors)	84 / 86	**19111 00**		**19371 00**		
CP 32.290 (4x2 Tractors)	84 / 86	**19371 00**		**19371 00**		
CP 38.250 (4x2 Tractors)	84 / 86	**19111 00**		**19371 00**		
CP 38.250 (4x2 Tractors)	84 / 86	**19371 00**		**19371 00**		
CP 38.250 / CP 38.290 / CP 38.320 (6x2 Twinsteer Tractors)	84 / 86	**19111 00**		**19371 00**		19371 00 2nd rear axle
CP 38.250 / CP 38.290 / CP 38.320 (6x2 Twinsteer Tractors)	84 / 86	**19371 00**		**19371 00**		19371 00 2nd rear axle
CP 38.290 / CP 38.320 (6x4 Double Line)	84 / 86	**19111 00**		**19371 00**		19371 00 2nd rear axle
CP 38.290 / CP 38.320 (6x4 Double Line)	84 / 86	**19371 00**		**19371 00**		19371 00 2nd rear axle
CP 38.320 (4x2 Tractors)	84 / 86	**19111 00**		**19371 00**		
CP 38.320 (4x2 Tractors)	84 / 86	**19371 00**		**19371 00**		
E 10.25 (6x4 Rigids)	91 / 09-93	**19071 00**		**19071 00**		19071 00 2nd rear axle
E 10.25 (8x4 Rigids)	91 / 09-93	**19071 00**		**19071 00**		19071 00 2nd front axle 19071 00 2nd rear axle
E 10.25 D5 (4x2 Drawbars)	86 / 90	**19371 00**		**19371 00**		
E 10.25 R	86 / 90	**19111 00**		**19371 00**		
E 10.25 ST (4x2 Tractors)	86 / 90	**19371 00**		**19371 00**		

MODEL / *MODELO*	YEAR - *AÑO*	FRONT *DELANTERA*	SYSTEM *SISTEMA*	REAR *TRASERA*	SYSTEM *SISTEMA*	OBS.
ERF						
E 10.25 T2 (6x2 Rigids / Tippers & Tractors)	86 / 90	**19371 00**		**19371 00**		19371 00 2nd rear axle
E 10.25 / E 10.27 / E 10.32	91 / 09-93	**19071 00**		**19071 00**		
E 10.27 (6x4 Rigids)	91 / 09-93	**19071 00**		**19071 00**		19071 00 2nd rear axle
E 10.27 (8x4 Rigids)	91 / 09-93	**19071 00**		**19071 00**		19071 00 2nd front axle 19071 00 2nd rear axle
E 10.29 D5 (4x2 Drawbars)	86 / 90	**19371 00**		**19371 00**		
E 10.29 R	86 / 90	**19111 00**		**19371 00**		
E 10.29 ST (4x2 Tractors)	86 / 90	**19371 00**		**19371 00**		
E 10.29 TT (6x2 Rigids / Tippers & Tractors)	86 / 90	**19371 00**		**19371 00**		19371 00 2nd rear axle
E 10.32 (8x4 Rigids)	91 / 09-93	**19071 00**		**19071 00**		19071 00 2nd front axle 19071 00 2nd rear axle
E 10.32 DT (6x4 Tractors)	91 / 09-93	**19071 00**		**19071 00**		19071 00 2nd rear axle
E 10.32 TT Twinsteer (6x2 Tractors)	91 / 09-93	**19071 00**		**19071 00**		19071 00 2nd rear axle
E 12.26 ST (4x2 Tractors)	86 / 90	**19371 00**		**19371 00**		
E 12.27 ST (4x2 Tractors)	86 / 90	**19371 00**		**19371 00**		
E 12.30 (8x4 Rigids)	91 / 09-93	**19071 00**		**19071 00**		19071 00 2nd front axle 19071 00 2nd rear axle
E 12.30 ST (4x2 Tractors)	86 / 90	**19371 00**		**19371 00**		
E 12.30 TT Twinsteer (6x2 Rigids / Tippers & Tractors)	86 / 90	**19371 00**		**19371 00**		19371 00 2nd rear axle
E 12.32 (8x4 Rigids)	91 / 09-93	**19071 00**		**19071 00**		19071 00 2nd front axle 19071 00 2nd rear axle
E 12.32 ST / E 12.37 ST	91 / 09-93	**19071 00**		**19071 00**		
E 12.32 TT Twinsteer (6x2 Tractors)	91 / 09-93	**19071 00**		**19071 00**		19071 00 2nd rear axle
E 12.34 DT Doubledrive (6x4 Tractors)	86 / 90	**19371 00**		**19371 00**		19371 00 2nd rear axle
E 12.34 ST (4x2 Tractors)	86 / 90	**19371 00**		**19371 00**		
E 12.37 TT Twinsteer (6x2 Tractors)	91 / 09-93	**19071 00**		**19071 00**		19071 00 2nd rear axle
E 12.40 ST / E 14.32 ST	91 / 09-93	**19071 00**		**19071 00**		
E 12.40 TT Twinsteer (6x2 Tractors)	91 / 09-93	**19071 00**		**19071 00**		19071 00 2nd rear axle
E 14.32 ST (4x2 Tractors)	86 / 90	**19371 00**		**19371 00**		
E 14.32 TT Twinsteer (6x2 Tractors)	91 / 09-93	**19071 00**		**19071 00**		19071 00 2nd rear axle
E 14.32 TT Twinsteer (6x2 Rigids / Tippers & Tractors)	86 / 90	**19371 00**		**19371 00**		19371 00 2nd rear axle
E 14.35 DT Doubledrive (6x4 Tractors)	86 / 90	**19371 00**		**19371 00**		19371 00 2nd rear axle
E 14.35 ST (4x2 Tractors)	86 / 90	**19371 00**		**19371 00**		
E 14.36 ST / E 14.41 ST	91 / 09-93	**19071 00**		**19071 00**		
E 14.36 TT Twinsteer (6x2 Tractors)	91 / 09-93	**19071 00**		**19071 00**		19071 00 2nd rear axle
E 14.41 DT (6x4 Tractors)	91 / 09-93	**19071 00**		**19071 00**		19071 00 2nd rear axle
E 14.46 DT (6x4 Tractors)	91 / 09-93	**19071 00**		**19071 00**		19071 00 2nd rear axle
E 14.46 ST	91 / 09-93	**19071 00**		**19071 00**		
E 16.32 DT Doubledrive (6x4 Tractors)	86 / 90	**19371 00**		**19371 00**		19371 00 2nd rear axle
E 6.18	91 / 09-93	**19071 00**		**19071 00**		
E 6.18 M16	87 / 90	**19371 00**		**19371 00**		
E 6.18 M16 (4x2 Rigids & Tippers)	86	**19111 00**		**19111 00**		
E 6.18 M16 Dropframe	87 / 90	**19371 00**		**19371 00**		
E 6.18 M16 Dropframe (4x2 Rigids & Tippers)	86	**19111 00**		**19111 00**		
E 6.21	91 / 09-93	**19071 00**		**19071 00**		
E 8.26 Drawbar (6x4 Rigids)	91 / 09-93	**19071 00**		**19071 00**		19071 00 2nd rear axle
E 8.26 / E 8.27	91 / 09-93	**19071 00**		**19071 00**		
E 8.27 (6x4 Rigids)	91 / 09-93	**19071 00**		**19071 00**		19071 00 2nd rear axle
E 8.27 (8x4 Rigids)	91 / 09-93	**19071 00**		**19071 00**		19071 00 2nd front axle 19071 00 2nd rear axle
EC 10.30 / EC 10.32 / EC 10.35 (4x2 Tractors & Drawbars)	09-93 /	**19071 00**		**19071 00**		
EC 10.30 / EC 10.32 / EC 10.35 (4x2 Tractors & Drawbars)	09-93 / 04-96	**19553/554 00**		**19553/554 00**		ROR brakes old implement

MODEL / *MODELO*	YEAR - *AÑO*	FRONT *DELANTERA*	SYSTEM *SISTEMA*	REAR *TRASERA*	SYSTEM *SISTEMA*	OBS.
ERF						
EC 10.30 / EC 10.32 / EC 10.35 (4x2 Tractors & Drawbars)	05-96 /	**19716 00**		**19716 00**		ROR brakes new implement
EC 10.30 / EC 10.32 / EC 10.35 (8x4 Rigids)	09-93 /	**19071 00**		**19071 00**		19071 00 2nd front axle 19071 00 2nd rear axle
EC 10.30 / EC 10.32 / EC 10.35 (8x4 Rigids)	09-93 / 04-96	**19553/554 00**		**19553/554 00**		
EC 10.30 / EC 10.32 / EC 10.35 (8x4 Rigids)	05-96 /	**19716 00**		**19716 00**		
EC 10.32 / EC 10.35 (6x2 Twinsteer Tractors)	05-93 /	**19071 00**		**19071 00**		19071 00 2nd rear axle
EC 10.32 / EC 10.35 (6x2 Twinsteer Tractors)	05-93 / 04-96	**19553/554 00**		**19553/554 00**		19071 00 2nd rear axle
EC 10.32 / EC 10.35 (6x2 Twinsteer Tractors)	05-96 /	**19716 00**		**19716 00**		19071 00 2nd rear axle
EC 10.32 / EC 10.35 (6x2 / 6x4 Tractors)	05-93 /	**19071 00**		**19071 00**		19071 00 2nd rear axle
EC 10.32 / EC 10.35 (6x2 / 6x4 Tractors)	05-93 / 04-96	**19553/554 00**		**19553/554 00**		19071 00 2nd rear axle
EC 10.32 / EC 10.35 (6x2 / 6x4 Tractors)	05-96 /	**19716 00**		**19716 00**		19071 00 2nd rear axle
EC 11.305	09-95 /	**19071 00**		**19071 00**		
EC 11.305	09-95 / 04-96	**19553/554 00**		**19553/554 00**		ROR brakes old implement
EC 11.305	05-96 /	**19716 00**		**19716 00**		ROR brakes new implement
EC 11.340	09-95 /	**19071 00**		**19071 00**		
EC 11.340	09-95 / 04-96	**19553/554 00**		**19553/554 00**		ROR brakes old implement
EC 11.340	05-96 /	**19716 00**		**19716 00**		ROR brakes new implement
EC 11.380	09-95 /	**19071 00**		**19071 00**		
EC 11.380	09-95 / 04-96	**19553/554 00**		**19553/554 00**		ROR brakes old implement
EC 11.380	05-96 /	**19716 00**		**19716 00**		ROR brakes new implement
EC 12.33 (8x4 Rigids)	09-93 /	**19071 00**		**19071 00**		19071 00 2nd front axle 19071 00 2nd rear axle
EC 12.33 (8x4 Rigids)	09-93 / 04-96	**19553/554 00**		**19553/554 00**		
EC 12.33 (8x4 Rigids)	05-96 /	**19716 00**		**19716 00**		
EC 12.33 / EC 12.37 / EC 12.40 (4x2 Tractors & Drawbars)	09-93 /	**19071 00**		**19071 00**		
EC 12.33 / EC 12.37 / EC 12.40 (4x2 Tractors & Drawbars)	09-93 / 04-96	**19553/554 00**		**19553/554 00**		ROR brakes old implement
EC 12.33 / EC 12.37 / EC 12.40 (4x2 Tractors & Drawbars)	05-96 /	**19716 00**		**19716 00**		ROR brakes new implement
EC 12.33 / EC 12.37 / EC 12.40 (6x2 Twinsteer Tractors)	05-93 /	**19071 00**		**19071 00**		19071 00 2nd rear axle
EC 12.33 / EC 12.37 / EC 12.40 (6x2 Twinsteer Tractors)	05-93 / 04-96	**19553/554 00**		**19553/554 00**		19071 00 2nd rear axle
EC 12.33 / EC 12.37 / EC 12.40 (6x2 Twinsteer Tractors)	05-96 /	**19716 00**		**19716 00**		19071 00 2nd rear axle
EC 12.33 / EC 12.37 / EC 12.40 (6x2 / 6x4 Tractors)	05-93 /	**19071 00**		**19071 00**		19071 00 2nd rear axle
EC 12.33 / EC 12.37 / EC 12.40 (6x2 / 6x4 Tractors)	05-93 / 04-96	**19553/554 00**		**19553/554 00**		19071 00 2nd rear axle
EC 12.33 / EC 12.37 / EC 12.40 (6x2 / 6x4 Tractors)	05-96 /	**19716 00**		**19716 00**		19071 00 2nd rear axle
EC 14.34 / EC 14.38 / EC 14.41 (4x2 Tractors & Drawbars)	09-93 /	**19071 00**		**19071 00**		
EC 14.34 / EC 14.38 / EC 14.41 (4x2 Tractors & Drawbars)	09-93 / 04-96	**19553/554 00**		**19553/554 00**		ROR brakes old implement
EC 14.34 / EC 14.38 / EC 14.41 (4x2 Tractors & Drawbars)	05-96 /	**19716 00**		**19716 00**		ROR brakes new implement
EC 14.34 / EC 14.38 / EC 14.41 (6x2 Twinsteer Tractors)	05-93 /	**19071 00**		**19071 00**		19071 00 2nd rear axle
EC 14.34 / EC 14.38 / EC 14.41 (6x2 Twinsteer Tractors)	05-93 / 04-96	**19553/554 00**		**19553/554 00**		19071 00 2nd rear axle
EC 14.34 / EC 14.38 / EC 14.41 (6x2 Twinsteer Tractors)	05-96 /	**19716 00**		**19716 00**		19071 00 2nd rear axle
EC 14.34 /6014.38 / EC 14.41 (6x2 / 6x4 Tractors)	05-93 /	**19071 00**		**19071 00**		19071 00 2nd rear axle
EC 14.34 /6014.38 / EC 14.41 (6x2 / 6x4 Tractors)	05-93 / 04-96	**19553/554 00**		**19553/554 00**		19071 00 2nd rear axle
EC 14.34 /6014.38 / EC 14.41 (6x2 / 6x4 Tractors)	05-96 /	**19716 00**		**19716 00**		19071 00 2nd rear axle

MODEL / *MODELO*	YEAR - *AÑO*	FRONT *DELANTERA*	SYSTEM *SISTEMA*	REAR *TRASERA*	SYSTEM *SISTEMA*	OBS.
ERF						
EC 14.50 / EC 14.52 (4x2 Tractors & Drawbars)	09-93 /	**19071 00**		**19071 00**		
EC 14.50 / EC 14.52 (4x2 Tractors & Drawbars)	09-93 / 04-96	**19553/554 00**		**19553/554 00**		ROR brakes old implement
EC 14.50 / EC 14.52 (4x2 Tractors & Drawbars)	05-96 /	**19716 00**		**19716 00**		ROR brakes new implement
EC 14.50 / EC 14.52 (6x2 Twinsteer Tractors)	05-93 /	**19071 00**		**19071 00**		19071 00 2nd rear axle
EC 14.50 / EC 14.52 (6x2 Twinsteer Tractors)	05-93 / 04-96	**19553/554 00**		**19553/554 00**		19071 00 2nd rear axle
EC 14.50 / EC 14.52 (6x2 Twinsteer Tractors)	05-96 /	**19716 00**		**19716 00**		19071 00 2nd rear axle
EC 14.50 / EC 14.52 (6x2 / 6x4 Tractors)	05-93 /	**19071 00**		**19071 00**		19071 00 2nd rear axle
EC 14.50 / EC 14.52 (6x2 / 6x4 Tractors)	05-93 / 04-96	**19553/554 00**		**19553/554 00**		19071 00 2nd rear axle
EC 14.50 / EC 14.52 (6x2 / 6x4 Tractors)	05-96 /	**19716 00**		**19716 00**		19071 00 2nd rear axle
EC 6.18 / EC 6.21 (4x2 Tractors & Drawbars)	95 /	**19071 00**		**19071 00**		
EC 6.18 / EC 6.21 (4x2 Tractors & Drawbars)	95 / 04-96	**19553/554 00**		**19553/554 00**		ROR brakes old implement
EC 6.18 / EC 6.21 (4x2 Tractors & Drawbars)	05-96 /	**19716 00**		**19716 00**		ROR brakes new implement
EC 6.21 (4x2 Rigids)	09-93 /	**19071 00**		**19071 00**		
EC 6.21 (4x2 Rigids)	09-93 / 04-96	**19553/554 00**		**19553/554 00**		ROR brakes old implement
EC 6.21 (4x2 Rigids)	05-96 /	**19716 00**		**19716 00**		ROR brakes new implement
EC 8.24 / EC 8.27 (4x2 Tractors & Drawbars)	09-93 /	**19071 00**		**19071 00**		
EC 8.24 / EC 8.27 (4x2 Tractors & Drawbars)	09-93 / 04-96	**19553/554 00**		**19553/554 00**		ROR brakes old implement
EC 8.24 / EC 8.27 (4x2 Tractors & Drawbars)	05-96 /	**19716 00**		**19716 00**		ROR brakes new implement
EC 8.24 / EC 8.27 (6x4 Rigids & Drawbars)	09-93 /	**19071 00**		**19071 00**		19071 00 2nd rear axle
EC 8.24 / EC 8.27 (6x4 Rigids & Drawbars)	09-93 / 04-96	**19553/554 00**		**19553/554 00**		19071 00 2nd rear axle
EC 8.24 / EC 8.27 (6x4 Rigids & Drawbars)	05-96 /	**19716 00**		**19716 00**		19071 00 2nd rear axle
EC 8.27 (8x4 Rigids)	95 /	**19071 00**		**19071 00**		19071 00 2nd front axle 19071 00 2nd rear axle
EC 8.27 (8x4 Rigids)	95 / 04-96	**19553/554 00**		**19553/554 00**		
EC 8.27 (8x4 Rigids)	05-96 /	**19716 00**		**19716 00**		
EC10.30 / EC 10.32 / EC 10.35 (6x4 Rigids & Drawbars)	09-93 /	**19071 00**		**19071 00**		19071 00 2nd rear axle
EC10.30 / EC 10.32 / EC 10.35 (6x4 Rigids & Drawbars)	09-93 / 04-96	**19553/554 00**		**19553/554 00**		19071 00 2nd rear axle
EC10.30 / EC 10.32 / EC 10.35 (6x4 Rigids & Drawbars)	05-96 /	**19716 00**		**19716 00**		19071 00 2nd rear axle
ECL / ECM / ECT - SERIES	02 /	**PD/129**	Meritor	**PD/129**	Meritor	
ECL / ECM / ECT - SERIES	02 /	**PD/116**	Knorr	**PD/116**	Knorr	
ECS - SERIES	00 /	**PD/125**	Meritor	**PD/125**	Meritor	
ECX - SERIES (all w/MAN axles)	00 / 09-01	**PD/125**	Meritor	**PD/125**	Meritor	
ECX - SERIES (all w/MAN axles)	10-01 / 04- 02	**PD/129**	Meritor	**PD/129**	Meritor	
ES 6.18	91 / 09-93	**19071 00**		**19071 00**		
ES 6.18 (4x2Rigids)	95 /	**19071 00**		**19071 00**		
ES 6.18 (4x2Rigids)	95 / 04-96	**19553/554 00**		**19553/554 00**		ROR brakes old implement
ES 6.18 (4x2Rigids)	05-96 /	**19716 00**		**19716 00**		ROR brakes new implement
ES 6.18 (EURO1)	09-93 / 04-96	**19553/554 00**		**19553/554 00**		ROR brakes old implement
ES 6.18 (EURO1)	05-96 /	**19716 00**		**19716 00**		ROR brakes new implement
ES 6.18 Dropframe	91 / 09-93	**19071 00**		**19071 00**		
ES 6.19	87 / 09-93	**19371 00**		**19371 00**		
ES 6.19	89 / 09-93	**19090 00**		**19090 00**		Lucas 7" Brake
ES 6.19	89 / 09-93	**19071 00**		**19071 00**		Lucas 8" Brake
ES 6.21 (EURO2)	09-93 / 04-96	**19553/554 00**		**19553/554 00**		ROR brakes old implement

MODEL / *MODELO*	YEAR - *AÑO*	FRONT *DELANTERA*	SYSTEM *SISTEMA*	REAR *TRASERA*	SYSTEM *SISTEMA*	OBS.
ERF						
ES 6.21 (EURO2)	05-96 /	**19716 00**		**19716 00**		ROR brakes new implement
ES 8.21 (6x4 Rigids)	91 / 09-93	**19071 00**		**19071 00**		19071 00 2nd rear axle
ES 8.24 (EURO1) (6x4 Rigids & Tippers)	09-93 /	**19071 00**		**19071 00**		19071 00 2nd rear axle
ES 8.24 (EURO1) (6x4 Rigids & Tippers)	09-93 / 04-96	**19553/554 00**		**19553/554 00**		19071 00 2nd rear axle
ES 8.24 (EURO1) (6x4 Rigids & Tippers)	05-96 /	**19716 00**		**19716 00**		19071 00 2nd rear axle
ES 8.24 / ES 8.27 (6x4 Rigids & Drawbars)	95 /	**19071 00**		**19071 00**		19071 00 2nd rear axle
ES 8.24 / ES 8.27 (6x4 Rigids & Drawbars)	95 / 04-96	**19553/554 00**		**19553/554 00**		19071 00 2nd rear axle
ES 8.24 / ES 8.27 (6x4 Rigids & Drawbars)	05-96 /	**19716 00**		**19716 00**		19071 00 2nd rear axle
ES 8.27 (6x4 Rigids)	91 / 09-93	**19071 00**		**19071 00**		19071 00 2nd rear axle
ES 8.27 (EURO1) (6x4 Rigids & Tippers)	09-93 /	**19071 00**		**19071 00**		19071 00 2nd rear axle
ES 8.27 (EURO1) (6x4 Rigids & Tippers)	09-93 / 04-96	**19553/554 00**		**19553/554 00**		19071 00 2nd rear axle
ES 8.27 (EURO1) (6x4 Rigids & Tippers)	05-96 /	**19716 00**		**19716 00**		19071 00 2nd rear axle
EATON						
419 X 177,8 mm				**19896 00**		
419 X 177,8 mm				**FMSI 4708**		
419 X 177,8 mm				**FMSI 4709**		
FACHINI						
CARRETA	/ 99			**CA/32**	Master	
CARRETA	00 /			**CA/33**	Master	
FAW						
F1	08 / 09	**PD/1391**				
F4 LATIN AMERICA	08 / 09	**PD/1392**				
F5	08 / 09	**PD/789**				
FAW		**F/957**		**F/957**		
FOTON		**F/957**		**F/957**		
FERRARI						
F512 5.0l TR/M	92 / 96	**PD/1471**	Brembo			
FIAT - CAMIONES						
190	76 / 85	**4524-B**				
210	76 / 88	**4515-G**				
619		**9504**	Interfreno	**9530**	Interfreno	
643	69 / 88	**9244**	Fiat	**9245**	Fiat	
643		**9504**	Interfreno	**9530**	Interfreno	
673	73 / 80	**9232**	Fiat	**9233**	Fiat	
697		**9504**	Interfreno	**9530**	Interfreno	
130 AU	86 / 92	**9233**	Fiat	**9233**	Fiat	Ómnibus
150 N	86 /	**9233**	Fiat	**9233**	Fiat	
150 T	86 /	**9233**	Fiat	**9233**	Fiat	
160 AU	86 / 92	**9233**	Fiat	**9233**	Fiat	Ómnibus
341-A		**9504**	Interfreno	**9530**	Interfreno	
619 N / T	69 / 88	**9244**	Fiat	**9245**	Fiat	
697 N / T	69 / 88	**9244**	Fiat	**9245**	Fiat	
FIAT						
125 Multicarga / Familiar	74 / 82	**PD/313**	Girling	**FI/85 - S/F**		
125 Sedán / Coupé	74 / 82	**PD/313**	Girling	**FI/85 - S/F**		
128 1100	71 / 86	**PD/308**	Bendix	**8017-S/F**		

MODEL / *MODELO*	YEAR - *AÑO*	FRONT *DELANTERA*	SYSTEM *SISTEMA*	REAR *TRASERA*	SYSTEM *SISTEMA*	OBS.
FIAT						
128 1300	71 / 90	**PD/309**	Bendix	**8017-S/F**		
128 1300 IAVA	71 / 90	**PD/309**	Bendix	**8017-S/F**		
133	85 / 86	**PD/319**	Bendix	**8017-S/F**		
147	77 / 86	**PD/310**	Bendix	**8017-S/F**		
147	77 / 86	**PD/18**	Teves	**FI/90**	Teves	
147	77 / 86	**PD/10**	Bendix	**FI/90**	Teves	
147	85 / 86	**PD/319**	Bendix	**8017-S/F**		
147 BRIO	83 / 86	**PD/310**	Bendix	**8017-S/F**		
147 VIVACE	95 /	**PD/26**	Varga	**8017-S/F**		
500 ABARTH	13 /			**PD/1403**		
500 ABARTH CABRIO	14 /			**PD/1403**		
500 (Latin America)	08 / 11	**PD/509-A**	Bosch			
500 LOUNGE 1.4 16V DUALOGIC	09 /	**PD/509-B**	Bosch	**PD/1331**	Lucas	
500 LOUNGE 1.4 16V MECANICO	09 /	**PD/509-B**	Bosch	**PD/1331**	Lucas	
500 LOUNGE AIR 1.4 16V AUTOMATICO	11 /	**PD/88**	Bosch			
500 SPORT 1.4 16V DUALOGIC	09 /	**PD/509-B**	Bosch	**PD/1331**	Lucas	
500 SPORT 1.4 16V MECANICO	09 /	**PD/509-B**	Bosch	**PD/1331**	Lucas	
500 SPORT AIR 1.4 16V AUTOMATICO	11 /	**PD/88**	Bosch			
500	09/			**PD/1416**		
500C	09/			**PD/1416**		
600 Brasileros		**FI/90**	Teves	**FI/90**	Teves	
600 E / D / R / S	60 / 82	**8017-S/F**		**8017-S/F**		
700	60 / 78	**8017-S/F**		**8017-S/F**		
800 Coupé	60 / 78	**8017-S/F**		**8017-S/F**		
1500 Sedán / Coupé / Multicarga	66 / 70	**PD/313**	Girling	**FI/85 - S/F**		
1600 Sedán / Coupé	71 / 74	**PD/313**	Girling	**FI/85 - S/F**		
ADVENTURE	04 / 06	**PD/68**				
BARCHETTA 1.8 16V	95 /	**PD/403-B**	Teves	**PD/430**	Girling	
BARCHETTA 1.8 16V	95 /	**PD/484-A**	Girling	**PD/430**	Girling	
BARCHETTA 1.8 16V	07-97 /			**PD/439**	Girling	
BARCHETTA 1.8 16V CABRIO	95 /	**PD/484-A**	Girling	**PD/439**	Girling	
BRAVA 1.8 16V	95 /	**PD/403-B**	Teves	**PD/430**	Girling	
BRAVA 1.9 DS / SX	95 /	**PD/433-B**	Teves			
BRAVA 1.9 TD 75/100	95 /	**PD/66-A** **PD/66-B**	Teves			
BRAVA 2.0 i 20V HGT	95 /	**PD/66-A** **PD/66-B**	Teves	**PD/430**	Girling	
BRAVA ELX 1.6 16V	99 /	**PD/403-B**	Teves	**FI/91-S/F** **FI/91-CP** **FI/127-CPA**	Bosch Bosch Lockheed	
BRAVA HGT 1.8 16V	96 /	**PD/403-B**	Teves	**FI/91-S/F** **FI/91-CP** **FI/127-CPA**	Bosch Bosch Lockheed	
BRAVA SX 1.6 16V	99 /	**PD/403-B**	Teves	**FI/91-S/F** **FI/91-CP** **FI/127-CPA**	Bosch Bosch Lockheed	
BRAVO	11 /			**PD/1331**	Lucas	
BRAVO 1.4 i / 1.6 i 16V / 1.9 DS / SX	95 /	**PD/433-B**	Teves			
BRAVO 1.8 i 16V	95 /	**PD/403-B**	Teves	**PD/439**	Girling	
BRAVO 2.0 155 20V HGT	97 /			**PD/439**	Girling	
BRAVO 2.0 20V	96 /	**PD/66-A** **PD/66-B**	Teves	**PD/439**	Girling	
BRAVO 2.0 i 16V HGT	96 /	**PD/66-A** **PD/66-B**	Teves	**PD/430**	Girling	
BRAVO 1.4 16V	07 /	**PD/509-B**	Bosch			
BRAVO 1.4 T-JET	12 /	**PD/511-B**	Bosch	**PD/518**	Bosch	
BRAVO 1.4 T-JET	12 /	**PD/92**	Teves			

MODEL / *MODELO*	YEAR - *AÑO*	FRONT *DELANTERA*	SYSTEM *SISTEMA*	REAR *TRASERA*	SYSTEM *SISTEMA*	OBS.
FIAT						
BRAVO 1.4 16V T-JET IMPORTADO	10 /	**PD/673-B**	Bosch			
BRAVO 1.6 D MULTIJET	08 /	**PD/509-B**	Bosch			
BRAVO ABSOLUTE 1.8 16V	11 /	**PD/92-B**	Teves			
BRAVO ABSOLUTE DUALOGIC 1.8 16V	11 /	**PD/92-B**	Teves			
BRAVO ESSENCE 1.8 16V	11 /	**PD/92-B**	Teves			
BRAVO ESSENCE DUALOGIC 1.8 16V	11 /	**PD/92-B**	Teves			
COUPÉ 1.8 16V	95 / 97			**PD/439**	Girling	
COUPE 1.8 16V / 2.0 16V / Turbo / 20V	95 /	**PD/66-A** **PD/66-B**	Teves	**PD/439**	Girling	
COUPE 2.0 i 16V Confort / Turbo	95 /	**PD/66-A** **PD/66-B**	Teves	**PD/430**	Girling	
COUPE 2.0 i 16V Confort / Turbo	95 /	**PD/484-A**	Girling	**PD/430**	Girling	
COUPÉ 2.0i 16V	95 / 97	**PD/484-A**	Girling	**PD/439**	Girling	
COUPÉ 2.0i Turbo	95 / 97	**PD/484-A**	Girling	**PD/439**	Girling	
DOBLO	/ 06-09	**PD/68**	Teves	**FI/136-CP**		
DOBLO	07-09 /	**PD/88**	Teves	**FI/136-CP**		
DOBLO 1.3 16V CARGO	01 / 06-09	**PD/494**	Teves	**FI/136-CP**		
DOBLO 1.3 16V CARGO	07-09 /	**PD/88**	Teves	**FI/136-CP**		
DOBLO 1.3 16V EX PASSAGEIRO	01 / 06-09	**PD/494**	Teves	**FI/136-CP**		
DOBLO 1.3 16V EX PASSAGEIRO	07-09 /	**PD/88**	Teves	**FI/136-CP**		
DOBLO 1.6 16V CARGO	01 / 06-09	**PD/494**	Teves	**FI/136-CP**		
DOBLO 1.6 16V CARGO	07-09 /	**PD/88**	Teves	**FI/136-CP**		
DOBLO 1.6 16V ELX PASSAGEIRO	01 / 06-09	**PD/494**	Teves	**FI/136-CP**		
DOBLO 1.6 16V ELX PASSAGEIRO	07-09 /	**PD/88**	Teves	**FI/136-CP**		
DOBLO 1.8 ADVENTURE	06-02 / 03-10	**PD/78-A**	Teves	**FI/136-CP**		
DOBLO 1.8 ADVENTURE	04-10 /	**PD/92**	Teves	**FI/136-CP**		
DOBLO 1.8 CARGO	01 / 06-09	**PD/494**	Teves	**FI/136-CP**		
DOBLO 1.8 CARGO	07-09 /	**PD/88**	Teves	**FI/136-CP**		
DOBLO 1.8 PASSAGEIRO	01 / 06-09	**PD/494**	Teves	**FI/136-CP**		
DOBLO 1.8 PASSAGEIRO	07-09 /	**PD/88**	Teves	**FI/136-CP**		
DUCATO 100 2.2	06 /	**PD/1099-B**	Brembo			
FIAT DOBLO Cargo 1.8 Flexfuel	10/	**PD/1493-B**				
FIAT DOBLO Veículo multiuso 1.4 ELX Flex	09/	**PD/1493-B**				
DUCATO 100 2.2 D MULTIJET (BOX, BUS, CHASSIS)	04-06 /	**PD/1397-B**				
DUCATO 120 2.3 MULTIJET	06 /	**PD/1099-B**	Brembo			
DUCATO 120 2.3 D MULTIJET (BOX, BUS, CHASSIS)	04-06 /	**PD/1397-B**				
DUCATO 160 3.0 MULTIJET	06 /	**PD/1099-B**	Brembo			
DUCATO 160 3.0 D MULTIJET (BOX, BUS, CHASSIS)	04-06 /	**PD/1397-B**				
DUCATO 2.3 MULTIJET ECONOMY (10 /)	10 /	**PD/498-A**	Bosch	**FI/322-CP**		Aro 15"
DUCATO 2.3 MULTIJET ECONOMY (10 /)	10 /	**PD/652-B**	Bosch	**FI/322-CP**		Aro 16"
DUCATO 2.5 10	97 / 99	**PD/358** **PD/358-A**	Girling	**FI/170-CPA**	Girling	Aro 15"
DUCATO 2.5 10	00 /	**PD/369-B**	Girling	**FI/170-CPA**	Girling	Aro 15"
DUCATO 2.5 8	97 / 99	**PD/358** **PD/358-A**	Girling	**FI/170-CPA**	Girling	Aro 15"
DUCATO 2.5 8	00 /	**PD/369-B**	Girling	**FI/170-CPA**	Girling	Aro 15"
DUCATO 2.8 15 MAXI	97 / 99	**PD/422** **PD/422-A**	Girling	**FI/199-CPA**	Girling	Aro 16"
DUCATO 2.8 15 MAXI	00 /	**PD/438-B**	Girling	**FI/199-CPA**	Girling	Aro 16"
DUCATO 2.8 T 15 MAXI	97 / 99	**PD/422** **PD/422-A**	Girling	**FI/199-CPA**	Girling	Aro 16"
DUCATO 2.8 T 15 MAXI	00 /	**PD/438-B**	Girling	**FI/199-CPA**	Girling	Aro 16"
DUCATO MULTI	10 /	**PD/652-B**				Aro 16"
DUCATO SERIE 10	09-01 / 04	**PD/498-A**	Bosch	**PD/501**	Bosch	Freio de mão **FI/196-CP**
DUCATO SERIE 10	05 /	**PD/498-A**	Bosch	**PD/501**	Bosch	Freio de mão **FI/322-CP**
DUCATO SERIE 11	04-02 / 04	**PD/498-A**	Bosch	**PD/501**	Bosch	Freio de mão **FI/196-CP**

MODEL / *MODELO*	YEAR - *AÑO*	FRONT *DELANTERA*	SYSTEM *SISTEMA*	REAR *TRASERA*	SYSTEM *SISTEMA*	OBS.
FIAT						
DUCATO SERIE 11	05 /	**PD/498-A**	Bosch	**PD/501**	Bosch	Freio de mão **FI/322-CP**
DUCATO SERIE 14	09-01 / 04	**PD/498-A**	Bosch	**PD/501**	Bosch	Freio de mão **FI/196-CP**
DUCATO SERIE 14	05 /	**PD/498-A**	Bosch	**PD/501**	Bosch	Freio de mão **FI/322-CP**
DUCATO SERIE 15	04-02 / 04	**PD/498-A**	Bosch	**PD/501**	Bosch	Freio de mão **FI/196-CP**
DUCATO SERIE 15	05 /	**PD/498-A**	Bosch	**PD/501**	Bosch	Freio de mão **FI/322-CP**
DUCATO SERIE 18 - 2.3 JTD MAXI CARGO	01 / 04	**PD/652-B**	Bosch	**PD/501**	Bosch	Freio de mão **FI/196-CP**
DUCATO SERIE 18 - 2.3 JTD MAXI CARGO	05 /	**PD/652-B**	Bosch	**PD/501**	Bosch	Freio de mão **FI/322-CP**
DUCATO SERIE 18 - 2.8 JTD MAXI CARGO	01 / 04	**PD/652-B**	Bosch	**PD/501**	Bosch	Freio de mão **FI/196-CP**
DUCATO SERIE 18 - 2.8 JTD MAXI CARGO	05 /	**PD/652-B**	Bosch	**PD/501**	Bosch	Freio de mão **FI/322-CP**
DUNA	88 / 92	**PD/26**	Varga	**8017-S/F**		
DUNA	88 / 92	**PD/25-RA**	Teves	**8017-S/F**		
DUNA	93 /	**PD/25-RA**	Teves	**FI/90**	Teves	Brasileros
DUNA	93 /	**PD/25-RA-A**	Teves	**8017-S/F**		2 cables bipolar cortos
DUNA	93 /	**PD/25-RA-B**	Teves	**8017-S/F**		1 cable bipolar corto
DUNA	93 /	**PD/25-RA-FA**	Teves	**8017-S/F**		2 cables bipolar largos
DUNA	93 /	**PD/25-RA-FB**	Teves	**8017-S/F**		1 cables bipolar largos
DUNA	93 /	**PD/25-RA-R**	Teves			2 cables unipolares
ELBA	85 / 97	**PD/25-RA**	Teves	**FI/90**	Teves	Brasileros
ELBA	85 / 97	**PD/26**	Varga	**FI/90**	Teves	Brasileros
ELBA	85 / 97	**PD/25** **PD/25-A** **PD/25-B** **PD/26**	Teves Teves Teves Varga	**FI/90**	Teves	Freio traseiro Ø185,0x30,0mm
FIAT 147	77 / 86	**PD/10** **PD/18**	Bendix Teves	**FI/90**	Teves	Freio traseiro Ø185,0x30,0mm
FIAT-80	79 / 80	**FI/92**		**FI/92**		
FIAT-80	80 / 85		Varga	**FI/93**	Varga	
FIAT-120	80 / 85		Bendix	**FI/95**	Bendix	3° eixo FI/95
FIAT-130	76 / 79	**FI/115**		**FI/115**		
FIAT-140	79	**FI/115**		**FI/115**		
FIAT-140	79 / 85	**FI/117**	Varga	**FI/117**	Varga	3° eixo FI/117
FIAT-180	76 / 79			**4514-F**	Bendix	
FIAT-190	76 / 85	**4524-B**	Master	**4515-C**		
FIAT-210	76 / 78	**4524-B**	Master	**4515-C**		
FIORINO	83 / 86	**PD/310**	Bendix	**8017-S/F**		
FIORINO	93 /	**PD/25-RA**	Teves	**FI/91-S/F** **FI/91-CP** **FI/125-CP** **FI/129-CPA**	Bosch Bendix Bendix	Brasileros
FIORINO	83 / 86	**PD/10**	Bendix	**FI/90**	Teves	
FIORINO	83 / 87	**PD/18**	Teves	**FI/90**	Teves	
FIORINO	87 / 93	**PD/25** **PD/25-A** **PD/25-B** **PD/26**	Teves Teves Teves Varga	**FI/90**	Teves	Freio traseiro Ø185,0x30,0mm
FIORINO 1.4 MPI 8V	14 /	**PD/1482**				
FIORINO 750 kg	92 / 07-10	**PD/47**	Teves	**FI/91-S/F** **FI/91-CP** **FI/125-CP** **FI/129-CPA**	Bosch Bosch Bendix Bendix	
FIORINO 750 kg	08-10 /	**PD/89**	Teves	**FI/91-S/F** **FI/91-CP** **FI/125-CP** **FI/129-CPA**	Bosch Bosch Bendix Bendix	
FIORINO PICK-UP	83 / 86	**PD/10**	Bendix	**FI/90**	Teves	Brasileros
FIORINO PICK-UP	83 / 87	**PD/18**	Teves	**FI/90**	Teves	Brasileros
FIORINO PICK-UP	87 / 93	**PD/25-RA**	Teves	**FI/90**	Teves	Brasileros
FIORINO PICK-UP	87 / 93	**PD/26**	Varga	**FI/90**	Teves	Brasileros
FREEMONT 2.0 16V	13 /	**PD/1408**		**PD/1410**		

MODEL / *MODELO*	YEAR - *AÑO*	FRONT *DELANTERA*	SYSTEM *SISTEMA*	REAR *TRASERA*	SYSTEM *SISTEMA*	OBS.
FIAT						
FREEMONT 2.4 16V	13 /	**PD/1408**		**PD/1410**		
FREEMONT 3.6l V6	13 /	**PD/1408**		**PD/1410**		
FREEMONT EMOTION 2.4 16V	11 /	**PD/1026**	Bosch	**PD/300**	TRW	
FREEMONT PRECISION 2.4 16V	11 /	**PD/1026**	Bosch	**PD/300**	TRW	
GRAND SIENA ATTRACTIVE 1.4 8V	12 /	**PD/1482**	Teves	**FI/219-CPA**		
GRAND SIENA ESSENCE 1.6 16V	12 /	**PD/1482**	Teves	**FI/219-CPA**		
GRAND SIENA ESSENCE DUALOGIC 1.6 16V	12 /	**PD/1482**	Teves	**FI/219-CPA**		
GRAND SIENA TETRAFUEL 1.4 8V	12 /	**PD/1482**	Teves	**FI/219-CPA**		
GRANDE PUNTO	07 / 09			**PD/768**		
GRANDE PUNTO (LATIN AMERICA)	07 /	**PD/509-A**		**PD/1396**		
IDEA 1.4	05 / 06-09	**PD/68**	Teves	**FI/91-S/F** **FI/91-CP**	Bosch	
IDEA 1.4	07-09 /	**PD/88**	Teves	**FI/91-S/F** **FI/91-CP**	Bosch	
IDEA 1.8	05 / 04-09	**PD/68**	Teves	**FI/91-S/F** **FI/91-CP**	Bosch	
IDEA 1.8	05-09 /	**PD/88**	Teves	**FI/91-S/F** **FI/91-CP**	Bosch	
IDEA 1.8 ADVENTURE	05 / 03-10	**PD/78-A**	Teves	**FI/91-S/F** **FI/91-CP**	Bosch	
IDEA 1.8 ADVENTURE	04-10 /	**PD/92**	Teves	**FI/91-S/F** **FI/91-CP**	Bosch	
IDEA	12/			**PD/1416**		
LINEA 1.4 / 1.8	08 /			**PD/1331**	Lucas	
LINEA 1.4 T-JET	09 / 03-10	**PD/66**	Teves			
LINEA 1.4 T-JET	04-10 /	**PD/92**	Teves			
LINEA 1.9	09 / 03-10	**PD/66**	Teves			
LINEA 1.9	04-10 /	**PD/92**	Teves	**PD/1331**	Lucas	**FI/220-CPA**
LINEA ABSOLUTE 1.8 16V DUALOGIC	15 /	**PD/92**	Teves	**PD/1331**	Lucas	
LINEA ESSENCE 1.8 16V	15 /	**PD/92**	Teves	**PD/1331**	Lucas	
MAREA 1.6 16V	05 /	**PD/403-B**	Teves	**FI/91-S/F** **FI/91-CP** **FI/127-CPA**	Bosch Bosch Lockheed	
MAREA 1.8 16V / 1.9 TD	96 /	**PD/403-B**	Teves	**PD/439**	Girling	
MAREA 1.8 SX	99 /	**PD/66-A** **PD/66-B**	Teves	**FI/91-S/F** **FI/91-CP** **FI/127-CPA**	Bosch Lookheed	
MAREA 2.0 20V Turbo	98 /	**PD/484-A**	Girling	**PD/439**	Girling	
MAREA 2.0i 20V / 2.4 TD	96 / 98	**PD/66-A** **PD/66-B**	Teves	**PD/439**	Girling	
MAREA 2.0i 20V / 2.4 TD	98 /	**PD/484-A**	Girling	**PD/439**	Girling	
MAREA CITY 2.0	98 /	**PD/66-A** **PD/66-B**	Teves	**PD/439**	Girling	
MAREA ELX 2.0 20V	98 / 00	**PD/66-A** **PD/66-B**	Teves	**PD/439**	Girling	
MAREA ELX 2.4 20V	00 /	**PD/484-A**	Girling	**PD/439**	Girling	
MAREA HLX 2.0 20V	98 / 00	**PD/66-A** **PD/66-B**	Teves	**PD/439**	Girling	
MAREA HLX 2.4 20V	00 /	**PD/484-A**	Girling	**PD/439**	Girling	
MAREA SX 1.8 16V	99 /	**PD/403-B**	Teves	**FI/91-S/F** **FI/91-CP** **FI/127-CPA**	Bosch Bosch Lockheed	
MAREA SX 2.0 20V	98 / 00	**PD/66-A** **PD/66-B**	Teves	**PD/439**	Girling	
MAREA WEEKEND 1.6 / 1.7 / 1.9 TD SX	96	**PD/403-B**	Teves	**FI/91-S/F** **FI/91-CP** **FI/127-CPA**	Bosch Lookheed	
MAREA WEEKEND CITY 2.0	98 /	**PD/66-A** **PD/66-B**	Teves	**PD/439**	Girling	
MAREA WEEKEND ELX 2.0 20V	98 / 00	**PD/66-A** **PD/66-B**	Teves	**PD/439**	Girling	
MAREA WEEKEND ELX 2.4 20V	00 /	**PD/484-A**	Girling	**PD/439**	Girling	

MODEL / *MODELO*	YEAR - *AÑO*	FRONT *DELANTERA*	SYSTEM *SISTEMA*	REAR *TRASERA*	SYSTEM *SISTEMA*	OBS.
FIAT						
MAREA WEEKEND HLX 2.0 20V	98 / 00	**PD/66-A** **PD/66-B**	Teves	**PD/439**	Girling	
MAREA WEEKEND HLX 2.4 20V	00 /	**PD/484-A**	Girling	**PD/439**	Girling	
MAREA WEEKEND SX 1.8	99 /	**PD/66-A** **PD/66-B**	Teves	**FI/91-S/F** **FI/91-CP** **FI/127-CPA**	Bosch Lookheed	
MAREA WEEKEND SX 1.8	99 /	**PD/403-B**	Teves	**FI/91-S/F** **FI/91-CP** **FI/127-CPA**	Bosch Bosch Lockheed	
MAREA WEEKEND SX 2.0 20V	98 / 00	**PD/66-A** **PD/66-B**	Teves	**PD/439**	Girling	
MILLE	91 /	**PD/25** **PD/26**	Teves Varga	**FI/90**	Teves	Freio traseiro Ø185,0x30,0mm
OGGI	83 / 85	**PD/10** **PD/18**	Bendix Teves	**FI/90**	Teves	
PALIO	04 / 05	**PD/68**				
PALIO 1.0 / 1.5 / 1.6 16V	96 /	**PD/25-RA**	Teves	**FI/97-CP** **FI/97-CPA**	Teves	Brasilero
PALIO 1.0 ED / EDX / EX / ELX	98 /		Teves	**FI/97-CP** **FI/97-CPA**	Teves	
PALIO 1.6 16V	98 / 99	**PD/60**	Teves	**FI/97-CP** **FI/97-CPA**	Teves	
PALIO 1.6 16V	00	**PD/68**	Teves	**FI/97-CP** **FI/97-CPA**	Teves	
PALIO 1.6 16V Sport	97 / 00	**PD/68**	Teves	**FI/97-CP** **FI/97-CPA**	Teves	
PALIO 1.6 EL / 1.6 16V HL	97	**PD/25-RA-P**	Teves	**FI/97-CP** **FI/97-CPA**	Teves	
PALIO 1.6 EL / 1.6 16V HL	98	**PD/47**	Teves	**FI/97-CP** **FI/97-CPA**	Teves	
PALIO 1.6 EL / 1.6 16V HL	99 /	**PD/60** **PD/60-A**	Teves	**FI/97-CP** **FI/97-CPA**	Teves	
PALIO 1.7 TD EL / 1.7 TD HL	97	**PD/25-RA-P**	Teves	**FI/97-CP** **FI/97-CPA**	Teves	
PALIO 1.7 TD EL / 1.7 TD HL	98	**PD/47**	Teves	**FI/97-CP** **FI/97-CPA**	Teves	
PALIO 1.7 TD EL / HL	99 /	**PD/60** **PD/60-A**	Teves	**FI/97-CP** **FI/97-CPA**	Teves	
PALIO 1.8	03 /	**PD/68**	Teves	**FI/97-CP** **FI/97-CPA**	Teves	
PALIO ATTRACTIVE 1.0 EVO	11 /	**PD/85**	Teves			
PALIO ATTRACTIVE 1.4 EVO	11 /	**PD/85**	Teves			
PALIO CITY 1.0	99 / 00	**PD/60**	Teves	**FI/97-CP** **FI/97-CPA**	Teves	
PALIO ED 1.0	96 / 97	**PD/25** **PD/25-A** **PD/25-B**	Teves	**FI/97-CP** **FI/97-CPA**	Teves	
PALIO ED 1.0	98 / 99	**PD/60**	Teves	**FI/97-CP** **FI/97-CPA**	Teves	
PALIO EDX 1.0	96 / 97	**PD/25** **PD/25-A** **PD/25-B**	Teves	**FI/97-CP** **FI/97-CPA**	Teves	
PALIO EDX 1.0	98 / 99	**PD/60**	Teves	**FI/97-CP** **FI/97-CPA**	Teves	
PALIO EL 1.5	96	**PD/25** **PD/25-A** **PD/25-B**	Teves	**FI/97-CP** **FI/97-CPA**	Teves	
PALIO EL 1.5	98 / 99	**PD/60**	Teves	**FI/97-CP** **FI/97-CPA**	Teves	
PALIO EL 1.6	98 / 99	**PD/60**	Teves	**FI/97-CP** **FI/97-CPA**	Teves	
PALIO EL 1.6 16V	96 / 97	**PD/25** **PD/25-A** **PD/25-B**	Teves	**FI/97-CP** **FI/97-CPA**	Teves	
PALIO ELX 1.0	99 / 09-09	**PD/60**	Teves	**FI/97-CP** **FI/97-CPA**	Teves	

MODEL / *MODELO*	YEAR - *AÑO*	FRONT *DELANTERA*	SYSTEM *SISTEMA*	REAR *TRASERA*	SYSTEM *SISTEMA*	OBS.
FIAT						
PALIO ELX 1.0	10-09 /	**PD/90**	Teves	**FI/97-CP** **FI/97-CPA**	Teves	
PALIO ELX 1.4	06 / 09-09	**PD/60**	Teves	**FI/97-CP** **FI/97-CPA**	Teves	
PALIO ELX 1.4	10-09 /	**PD/90**	Teves	**FI/97-CP** **FI/97-CPA**	Teves	
PALIO ELX 1.5	99 / 00	**PD/60**	Teves	**FI/97-CP** **FI/97-CPA**	Teves	
PALIO ELX 1.6	98 / 00	**PD/60**	Teves	**FI/97-CP** **FI/97-CPA**	Teves	
PALIO ELX 1.6 16V	01 / 03	**PD/68**	Teves	**FI/97-CP** **FI/97-CPA**	Teves	
PALIO ELX FIRE 1.3 16V	01 / 03	**PD/60**	Teves	**FI/97-CP** **FI/97-CPA**	Teves	
PALIO ESSENCE 1.6 16V	11 /	**PD/88**	Teves			
PALIO ESSENCE DUALOGIC 1.6 16V	11 /	**PD/88**	Teves			
PALIO EX 1.0	98 / 00	**PD/60**	Teves	**FI/97-CP** **FI/97-CPA**	Teves	
PALIO EX FIRE 1.0 16V	01 / 09-09	**PD/60**	Teves	**FI/97-CP** **FI/97-CPA**	Teves	
PALIO EX FIRE 1.0 16V	10-09 /	**PD/90**	Teves	**FI/97-CP** **FI/97-CPA**	Teves	
PALIO EX FIRE 1.0 8V	01 / 09-09	**PD/60**	Teves	**FI/97-CP** **FI/97-CPA**	Teves	
PALIO EX FIRE 1.0 8V	10-09 /	**PD/90**	Teves	**FI/97-CP** **FI/97-CPA**	Teves	
PALIO EX FIRE 1.3 8V	01 / 09-09	**PD/60**	Teves	**FI/97-CP** **FI/97-CPA**	Teves	
PALIO EX FIRE 1.3 8V	10-09 /	**PD/90**	Teves	**FI/97-CP** **FI/97-CPA**	Teves	
PALIO HLX 1.8	05 /	**PD/68**	Teves	**FI/97-CP** **FI/97-CPA**	Teves	
PALIO SPORTING 1.6 16V	11 /	**PD/88**	Teves			
PALIO SPORTING DUALOGIC 1.6 16V	11 /	**PD/88**	Teves			
PALIO STILE 1.6 16V	01 / 02	**PD/68**	Teves	**FI/97-CP** **FI/97-CPA**	Teves	
PALIO WEEKEND 1.0	99 / 00	**PD/60**	Teves	**FI/91-S/F** **FI/91-CP** **FI/129-CPA**	Bosch Bosch Bendix	
PALIO WEEKEND 1.5	97	**PD/25** **PD/25-A** **PD/25-B**	Teves	**FI/91-S/F** **FI/91-CP** **FI/129-CPA**	Bosch Bosch Bendix	
PALIO WEEKEND 1.5	97 / 00	**PD/68**	Teves	**FI/91-S/F** **FI/91-CP** **FI/129-CPA**	Bosch Bosch Bendix	
PALIO WEEKEND 1.6 / Stile 1.6 16V	97 /	**PD/48-A**	Teves	**FI/91-S/F** **FI/91-CP** **FI/129-CPA**	Bosch Bendix	
PALIO WEEKEND 1.6 16V	98 / 99	**PD/68**	Teves	**FI/91-S/F** **FI/91-CP** **FI/129-CPA**	Bosch Bosch Bendix	
PALIO WEEKEND 1.6 ELX	99 /	**PD/68**	Teves	**FI/91-S/F** **FI/91-CP** **FI/129-CPA**	Bosch Bendix	
PALIO WEEKEND 1.6 16V	11 /	**PD/68**	Teves	**FI/91-S/F** **FI/91-CP** **FI/129-CPA**	Bosch Bosch Bendix	
PALIO WEEKEND 1.7 TD / 1.7 TD Stile	97 /	**PD/48-A**	Teves	**FI/91-S/F** **FI/91-CP** **FI/129-CPA**	Bosch Bendix	
PALIO WEEKEND 1.8	03 /	**PD/68**	Teves	**FI/91-S/F** **FI/91-CP** **FI/127-CPA**	Bosch Bosch Lockheed	
PALIO WEEKEND ADVENTURE 1.6	99 / 03	**PD/68**	Teves	**FI/91-S/F** **FI/91-CP** **FI/127-CPA**	Bosch Bosch Lockheed	

MODEL / *MODELO*	YEAR - *AÑO*	FRONT *DELANTERA*	SYSTEM *SISTEMA*	REAR *TRASERA*	SYSTEM *SISTEMA*	OBS.
FIAT						
PALIO WEEKEND ADVENTURE 1.8	03 /	**PD/68**	Teves	**FI/91-S/F** **FI/91-CP** **FI/127-CPA**	Bosch Bosch Lockheed	
PALIO WEEKEND ADVENTURE LOCKER 1.8	09 / 03-10	**PD/66** **PD/78-A**	Teves	**FI/220-CPA**		
PALIO WEEKEND ADVENTURE LOCKER 1.8	04-10 /	**PD/92**	Teves	**FI/220-CPA**		
PALIO WEEKEND CITY 1.5	99 / 00	**PD/68**	Teves	**FI/91-S/F** **FI/91-CP** **FI/129-CPA**	Bosch Bosch Bendix	
PALIO WEEKEND ELX 1.4	06 / 09-09	**PD/60**	Teves	**FI/91-S/F** **FI/91-CP** **FI/127-CPA**	Bosch Bosch Lockheed	
PALIO WEEKEND ELX 1.4	10-09 /	**PD/90**	Teves	**FI/91-S/F** **FI/91-CP** **FI/127-CPA**	Bosch Bosch Lockheed	
PALIO WEEKEND ELX 1.5	99 / 00	**PD/68**	Teves	**FI/91-S/F** **FI/91-CP** **FI/129-CPA**	Bosch Bosch Bendix	
PALIO WEEKEND ELX 1.6	98 / 00	**PD/60**	Teves	**FI/91-S/F** **FI/91-CP** **FI/129-CPA**	Bosch Bosch Bendix	
PALIO WEEKEND ELX FIRE 1.0 16V	01 / 09-09	**PD/60**	Teves	**FI/91-S/F** **FI/91-CP** **FI/127-CPA**	Bosch Bosch Lockheed	
PALIO WEEKEND ELX FIRE 1.0 16V	10-09 /	**PD/90**	Teves	**FI/91-S/F** **FI/91-CP** **FI/127-CPA**	Bosch Bosch Lockheed	
PALIO WEEKEND ELX FIRE 1.3 16V	00 /	**PD/68**	Teves	**FI/91-S/F** **FI/91-CP** **FI/129-CPA** **FI/127-CPA**	Bosch Bosch Bendix Lockheed	
PALIO WEEKEND EX 1.5	99 / 00	**PD/68**	Teves	**FI/91-S/F** **FI/91-CP** **FI/129-CPA**	Bosch Bosch Bendix	
PALIO WEEKEND HLX 1.8	05 /	**PD/68**	Teves	**FI/91-S/F** **FI/91-CP** **FI/127-CPA**	Bosch Bosch Lockheed	
PALIO WEEKEND SPORT 1.6 16V	98 / 00	**PD/68**	Teves	**FI/91-S/F** **FI/91-CP** **FI/129-CPA**	Bosch Bosch Bendix	
PALIO WEEKEND STILE 1.6 16V	98 / 02	**PD/68**	Teves	**FI/91-S/F** **FI/91-CP** **FI/127-CPA**	Bosch Bosch Lockheed	
PALIO YOUNG 1.0	01	**PD/60**	Teves	**FI/97-CP**	Teves	
PANDA	07 / 11	**PD/1417**				
PANORAMA	80 / 86	**PD/10** **PD/18**	Bendix Teves	**FI/90**	Teves	Freio traseiro Ø185,0x30,0mm
PICAPE	83 / 86	**PD/10**	Bendix	**FI/90**	Teves	Freio traseiro Ø185,0x30,0mm
PICAPE	83 / 87	**PD/18**	Teves	**FI/90**	Teves	Freio traseiro Ø185,0x30,0mm
PICAPE	87 / 93	**PD/25** **PD/25-A** **PD/25-B** **PD/26**	Teves Teves Teves Varga	**FI/90**	Teves	Freio traseiro Ø185,0x30,0mm
PRÊMIO	85 / 95	**PD/25** **PD/25-A** **PD/25-B** **PD/26**	Teves Teves Teves Varga	**FI/90**	Teves	Freio traseiro Ø185,0x30,0mm
PUNTO 1.4	07 / 06-09	**PD/68**	Teves	**FI/219-CPA**		
PUNTO 1.4 ELX	07-09 /	**PD/88**	Teves	**FI/219-CPA**		
PUNTO 1.4 i GT Turbo / 1.8 16 V	93 /	**PD/335-A**	Girling	**PD/430**	Girling	
PUNTO 1.4 T-JET	09 / 03-10	**PD/66**	Teves	**PD/1331**		
PUNTO 1.4 T-JET	04-10 /	**PD/92**	Teves	**PD/1331**		
PUNTO 1.8	07 / 06-09	**PD/68**	Teves	**FI/220-CPA**		
PUNTO 1.8 HLX	07-09 /	**PD/88**	Teves	**FI/220-CPA**		
PUNTO ATTRACTIVE 1.4 8V	12 /	**PD/1482**				

MODEL / *MODELO*	YEAR - *AÑO*	FRONT *DELANTERA*	SYSTEM *SISTEMA*	REAR *TRASERA*	SYSTEM *SISTEMA*	OBS.
FIAT						
PUNTO BLACKMOTION 1.8 16V	14 /	**PD/1482**				
PUNTO ESSENCE DUALOGIC 1.6	11 /	**PD/88**	Teves			
PUNTO ESSENCE 1.6 16V	12 /	**PD/1482**				
PUNTO SPORTING 1.8 16V	12 /	**PD/1482**				
PUNTO SPORTING DUALOGIC 1.8 16V	12 /	**PD/1482**				
QUBO	11 /	**PD/509-A**				
REGATTA 100 / Weekend	86 / 91	**PD/27-A**	Girling	**8017-S/F**		Resorte largo
REGATTA 100 / Weekend	86 / 91	**PD/335-A**	Girling	**8017-S/F**		Resorte corto
REGATTA 85	85 /	**PD/25-RA**	Teves	**8017-S/F**		
REGATTA 85	85 / 92	**PD/301-A**	Bendix	**8017-S/F**		
REGATTA 85/100	93 /	**PD/25-RA-R**	Teves	**8017-S/F**		
REGATTA SCL / SL	93 /	**PD/26-A**	Varga	**8017-S/F**		
SCUDO 1.6 / 1.9 D / 1.9 TD	96 /	**PD/448-A**	Bendix			
SIENA EL 1.6 / HL 1.6 16V	98	**PD/47**	Teves	**FI/97-CP FI/97-CPA**	Teves	
SIENA EL 1.6 / HL 1.6 16V	99 /	**PD/60 PD/60-A**	Teves	**FI/97-CP FI/97-CPA**	Teves	
SIENA 1.0	99 / 00	**PD/60**	Teves	**FI/97-CP FI/97-CPA**	Teves	
SIENA 1.7 TD EL / 1.7 TD HK	97	**PD/25-RA-P**		**FI/97-CP FI/97-CPA**	Teves	
SIENA 1.7 TD EL / 1.7 TD HK	98	**PD/47**	Teves	**FI/97-CP FI/97-CPA**	Teves	
SIENA 1.7 TD EL / HL	99 /	**PD/60 PD/60-A**	Teves	**FI/97-CP FI/97-CPA**	Teves	
SIENA 1.8	03 /	**PD/68**	Teves	**FI/97-CP FI/97-CPA**	Teves	
SIENA 16V	97 /	**PD/48-A**	Teves	**FI/97-CP FI/97-CPA**	Teves	
SIENA CITY	99 / 00	**PD/60**	Teves	**FI/97-CP FI/97-CPA**	Teves	
SIENA EL 1.6	97	**PD/25 PD/25-A PD/25-B**	Teves	**FI/97-CP FI/97-CPA**	Teves	
SIENA EL 1.6	98 / 99	**PD/60**	Teves	**FI/97-CP FI/97-CPA**	Teves	
SIENA EL 1.6 / HL 1.6 16V	97	**PD/25-RA-P**		**FI/97-CP FI/97-CPA**	Teves	
SIENA EL 1.6 16V	97	**PD/25 PD/25-A PD/25-B**	Teves	**FI/97-CP FI/97-CPA**	Teves	
SIENA EL 1.6 16V	98 / 99	**PD/60**	Teves	**FI/97-CP FI/97-CPA**	Teves	
SIENA ELX 1.0	06 / 09-09	**PD/60**	Teves	**FI/97-CP FI/97-CPA**	Teves	
SIENA ELX 1.0	10-09 /	**PD/90**	Teves	**FI/97-CP FI/97-CPA**	Teves	
SIENA ELX 1.0 / CITY	98 /	**PD/60 PD/60-A**	Teves	**FI/97-CP FI/97-CPA**	Teves	
SIENA ELX 1.4	06 / 09-09	**PD/60**	Teves	**FI/97-CP FI/97-CPA**	Teves	
SIENA ELX 1.4	10-09 /	**PD/90**	Teves	**FI/97-CP FI/97-CPA**	Teves	
SIENA ELX 1.5	00	**PD/60**	Teves	**FI/97-CP FI/97-CPA**	Teves	
SIENA ELX 1.6	98 / 00	**PD/60**	Teves	**FI/97-CP FI/97-CPA**	Teves	
SIENA ELX 1.6 16V	01 /	**PD/68**	Teves	**FI/97-CP FI/97-CPA**	Teves	
SIENA ELX FIRE 1.0 16V	01 / 05	**PD/60**	Teves	**FI/97-CP FI/97-CPA**	Teves	
SIENA ELX FIRE 1.3 16V	00 / 05	**PD/60**	Teves	**FI/97-CP FI/97-CPA**	Teves	

MODEL / *MODELO*	YEAR - *AÑO*	FRONT *DELANTERA*	SYSTEM *SISTEMA*	REAR *TRASERA*	SYSTEM *SISTEMA*	OBS.
FIAT						
SIENA EX FIRE 1.0 16V	01 / 05	**PD/60**	Teves	**FI/97-CP** **FI/97-CPA**	Teves	
SIENA HL 1.6 16V	97	**PD/25** **PD/25-A** **PD/25-B**	Teves	**FI/97-CP** **FI/97-CPA**	Teves	
SIENA HL 1.6 16V	98	**PD/60**	Teves	**FI/97-CP** **FI/97-CPA**	Teves	
SIENA HLX 1.8	05 /	**PD/68**	Teves	**FI/97-CP** **FI/97-CPA**	Teves	
SIENA SPORT 1.6 16V	98 / 99	**PD/60**	Teves	**FI/97-CP** **FI/97-CPA**	Teves	
SIENA STILE 1.6 16V	98 / 99	**PD/60**	Teves	**FI/97-CP** **FI/97-CPA**	Teves	
STILO 1.2 16V	02-02 /	**PD/509-B**	Bosch	**PD/518**	Bosch	
STILO 1.4 16V	01-04 /	**PD/509-B**	Bosch	**PD/518**	Bosch	
STILO 1.8 16V	03 /	**PD/511-B**	Bosch	**PD/518**	Bosch	
STILO 1.8 8V	03 /	**PD/509-B**	Bosch	**FI/91-S/F** **FI/91-CP**	Bosch	
STILO 1.8 8V	06-10 /	**PD/1482-B**				
STILO 1.8 8V	07 / 05-10	**PD/68-B**	Teves			
STILO 1.9 JTD	10-01 /	**PD/511-B**	Bosch	**PD/518**	Bosch	
STILO 2.4 20V	03 /			**PD/518**	Bosch	
STILO 2.4 20V ABARTH	10-01 /	**PD/673-B**	Bosch			
STILO ATTRACTIVE DUALOGIC 1.8	07 / 05-10	**PD/68-B**	Teves			
STILO ATTRACTIVE 1.8 8V	06-10 /	**PD/1482-B**				
STILO ATTRACTIVE DUALOGIC 1.8 8V	06-10 /	**PD/1482-B**				
STILO BLACKMOTION 1.8 8V	06-10 /	**PD/1482-B**				
STILO BLACKMOTION 1.8 8V	07 / 05-10	**PD/68-B**	Teves			
STILO SPORTING DUALOGIC 1.8 8V	08 /	**PD/1482-B**				
STILO SPORTING 1.8 8V	07 /	**PD/68-B**	Teves			
STRADA	98 / 06-09	**PD/68**	Teves	**FI/91-S/F** **FI/91-CP**	Bosch	
STRADA	07-09 /	**PD/88**	Teves	**FI/91-S/F** **FI/91-CP**	Bosch	
STRADA 1.4	07-09 /	**PD/88**	Teves	**FI/91-S/F** **FI/91-CP**	Bosch	
STRADA 1.6 / 1.8 16V	99 /	**PD/68**	Teves			
STRADA 1.8	07-09 /	**PD/88**	Teves	**FI/91-S/F** **FI/91-CP**	Bosch	
STRADA ADVENTURE LOCKER	04-10 /	**PD/92**	Teves	**FI/136-CP**		
STRADA ADVENTURE 1.8 CE	14 /	**PD/1482**				
STRADA ADVENTURE 1.8 CD	14 /	**PD/1482**				
STRADA LOCKER	09 /	**PD/78-A**	Teves	**FI/136-CP**		
STRADA TREKKING 1.6 CD	14 /	**PD/88**	Teves			
STRADA WORKING 1.4 CC	14 /	**PD/88**	Teves			
STRADA WORKING 1.4 CE	14 /	**PD/88**	Teves			
STRADA WORKING 1.4 CD	14 /	**PD/88**	Teves			
TEMPRA 16V	93 / 94	**PD/47-A**	Teves	**PD/49**	Varga	
TEMPRA 16V	95 /	**PD/48** **PD/48-A**	Teves	**PD/49**	Varga	
TEMPRA 8V	92 / 94	**PD/47-A**	Teves	**FI/91-S/F** **FI/91-CP** **FI/125-CP** **FI/129-CPA**	Bosch Bosch Bendix Bendix	
TEMPRA 8V	95 /	**PD/48** **PD/48-A**	Teves	**FI/91-S/F** **FI/91-CP** **FI/125-CP** **FI/129-CPA**	Bosch Bosch Bendix Bendix	
TEMPRA SW	95 / 97	**PD/47-A**	Teves	**PD/430**	Girling	
TEMPRA Turbo	94 /	**PD/48** **PD/48-A**	Teves	**PD/49**	Varga	

MODEL / *MODELO*	YEAR - *AÑO*	FRONT *DELANTERA*	SYSTEM *SISTEMA*	REAR *TRASERA*	SYSTEM *SISTEMA*	OBS.
FIAT						
TIPO 1.6	93 / 97	**PD/27-A** **PD/47**	Girling Teves	**FI/96-S/F** **FI/96-CPA** **FI/135-CP**	Girling Girling Bendix	
TIPO 1.6 / 1.8	93 / 97	**PD/335-A**	Girling	**8124-S**		Resorte corto
TIPO 2.0 16V	94 / 98	**PD/48** **PD/48-A**	Teves	**PD/430**	Girling	
TIPO 2.0 8V	92 / 94	**PD/27-A**	Girling	**PD/430**	Girling	Resorte largo
TIPO 2.0 8V	92 / 94	**PD/335-A**	Girling	**PD/430**	Girling	Resorte corto
TIPO 2.0 8V	94 / 97	**PD/47-A**	Teves	**PD/49**	Varga	
TORO 1.8 Flex	16/	**PD/1512**				
TORO 2.0 D	16/	**PD/1512**				
UNO	84 / 96	**PD/25-RA**	Teves	**FI/90**	Teves	Brasilero
UNO	84 / 96	**PD/25** **PD/25-A** **PD/25-B** **PD/26**	Teves Teves Teves Varga	**FI/90**	Teves	
UNO	93 /	**PD/25-RA**	Teves	**FI/90**	Teves	Brasilero
UNO	93 /	**PD/25-RA-A**	Teves	**8017-S/F**		1 cables bipolar cortos
UNO	93 /	**PD/25-RA-B**	Teves	**8017-S/F**		2 cables bipolar largos
UNO	95 /	**PD/25-RA-FA**	Teves	**8017-S/F**		1 cable bipolar largo
UNO	88 / 92	**PD/26**	Varga	**8017-S/F**		
UNO	90 /	**PD/25-RA**	Teves	**8017-S/F**		2 cables bipolar cortos
UNO 1.0 WAY	08 / 07-10	**PD/47**	Teves	**FI/97-CP** **FI/97-CPA**	Teves	
UNO 1.0 WAY	08-10 /	**PD/89**	Teves	**FI/97-CP** **FI/97-CPA**	Teves	
UNO 1.5 R	87 / 90	**PD/27-A**	Girling	**FI/90**	Teves	Importado
UNO 1.6 R	90 / 94	**PD/27-A**	Girling	**FI/90**	Teves	Importado
UNO ATTRACTIVE 1.4 EVO 4P	10 /	**PD/85**	Teves	**FI/219-CPA**	TRW	C/ABS
UNO ATTRACTIVE 1.4 EVO 4P	10 /	**PD/85**	Teves	**FI/97-CP** **FI/97-CPA**	Bendix	S/ABS
UNO MILLE	91 /	**PD/25-RA**	Teves	**FI/90**	Teves	Brasilero
UNO MILLE	91 /	**PD/26**	Varga	**FI/90**	Teves	Brasilero
UNO MILLE 1.0 EX	97 / 01	**PD/25** **PD/25-A** **PD/25-B** **PD/26**	Teves Teves Teves Varga	**FI/90**	Teves	
UNO MILLE 1.0 FIRE	01 /	**PD/25** **PD/25-A** **PD/25-B** **PD/26**	Teves Teves Teves Varga	**FI/90**	Teves	
UNO MILLE 1.0 FIRE	09 / 09-09	**PD/25**	Teves	**FI/97-CP** **FI/97-CPA**	Teves	
UNO MILLE 1.0 FIRE	10-09 /	**PD/87**	Teves	**FI/97-CP** **FI/97-CPA**	Teves	
UNO MILLE 1.0 SMART	01 / 04	**PD/25** **PD/25-A** **PD/25-B** **PD/26**	Teves Teves Teves Varga	**FI/90**	Teves	
UNO MILLE 1.0 SX	96 / 99	**PD/25** **PD/25-A** **PD/25-B** **PD/26**	Teves Teves Teves Varga	**FI/90**	Teves	
UNO Turbo	92 / 96	**PD/48** **PD/48-A**	Teves	**FI/91-S/F**	Bosch	
UNO Turbo	90 / 94			**PD/430**	Girling	Italiano
UNO VIVACE 1.0 EVO 4P	10 /	**PD/85**	Teves	**FI/219-CPA**	TRW	C/ABS
UNO VIVACE 1.0 EVO 4P	10 /	**PD/85**	Teves	**FI/97-CP** **FI/97-CPA**	Bendix	S/ABS
UNO WAY 1.0 EVO 4P	10 /	**PD/85**	Teves	**FI/219-CPA**	TRW	C/ABS
UNO WAY 1.0 EVO 4P	10 /	**PD/85**	Teves	**FI/97-CP** **FI/97-CPA**	Bendix	S/ABS
UNO WAY 1.4 EVO 4P	10 /	**PD/85**	Teves	**FI/219-CPA**	TRW	C/ABS

MODEL / *MODELO*	YEAR - *AÑO*	FRONT *DELANTERA*	SYSTEM *SISTEMA*	REAR *TRASERA*	SYSTEM *SISTEMA*	OBS.
FIAT						
UNO WAY 1.4 EVO 4P	10 /	**PD/85**	Teves	**FI/97-CP** **FI/97-CPA**	Bendix	S/ABS
FNM (Alfa Romeo)						
D-11.000	58 / 70	**FN/106**		**FN/107**		
FNM-180	73 / 74	**FN/106**		**FN/107**		
FNM-180	75 / 77			**4514-F**	Bendix	
FNM-190	76 / 77	**4524-B**	Master	**4515-C**		
FNM-210	73 / 77	**4524-B**	Master	**4515-C**		
V-15	71 / 77	**FN/106**		**FN/107**		
FODEN						
2000 Series: 2200	90 /	**19613/614 00**		**19613/614 00**		
3000 Series: 3049 / 3053 / 3063 / 3250 / 3300	88 /	**19613/614 00**		**19613/614 00**		
4000 Series: 4250 / 4300 / 4350 / 4400 / 4500	87 /	**19613/614 00**		**19613/614 00**		
4000 Series: 4250 / 4300 / 4350 / 4400 / 4500	82 / 87	**19896 00**		**19896 00**		
S 104 / S 106 / S 108 (HAULMASTER)	82 / 87	**19896 00**		**19896 00**		
HAULMASTER w/Stopmaster brakes	77 / 83	**19384/385 00**		**19384/385 00**		
FORD						
1093	64 / 68	**8049**		**8049**		
1618-CO	93 /	**FD/87**	Master	**FD/88**	Master	
AEROSTAR	91 /	**PD/513**				
AEROSTAR	86 / 87	**PD/605**				
AEROSTAR	91 / 95	**PD/374**				
AEROSTAR	92 / 95	**PD/513**				
AEROSTAR USA	86 / 91	**PD/374**				
AERO-WILLYS	60 / 61	**1219**		**1219**		
AERO-WILLYS	62 / 71	**2006-T**	Bendix	**2006-T**	Bendix	
B-1618-CO	93 / 97	**FD/87**	Master	**FD/88**	Master	Ônibus
B-1621	98 /	**FD/88**	Master	**4710**	Master	Ônibus
B600	84 / 89	**PD/653**				
B600	67 /	**2060**		**4564-A**		
B700	84 / 89	**PD/653**				
B7000	84 / 87	**PD/653**				
BELINA	69 / 77	**PD/10**	Bendix	**8049**		
BELINA 4x4	85 / 87	**PD/10** **PD/18**	Bendix Teves	**CB/42**		
BELINA II	77 / 89	**PD/10**	Bendix	**FD/65** **FD/66**	Bendix Varga	
BELINA II	80 / 89	**PD/18**	Teves	**FD/65** **FD/66**	Bendix Varga	
BRONCO 4X4 USA	76 / 86	**PD/19-C**				
BRONCO 4X4 USA	87 / 93	**PD/523**				
BRONCO 4X4 USA	94 / 96	**PD/356**				
BRONCO II	86 / 87	**PD/605**				
BRONCO II 4X4 USA	83 / 90	**PD/513**				
BRONCO II 4X4 USA	84 / 90	**PD/374**				
BRONCO II 4X4 USA	90 /	**PD/513**				
C-700	84 / 86	**PD/653**				
C-712-E	07 /	**FD/58**	Master	**FD/58**	Master	Freio HD
C-800	84 / 87	**PD/653**				
C-814	96 /	**FD/77**	Master	**FD/77**	Master	
C-815	01 /	**FD/77**	Master	**FD/77**	Master	
C-815 E	04 /	**FD/58**	Master	**FD/58**	Master	Freio HD

MODEL / *MODELO*	YEAR - *AÑO*	FRONT *DELANTERA*	SYSTEM *SISTEMA*	REAR *TRASERA*	SYSTEM *SISTEMA*	OBS.
FORD						
C-816	14 /	**FD/58**	Master	**FD/58**	Master	
C-914	99 /	**FD/77**	Master	**FD/77**	Master	
C-915	01 /	**FD/77**	Master	**FD/77**	Master	
C-1113	85 / 86			**4505-A**		
C-1114	85 / 86			**4505-A**		
C-1117	85 / 86			**4505-A**		
C-1119	13 /	**FD/59**	Master	**FD/59**	Master	
C-1215	86 / 91	**FD/83**	Bendix	**4515-G**	Bendix	
C-1215	92 / 96	**FD/83**	Bendix	**FD/85**	Bendix	
C-1215	97 /	**FD/86**	Master	**FD/87**	Master	
C-1217	01 /	**FD/86**	Master	**FD/87**	Master	
C-1218	87 / 91	**FD/83**	Bendix	**4515-G**	Bendix	
C-1313	85 / 87	**FD/83**	Bendix	**4515-G**	Bendix	
C-1314	85 / 86	**FD/83**	Bendix	**4515-G**	Bendix	
C-1316	02 /	**FD/86**	Master	**FD/87**	Master	
C-1317	85 / 86	**FD/83**	Bendix	**4515-G**	Bendix	
C-1317	01 /	**FD/86**	Master	**FD/87**	Master	
C-1319	10 /	**FD/87**	Master	**FD/87**	Master	
C-1415	86 / 91	**FD/83**	Bendix	**4515-G**	Bendix	
C-1415	92 / 96	**FD/83**	Bendix	**FD/84**	Bendix	
C-1415	97 /	**FD/86**	Master	**FD/88**	Master	3° eixo FD/88
C-1416	00 /	**FD/83**	Bendix	**FD/84**	Bendix	
C-1416	98 /	**FD/86**	Master	**FD/88**	Master	3° eixo FD/88
C-1417	01 /	**FD/86**	Master	**FD/88**	Master	
C-1418	86 / 90	**FD/83**	Bendix	**4515-G**	Bendix	
C-1419	90 / 91	**FD/83**	Bendix	**4515-G**	Bendix	
C-1421	01 /	**FD/86**	Master	**FD/88**	Master	
C-1422	92 / 96	**FD/83**	Bendix	**FD/84**	Bendix	
C-1422	97 /	**FD/86**	Master	**FD/88**	Master	3° eixo FD/88
C-1514	85 / 86	**FD/83**	Bendix	**4515-G**	Bendix	
C-1516	02 /	**FD/87**	Master	**FD/88**	Master	
C-1517	85 / 86	**FD/83**	Bendix	**4515-G**	Bendix	
C-1517	12-02 /	**FD/87**	Master	**FD/88**	Master	3° eixo FD/88
C-1519	10 /	**FD/88**	Master	**FD/88**	Master	
C-1521	12-02 /	**FD/87**	Master	**FD/88**	Master	3° eixo FD/88
C-1615	86 / 90	**FD/83**	Bendix	**4515-G**	Bendix	
C-1617	92 / 96	**FD/85**	Bendix	**FD/84**	Bendix	
C-1617	97 /	**FD/87**	Master	**FD/88**	Master	3° eixo FD/88
C-1617	97 /	**FD/87**	Master	**FD/84**	Master	3° eixo 4715
C-1618	86 / 90	**FD/83**	Bendix	**4515-G**	Bendix	
C-1618	91 / 96	**FD/85**	Bendix	**FD/84**	Bendix	
C-1618	97 /	**FD/87**	Master	**FD/88**	Master	3° eixo FD/88
C-1618	97 /	**FD/87**	Master	**FD/84**	Master	3° eixo 4715
C-1619	90 / 97	**FD/83**	Bendix	**4515-G**	Bendix	
C-1619	91 / 96	**FD/85**	Bendix	**FD/84**	Bendix	
C-1621	97 /	**FD/87**	Master	**FD/88**	Master	3° eixo FD/88
C-1622	92 / 96	**FD/85**	Bendix	**FD/84**	Bendix	
C-1622	97 /	**FD/87**	Master	**FD/88**	Master	3° eixo FD/88
C-1622	97 /	**FD/87**	Master	**FD/84**	Master	3° eixo 4715
C-1622 GARBAGE	02 /	**FD/88**	Master	**4710**	Master	Lixo
C-1630	97 /	**FD/87**	Master	**FD/88**	Master	
C-1716	00 /	**FD/87**	Master	**FD/88**	Master	
C-1717	01 /	**FD/87**	Master	**FD/88**	Master	3° eixo FD/88
C-1719	10 /	**FD/88**	Master	**FD/88**	Master	

MODEL / *MODELO*	YEAR - *AÑO*	FRONT *DELANTERA*	SYSTEM *SISTEMA*	REAR *TRASERA*	SYSTEM *SISTEMA*	OBS.
FORD						
C-1721	01 /	**FD/87**	Master	**FD/88**	Master	3° eixo FD/88
C-1722	97 /	**FD/87**	Master	**FD/88**	Master	3° eixo FD/88
C-1722	97 /	**FD/87**	Master	**FD/84**	Master	3° eixo 4715
C-1722 GARBAGE	03-02 /	**FD/88**	Master	**4710**	Master	Lixo
C-1723	10 /	**FD/88**	Master	**FD/88**	Master	
C-1729 RIGIDO	10 /	**FD/88**	Master	**FD/88**	Master	
C-1730	00 /	**FD/87**	Master	**FD/88**	Master	
C-1731	03 /	**FD/87**	Master	**FD/88**	Master	
C-1933	10 /	**FD/88**	Master	**FD/88**	Master	
C-1933 TRACTOR	10 /	**FD/88**	Master	**FD/88**	Master	
C-2217	86 / 90	**FD/83**	Bendix	**4515-G**	Bendix	3° eixo 4515-G
C-2218	87 / 90	**FD/83**	Bendix	**4515-G**	Bendix	3° eixo 4515-G
C-2218-T	88 / 90	**FD/83**	Bendix	**4515-G**	Bendix	3° eixo 4515-G
C-2219	91 / 96	**FD/85**	Bendix	**FD/84**	Bendix	3° eixo FD/84
C-2219	90 /	**FD/83**	Bendix	**4515-G**	Bendix	3° eixo 4515-G
C-2219-T	90 /	**FD/83**	Bendix	**4515-G**	Bendix	3° eixo 4515-G
C-2224	92 / 96	**FD/85**	Bendix	**FD/84**	Bendix	
C-2319 6x2	91 / 96	**FD/85**	Bendix	**FD/84**	Bendix	3° eixo FD/84
C-2319-T 6x2	91 / 96	**FD/85**	Bendix	**FD/84**	Bendix	3° eixo FD/84
C-2322	92 / 96	**FD/85**	Bendix	**FD/84**	Bendix	
C-2322 6x2	92 / 96	**FD/85**	Bendix	**FD/84**	Bendix	3° eixo FD/84
C-2324	90 / 96	**FD/83**	Bendix	**4515-G**	Bendix	3° eixo 4515-G
C-2324 6x4	91 / 97	**FD/85**	Bendix	**FD/84**	Bendix	3° eixo FD/84
C-2421 6x2	10-03 /	**FD/87**	Master	**FD/88**	Master	3° eixo FD/88
C-2422	89 / 91	**FD/83**	Bendix	**4515-G**	Bendix	3° eixo 4515-G
C-2422	92 / 96	**FD/85**	Bendix	**FD/84**	Bendix	
C-2422	95 / 02	**FD/87**	Master	**FD/88**	Master	
C-2422 6x2	10-03 /	**FD/87**	Master	**FD/88**	Master	3° eixo FD/88
C-2422 6x4	92 / 95	**FD/85**	Bendix	**FD/84**	Bendix	3° eixo FD/84
C-2422 6x4	96 / 02	**FD/87**	Master	**FD/88**	Master	
C-2423	10 /	**FD/88**	Master	**FD/88**	Master	
C-2425	95 / 02	**FD/87**	Master	**FD/88**	Master	3° eixo FD/88
C-2428	06 /	**FD/88**	Master	**FD/88**	Master	
C-2429 (6x2)	10 /	**FD/88**	Master	**FD/88**	Master	
C-2622	02 /	**FD/88**	Master	**FD/88**	Master	
C-2623 (6x4)	10 /	**FD/88**	Master	**FD/88**	Master	
C-2625	00 /	**FD/87**	Master	**FD/88**	Master	
C-2626	02 /	**FD/88**	Master	**FD/88**	Master	
C-2628	02 /	**FD/88**	Master	**FD/88**	Master	
C-2629 (6x4)	10 /	**FD/88**	Master	**FD/88**	Master	
C-2630	98 / 04-02	**FD/87**	Master	**FD/88**	Master	3° eixo FD/88
C-2630	05-02 /	**FD/88**	Master	**FD/88**	Master	
C-2630	98 /	**FD/87**	Master	**FD/84**	Master	3° eixo 4715
C-2631	02 /	**FD/88**	Master	**FD/88**	Master	
C-2831	11-04 /	**FD/88**	Master	**FD/88**	Master	3° eixo FD/88
C-2932	02 /	**FD/88**	Master	**FD/88**	Master	3° eixo FD/88
C-3133 (6x4)	10 /	**FD/88**	Master	**FD/88**	Master	
C-3222	01 /	**FD/87**	Master	**FD/88**	Master	
C-3224	90 / 97	**FD/83**	Bendix	**4515-G**	Bendix	
C-3224	91 / 96	**FD/85**	Bendix	**FD/84**	Bendix	
C-3224	97 /	**FD/87**	Master	**FD/88**	Master	
C-3530	92 / 97	**FD/85**	Bendix	**FD/84**	Bendix	
C-4030	95 / 96	**FD/85**	Bendix	**FD/84**	Bendix	
C-4030	97 /	**FD/87**	Master	**FD/88**	Master	

MODEL / *MODELO*	YEAR - *AÑO*	FRONT *DELANTERA*	SYSTEM *SISTEMA*	REAR *TRASERA*	SYSTEM *SISTEMA*	OBS.
FORD						
C-4031	01 /	**FD/87**	Master	**FD/88**	Master	
C-4331	01 /	**FD/87**	Master	**FD/88**	Master	
C-4331 MaxTon	03 /	**FD/87**	Master	**FD/88**	Master	
C-4331 S	10-04 /	**FD/87**	Master	**FD/88**	Master	
C-4432E TRACTOR	05 /	**FD/88**	Master	**FD/88**	Master	
C-5032	06 /	**FD/88**	Master	**FD/88**	Master	
C-6332 E	11-07 /	**FD/88**	Master	**FD/88**	Master	3° eixo FD/88
C-7000	84 / 86	**PD/653**				
C-8000	84	**PD/653**				
CARGO 1117 C	03-81 /	**19072 00**		**19351 00**		
CARGO 1117 C	03-81 /	**19072 00**		**17316 00**		
CARGO 1311 / 1312 / 1314 / 1317	03-81 / 86	**19072 00**		**17316 00**		
CARGO 1411 / 1413 / 1415 / 1417 / 1418	03-81 /	**19111 00**		**17316 00**		
CARGO 1512 / 1513 / 1514 /	03-81 /	**19111 00**		**17316 00**		
CARGO 1519	13 /	**FD/88**		**FD/88**		
CARGO 1614 / 1617 / 1620	03-81 / 87	**19111 00**		**19351 00**		
CARGO 1620 / 1624	87 /	**19887 00**				
CARGO 1713 / 1714 / 1717	81 / 86	**PD/154**	Meritor			
CARGO 1713 / 1714 / 1717	87 /	**PD/140-A**	Meritor			
CARGO 1713 / 1714 / 1717 / 1720 / 1724 /1728	87 /			**19887 00**		
CARGO 1720 / 1724 / 1728	81 / 86	**PD/154**	Meritor			
CARGO 1720 / 1724 / 1728	87 /	**PD/140-A**	Meritor			
CARGO 1824 / 1924	84 / 86	**19921 00**		**19921 00**		
CARGO 2014 / 2114	03-81 / 86	**19072 00**		**19351 00**		
CARGO 2042 6X2 420CV	13 /	**4707**	Master	**CA/33**	Master	
CARGO 2118C / 2921C	89 /	**19887 00**		**19887 00**		
CARGO 2417 / 2517 / 2817 (ALL C & P SERIES)	03-81 / 86	**19111 00**		**19351 00**		
CARGO 2417 / 2517 / 2817 (ALL C & P SERIES)	03-81 / 86	**19887 00**				ROR Stopmaster Brakes
CARGO 2424C	87 /	**19887 00**		**19887 00**		Also 2nd rear axle
CARGO 2429	13 /	**FD/88**		**FD/88**		
CARGO 2517C / 2521C / 2817C / 2820 D / P / 3224C	87 /	**19887 00**		**19887 00**		
CARGO 2517P / 2817P / 2824	87 / 89	**19887 00**		**19887 00**		
CARGO 2824 / 3220	84 / 86	**19921 00**		**19921 00**		Also 2nd rear axle
CARGO 2842 6X2 420CV	13 /	**4707**	Master	**CA/33**	Master	
CARGO 3224 / 3424	84 /	**19887 00**		**19887 00**		
CARGO 3224 / 3424	84 /	**19921 00**		**19921 00**		
CARGO 3824 / 3828 / 3828C	84 /	**19921 00**		**19921 00**		Also 2nd rear axle
CARGO O 608 / O 609 / O 611	81 / 86	**PD/154**	Meritor	**PD/154**	Meritor	
CARGO O 608 / O 609 / O 611	03-87 /	**PD/140-A**	Meritor	**PD/140-A**	Meritor	
CARGO O 708 / O 709 / O 711 / O 712 / O 713	81 / 86	**PD/154**	Meritor	**PD/154**	Meritor	
CARGO O 708 / O 709 / O 711 / O 712 / O 713	03-87 /	**PD/140-A**	Meritor	**PD/140-A**	Meritor	
CARGO O 808 / O 809 / O 811 / O 812 / O 815	81 / 86	**PD/154**	Meritor	**PD/154**	Meritor	
CARGO O 808 / O 809 / O 811 / O 812 / O 815	03-87 /	**PD/140-A**	Meritor	**PD/140-A**	Meritor	
CARGO O 813 (WITH DISC BRAKE)	81 / 86	**PD/154**	Meritor	**PD/154**	Meritor	
CARGO O 813 (WITH DISC BRAKE)	87 /	**PD/140-A**	Meritor	**PD/140-A**	Meritor	
CF-7000	95 / 97	**PD/653**				
CF-8000	95 / 97	**PD/653**				
CONTOUR	96 / 00	**PD/352**		**PD/402-A**		
CONTOUR 2.0 / 2.5	94 /	**PD/352-A**	Teves	**PD/402-A**	Bendix	
CONTOUR SVT	99 / 00			**PD/402-A**		
CORCEL	69 / 77	**PD/10**	Bendix	**8049**		
CORCEL II	77 / 86	**PD/10**	Bendix	**FD/65** **FD/66**	Bendix Varga	
CORCEL II	80 / 86	**PD/18**	Teves	**FD/65** **FD/66**	Bendix Varga	

MODEL / *MODELO*	YEAR - *AÑO*	FRONT *DELANTERA*	SYSTEM *SISTEMA*	REAR *TRASERA*	SYSTEM *SISTEMA*	OBS.
FORD						
COUGAR	90 / 92	**PD/1033**				
COUGAR	93 / 97	**PD/694**				
COUGAR USA	99 / 00	**PD/352**				
COUGAR XR-7	90 / 92	**PD/1033**				
COUGAR XR-8	93 / 94	**PD/694**				
COUGAR XR-9	96 / 97	**PD/678**				
COURIER	01 /	**PD/34**				
COURIER (MEXICANO)		**PD/1378**				
COURIER 1.3	97	**PD/34**	Teves	**VW/273** **FD/130-CPA**		
COURIER 1.3	97 / 99	**PD/65**	Teves	**FD/130-CPA**		
COURIER 1.3 / 1.3 i / 1.4 16V	97 / 99	**PD/65**	Teves	**VW/273** **FD/130-CPA**		
COURIER 1.3 / 1.3 i / 1.4 16V	97 / 99	**PD/55**		**VW/273** **FD/130-CPA**		
COURIER 1.6	97	**PD/34**	Teves	**VW/273** **FD/130-CPA**		
COURIER 1.6	03-09 /	**PD/79**	Teves	**FD/130-CPA**		
COURIER 1.6 / 1.6 16V	99 /	**PD/55**		**VW/273** **FD/130-CPA**		
COURIER 1.6 / 1.6 16V	99 / 02-09	**PD/65**	Teves	**VW/273** **FD/130-CPA**		
COURIER 1.8 D	97 /	**PD/65**	Teves	**VW/273** **FD/130-CPA**		
COURIER 1.8 D	97 /	**PD/55**		**VW/273** **FD/130-CPA**		
CROWN VICTORIA	96 /					Freio de mão **FP/99-CP**
CROWN VICTORIA	73 / 78	**PD/19-C**				
CROWN VICTORIA	98 / 02	**PD/618**		**PD/704**		
CROWN VICTORIA	03 / 05	**PD/348**		**PD/349**		
CROWN VICTORIA	03 / 04			**PD/1018**		
CROWN VICTORIA	05 / 10	**PD/348**		**PD/1018**		
CROWN VICTORIA LIMO	07	**PD/348**		**PD/1018**		
CROWN VICTORIA POLICE	05 / 10	**PD/348**		**PD/1018**		
DAUPHINE	64 / 68	**8049**		**8049**		
DEL REY	81 / 83	**PD/10** **PD/18**	Bendix Teves	**FD/65** **FD/66**	Bendix Varga	
DEL REY	84 / 91	**PD/22** **PD/22-B**	Varga	**FD/65** **FD/66**	Bendix Varga	
ECONOLINE E-150	95 / 03	**PD/356**				
ECONOLINE E-151	04 / 07			**PD/1066**		
ECONOLINE E-152	08 / 10	**PD/1086**		**PD/1087**		
ECONOLINE E-153 USA	75 / 86	**PD/19-C**				
ECONOLINE E-154 USA	87 / 93	**PD/523**				
ECONOLINE E-155 USA	94 /	**PD/356**				
ECONOLINE E-250	97 / 98	**PD/559**				
ECONOLINE E-250	99 /	**PD/559**		**PD/622**		
ECONOLINE E-250	81 / 91	**PD/539**				
ECONOLINE E-250	92 / 94	**PD/524**				
ECONOLINE E-350	97 / 98	**PD/559**				
ECONOLINE E-351	99 / 07	**PD/559**		**PD/622**		
ECONOLINE E-352	08 / 10	**PD/1086**		**PD/1087**		
ECOSPORT	04 / 08	**PD/497**				
ECOSPORT	09 / 10	**PD/80**				
ECOSPORT 1.0 SUPERCHARGER	03 / 02-09	**PD/497**	Teves	**FD/98-CP**	Teves	
ECOSPORT 1.0 SUPERCHARGER	03-09 /	**PD/80**	Teves	**FD/98-CP**	Teves	
ECOSPORT 1.4 D	03 / 02-09	**PD/497**	Teves	**FD/98-CP**	Teves	
ECOSPORT 1.4 D	03-09 /	**PD/80**	Teves	**FD/98-CP**	Teves	

MODEL / *MODELO*	YEAR - *AÑO*	FRONT *DELANTERA*	SYSTEM *SISTEMA*	REAR *TRASERA*	SYSTEM *SISTEMA*	OBS.
FORD						
ECOSPORT 1.6	03 / 02-09	**PD/497**	Teves	**FD/98-CP**	Teves	
ECOSPORT 1.6	03-09 /	**PD/80**	Teves	**FD/98-CP**	Teves	
ECOSPORT 1.6 L SIGMA	13 /	**PD/767**	Teves			
ECOSPORT 2.0	03 / 02-09	**PD/497**	Teves	**FD/98-CP**	Teves	
ECOSPORT 2.0	03-09 /	**PD/80**	Teves	**FD/98-CP**	Teves	
ECOSPORT AUTOMATICA	09 /	**PD/767**	Teves			
ECOSPORT AUTOMATICA 2.0	05 / 08-09	**PD/1103**	Teves			
ECOSPORT 2.0 L 4WD 16V	13 /	**PD/767**	Teves			
ECOSPORT 2.0 L DURATEC	13 /	**PD/767**	Teves			
EDGE 3.5L	07 / 09	**PD/1080**		**PD/1081**		
EDGE 3.5L V6	08 /	**PD/1080**	ADVICS	**PD/1081**	Akebono	
ESCAPE	01 /	**PD/530**	Teves			
ESCAPE	02 / 07	**PD/530**				
ESCAPE	08 / 09	**PD/803**		**PD/804**		
ESCAPE 2.0L	13 /	**PD/1427**				
ESCAPE 4WD	05 / 09	**PD/803**		**PD/804**		
ESCORT	97 /	**PD/54**	Varga	**FD/63-S/F FD/126-CPA**	Varga	
ESCORT	93 /	**PD/35**	Bendix	**CB/49**	Varga	
ESCORT	83 / 90	**PD/542**				
ESCORT 1.9L	94 / 96	**PD/376**				
ESCORT 1.9L	94 / 96	**PD/132**				
ESCORT (U.S.A)	93 / 94	**PD/376**	Sumitomo			
ESCORT 1.4	93 / 96	**PD/34**	Teves	**FD/63-S/F FD/126-CPA**	Varga	
ESCORT 1.6	83 / 92	**PD/24 PD/24-A PD/24-B**	Teves	**FD/64-S/F FD/64-CPA**	Varga	
ESCORT 1.6	93 / 96	**PD/34**	Teves	**FD/63-S/F FD/126-CPA**	Varga	
ESCORT 1.6	94 / 96	**PD/35**	Bendix	**FD/63-S/F FD/126-CPA**	Varga	
ESCORT 1.8	84 / 92	**PD/24 PD/24-A PD/24-B**	Teves	**FD/64-S/F FD/64-CPA**	Varga	
ESCORT 1.8	93 / 96	**PD/34**	Teves	**FD/63-S/F FD/126-CPA**	Varga	
ESCORT 1.8	94 / 96	**PD/35**	Bendix	**FD/63-S/F FD/126-CPA**	Varga	
ESCORT 1.8 16V	97 /	**PD/35**	Bendix	**FD/63-S/F FD/63-CPA**	Varga	
ESCORT 1.8 16V SW	97 /	**PD/35 PD/65**	Bendix Teves	**FD/63-S/F FD/63-CPA**	Varga	
ESCORT 1.8 Cabriolet / 1.8 XR3	/ 92	**PD/24**	Teves	**FD/64-S/F FD/64-CPA**	Varga	
ESCORT 1.8 XR3	84 / 92	**PD/24 PD/24-A PD/24-B**	Teves	**FD/64-S/F**		
ESCORT 16 V SW	96 /	**PD/35**	Teves	**FD/63-S/F FD/126-CPA**	Varga	
ESCORT 2.0i XR3	93 / 95	**PD/39**	Teves	**PD/36**	Teves	
ESCORT GT 1.9L / 1.8L	94 / 96	**PD/132**				
ESCORT HOBBY	93 / 96	**PD/24 PD/24-A PD/24-B**	Teves	**FD/64-S/F FD/64-CPA**	Varga	
ESCORT ZX2	98 / 01	**PD/132**		**PD/558**		
ESCORT ZX3	98 / 01	**PD/132**		**PD/1041**		
EXCURSION	01 / 05	**PD/62**		**PD/63**		
EXPEDITION	97 / 98	**PD/565**		**PD/566**		Americana
EXPEDITION	98 / 02	**PD/565**				Americana

MODEL / *MODELO*	YEAR - *AÑO*	FRONT *DELANTERA*	SYSTEM *SISTEMA*	REAR *TRASERA*	SYSTEM *SISTEMA*	OBS.
FORD						
EXPEDITION	97 / 99	**PD/565**		**PD/566**		
EXPEDITION	99 / 02	**PD/565**				
EXPEDITION	03 / 06	**PD/750**		**PD/751**		
EXPEDITION 4X4	97 / 02	**PD/565**		**PD/566**		
EXPEDITION LIMITED / KING RANCH / XLT 4X4 5.4L	07 / 10	**PD/1083**				
EXPLORER	93 / 95	**PD/374**	Bendix			Freio de mão **FD/99-CP**
EXPLORER	95 /	**PD/332**	Bendix	**PD/410**	Bendix	Freio de mão **FD/99-CP**
EXPLORER	91 / 94	**PD/374**				
EXPLORER	02 / 05	**PD/365**		**PD/736**		
EXPLORER	06 / 08	**PD/1023**				
EXPLORER	09 / 10			**PD/775**		
EXPLORER	11 / 13	**PD/1389**				
EXPLORER	13 /	**PD/1414**		**PD/1415**		
EXPLORER 4X4	91 / 94	**PD/374**				
EXPLORER 4X4	95 / 01	**PD/332**		**PD/410**		
EXPLORER SPORT	98 / 00	**PD/332**		**PD/410**		
EXPLORER SPORT	01 / 02	**PD/365**		**PD/410**		
EXPLORER SPORT TRACK	06 / 08	**PD/1023**				
F-100	60 / 66	**2038** **2038-T**				
F-100	67 / 85	**287-T**		**287-T**		
F-100	86 / 92	**PD/19-C**	Bendix	**287-T**		
F-100	56 / 61	**287**				
F-100	61 / 67	**2053-T**				
F-100	68	**2121-T**		**2006-T**	Bendix	1° Série
F-100	68 / 78	**2121-T**		**FD/68**		2° Série
F-100	71 / 83	**PD/19-C**				
F-100 / F-1000	93 /	**PD/19-C**	Bendix	**2080-T**	Bendix	
F-100 4x2 3.9 TD / XL	99 /	**PD/62**	Bosch	**FD/78**	Bendix	Argentina
F-100 4x2 3.9 XLT	99 /	**PD/62**	Bosch	**PD/63**	Bosch	Argentina
F-100 4x4 4.3 TD / XL / XLT	99 /	**PD/106**	Bendix	**2080-T**	Bendix	
F-100 USA	73 / 82	**PD/19-C**				
F-150	67 / 85	**287-T**		**287-T**		
F-150	86 / 92	**PD/19-C**	Bendix	**287-T**		
F-150	98			**PD/566**		Americana
F-150	00 / 04	**PD/565**				Americana
F-150	79 / 90	**PD/19-C**				
F-150	91 / 93	**PD/523**				
F-150	94 / 96	**PD/356**				
F-150	97 / 02	**PD/137**		**PD/566**		
F-150	99 / 03	**PD/565**		**PD/566**		
F-150	03 / 08	**PD/137**				
F-150	04 /	**PD/590**		**PD/591**		
F-150	04 / 08	**PD/590**		**PD/591**		
F-150	12 /			**PD/1412**		
F-150 4x4	93 /	**PD/19-C**	Bendix	**2080-T**	Bendix	
F-150 4X4	99 / 03	**PD/137**		**PD/566**		
F-150 BRONCO	94 / 96	**PD/356**	Bendix			Americana
F-150 RANGER	94 / 96	**PD/356**	Bendix			Americana
F-150 RANGER	79 / 93	**PD/19-C**	Bendix	**2053**		Americana
F-150 USA	75 / 86	**PD/19-C**				
F-150 USA	87 / 88	**PD/523**				
F-150 USA	94 / 96	**PD/356**				
F-200	75 / 80	**PD/19-C**				

MODEL / *MODELO*	YEAR - *AÑO*	FRONT *DELANTERA*	SYSTEM *SISTEMA*	REAR *TRASERA*	SYSTEM *SISTEMA*	OBS.
FORD						
F-200	81 / 84	**PD/539**				
F-200	85 / 91	**PD/539**				
F-200	80 / 85	**PD/19-C**				
F-200	80 / 85	**PD/539**				
F-250	98 /			**FD/101-CP**		Freio traseiro Ø330x70 /6
F-250		**FD/60**		**2146-T-S/F**		
F-250	97	**PD/565**		**PD/566**		Americana
F-250	98 / 99	**PD/565**				Americana
F-250	89 / 94	**PD/608**				
F-250	95 / 08	**PD/559**				
F-250	97 / 03	**PD/565**		**PD/566**		
F-250 5.0L / 5.8L	84 / 88	**PD/539**				
F-250 HD	05 / 07			**PD/642**		
F-250 SPORT FX4	04 / 07	**PD/643**		**PD/641**		
F250 SIMPLES	98 / 03			**FD/151-CP**		Freio de mão Ø206x42
F250 SUPER DUTY	98 / 03			**FD/151-CP**		Freio de mão Ø206x42
F250 SUPER DUTY	11 /13	**PD/1424**				
F-250 XL	98 /	**PD/62**	Bosch	**FD/78**		
F-250 XL 4X4 / XLT 4X2 / XLT 4X4	06 / 07	**PD/643**		**PD/641**		
F-250 XLT	98 / 02	**PD/62**	Bosch	**PD/63** **FD/78**	Bosch Bendix	
F-250 XLT	03 /	**PD/62**	Bosch	**FD/78**	Bendix	
F-250 XLT 4X2	00 /	**PD/62**				
F-350	60 / 66			**2042**	Bendix	
F-350	62 / 67	**2026-T**		**2042**		
F-350	68 / 71	**2026-AT**		**2042-A**	Bendix	
F-350	72 / 78	**2042-A**	Bendix	**FD/73**		
F-350	98 /	**PD/62**	Bosch	**FD/78**		
F-350	98 /			**FD/101-CP**		Freio traseiro Ø330x70 /6
F-350	67 /	**2137-RA**		**2137-RA**		
F-350	74 / 89	**PD/539**				
F-350	90 / 94	**PD/608**				
F-350	95 / 02	**PD/559**				
F-350	95 / 02	**PD/559**				
F-350	99 / 04	**PD/62**		**PD/63**		
F-350 4X4 USA	79 / 89	**PD/539**				
F-350 4X4 USA	90 / 94	**PD/608**				
F-350 HD	05 / 07	**PD/643**		**PD/641**		
F-350 HD	08 / 09	**PD/643**		**PD/641**		
F-350 SUPER DUTY	11 / 13	**PD/1424**				
F-350 USA	80 / 85	**PD/539**				
F-400	75 / 77	**2042-A**	Bendix	**FD/72**	Bendix	
F-400	92 /	**PD/102**		**FD/72**		
F-450 SUPER DUTY	11 / 13	**PD/1424**				
F-450 V10	97 / 98	**PD/654**		**PD/570**		
F-450 V10	99 / 04	**PD/570**		**PD/570**		
F-450 V10	05 / 08	**PD/640**		**PD/641**		
F-450 V10 / V8 DIESEL 6.8L / 6.0L	09 /	**PD/640**		**PD/640**		
F-450 V8	94 / 98	**PD/654**		**PD/654**		
F-500	55 / 63	**2043**		**2032**		
F-550 V10	99 / 04	**PD/570**		**PD/570**		
F-550 V10	05 /	**PD/640**		**PD/641**		
F-600	68 / 69	**9220**		**4596-B**		
F-600	70 / 71	**4564-A**		**9233**		

MODEL / *MODELO*	YEAR - *AÑO*	FRONT *DELANTERA*	SYSTEM *SISTEMA*	REAR *TRASERA*	SYSTEM *SISTEMA*	OBS.
FORD						
F-600	72 / 87	**9232**		**9233**		
F-600	59 / 60	**2060**		**2032**		
F-600	60 / 71	**2060**		**4564-A**		
F-600	72 / 80	**FD/74**	Bendix	**FD/75**	Bendix	
F-600 V8 6.3L	84 / 89	**PD/126**				
F-650	01 / 02	**PD/143**		**PD/143**		
F-650	04 / 09	**PD/146**		**PD/146**		
F-700	95 / 98	**PD/653**				
F-700	84 / 94	**PD/653**				
F-700	68 / 69	**9220**		**4596-B**		
F-700	70 / 71	**4564-A**		**9233**		
F-700	72 / 87	**9232**		**9233**		
F-700	76 / 80	**FD/76**	Bendix	**4514-F**	Bendix	
F-700	00 /	**PD/126**				
F-750	71 / 77	**FD/76**	Bendix	**4514-F**	Bendix	
F-750	04 / 08	**PD/146**		**PD/146**		
F-800	95 / 99	**PD/653**				
F-800	83 / 89	**PD/653**				
F-800	86 / 88	**PD/126**				
F-900	66 /	**2060**	Frenaire	**4317-G**	Frenaire	
F-1000	79 / 94	**PD/19-C**	Bendix	**2080-T**	Bendix	
F-1000	95 / 98	**PD/106**	Bendix	**2080-T**	Bendix	
F-1000	00 /	**PD/113**	Bosch			
F-1000 4x4	93 / 94	**PD/105**	Bendix	**2080-T**	Bendix	
F-1000 4x4	94 / 98	**PD/106**	Bendix	**2080-T**	Bendix	
F-1000 Turbo	90 / 94	**PD/19-C**	Bendix	**2080-T**	Bendix	
F-1000 Turbo	95 / 98	**PD/106**	Bendix	**2080-T**	Bendix	
F-2000	80 / 85	**PD/19-C**	Bendix	**FD/71**		
F-4000	75 / 84	**2042-A**	Bendix	**FD/72**	Bendix	
F-4000	85 / 98	**PD/102**	Varga	**FD/72**	Bendix	
F-4000 Turbo	96 / 98	**PD/109**	Varga	**PD/109**	Varga	
F-4000 Turbo	98 / 01	**PD/62**	Bosch	**PD/62**	Bosch	
F-4000 Turbo	02 /	**PD/62**	Bosch	**PD/62** **FD/72**	Bosch Bendix	
F-7000	84 / 87	**PD/653**				
F-7000	76 / 80	**FD/74**	Bendix	**FD/75**	Bendix	
F-7000	79 / 80		Varga	**FD/80**	Varga	
F-7000	82 / 90	**9232**		**9233**		
F-8000	83 / 86	**PD/653**				
F-8000	77 / 80	**FD/76**	Bendix	**4514-F**	Bendix	
F-8500	77 / 79	**FD/76**	Bendix	**4514-F**	Bendix	
F-11000	81 / 89	**FD/74**	Bendix	**FD/75**	Bendix	
F-11000	89 / 92	**FD/83**	Bendix	**FD/85**	Bendix	
F-12000	81 / 82		Varga	**FD/80**	Varga	
F-12000	87 / 88	**FD/74**	Bendix	**FD/75**	Bendix	
F-12000	87 / 89	**FD/83**	Bendix	**4515-G**	Bendix	
F-12000	89 / 92	**FD/83**	Bendix	**FD/84**	Bendix	
F-12000	92 / 96	**FD/83**	Bendix	**FD/85**	Bendix	
F-12000	97 /	**FD/86**	Master	**FD/87**	Master	
F-13000	81 / 86	**FD/76**	Bendix	**4514-F**	Bendix	
F-14000	87 / 89	**FD/83**	Bendix	**4515-G**	Bendix	
F-14000	89 / 96	**FD/83**	Bendix	**FD/84**	Bendix	
F-14000	97 /	**FD/86**	Master	**FD/88**	Master	
F-16000	99 /	**FD/87**	Master	**FD/88**	Master	

MODEL / *MODELO*	YEAR - *AÑO*	FRONT *DELANTERA*	SYSTEM *SISTEMA*	REAR *TRASERA*	SYSTEM *SISTEMA*	OBS.
FORD						
F-19000	81 / 82		Varga	**FD/80**	Varga	
F-21000	81 / 83	**FD/76**	Bendix	**4514-F**	Bendix	3° eixo 4514-F
F-22000	82 / 85	**FD/76**	Bendix	**4514-F**	Bendix	3° eixo 4514-F
F-22000	86 / 89	**FD/83**	Bendix	**4515-G**	Bendix	3° eixo 4515-G
F-22000	89 / 91	**FD/83**	Bendix	**FD/84**	Bendix	3° eixo FD/84
FAIRLANE	69 / 73			**2006-RA**		6 Cilindros
FAIRLANE	74 / 80	**PD/9**	Varga	**2006-RA**		
FALCON FUTURA	65 / 70	**2051-A 2051-AT**		**2012-B 2012-BT**		
FALCON RANCHERA	71 / 91	**PD/9**	Varga	**2012-B 2012-BT**		
FIESTA	98 / 00	**PD/34**				
FIESTA	98 / 00	**PD/55**				
FIESTA 1.0	96 / 97	**PD/55**	Teves	**FD/64-S/F FD/134-CP**	Varga	Importado
FIESTA 1.0	98 / 02	**PD/55**	Teves	**FD/61-S/F FD/61-CPA**	Varga	
FIESTA 1.0 SOHC	02 / 04-09	**PD/55**	Teves	**FD/98-CP**	Teves	sem ABS
FIESTA 1.0 SOHC	05-09 /	**PD/91**	Teves	**FD/98-CP**	Teves	sem ABS
FIESTA 1.0 SOHC Supercharger	02 / 02-09	**PD/65**	Teves	**FD/98-CP**	Teves	sem ABS
FIESTA 1.0 SOHC Supercharger	03-09 /	**PD/79**	Teves	**FD/98-CP**	Teves	sem ABS
FIESTA 1.0 SOHC Supercharger	02 / 02-09	**PD/497**	Teves	**FD/98-CP**	Teves	com ABS
FIESTA 1.0 SOHC Supercharger	03-09 /	**PD/80**	Teves	**FD/98-CP**	Teves	com ABS
FIESTA 1.3	95 / 97	**PD/55**	Teves	**FD/64-S/F FD/134-CP**	Varga	Importado
FIESTA 1.3	98 / 00	**PD/55**	Teves	**FD/61-S/F FD/61-CPA**	Varga	
FIESTA 1.3I (MEXICANO)	08-95 / 01-02	**PD/1378**				
FIESTA 1.4I (MEXICANO)	04-96 / 01-02	**PD/1378**				
FIESTA 1.4 16V	96 / 97	**PD/65**	Teves	**FD/64-S/F FD/134-CP**	Varga	Importado
FIESTA 1.4 16V	98 / 99	**PD/65**	Teves	**FD/61-S/F FD/61-CPA**	Varga	
FIESTA 1.4 16V	96	**PD/34**	Teves	**FD/64-S/F FD/134-CP**	Varga	Europeo
FIESTA 1.4 D	02 / 02-09	**PD/497**	Teves	**FD/98-CP**	Teves	com ABS
FIESTA 1.4 D	03-09 /	**PD/80**	Teves	**FD/98-CP**	Teves	com ABS
FIESTA 1.6	99 / 02	**PD/65**	Teves	**FD/61-S/F FD/61-CPA**	Varga	
FIESTA 1.6L	03 / 08	**PD/65**				
FIESTA 1.6 SOHC	02 / 02-09	**PD/65**	Teves	**FD/98-CPA**	Teves	sem ABS
FIESTA 1.6 SOHC	03-09 / 10	**PD/79**	Teves	**FD/98-CPA**	Teves	sem ABS
FIESTA 1.6 SOHC	02 / 03-09	**PD/497**	Teves	**FD/98-CPA**	Teves	com ABS
FIESTA 1.6 SOHC	04-09 / 10	**PD/80**	Teves	**FD/98-CPA**	Teves	com ABS
FIESTA 1.8 D	00 /	**PD/65**	Teves	**FD/61-S/F FD/61-CPA**	Varga	Brasilero
FIESTA HUNDRED 3.0L	05 / 07	**PD/1021**		**PD/768**		
FIESTA IKON	01 / 05	**PD/34**				
FIESTA SEDAN/ MANUAL	09 / 10	**PD/65**				
FIESTA SEDAN/ TRANS AUTO	08 / 09	**PD/497**				
FIESTA SIGMA 1.5 16V	13 /	**PD/1097**		**FD/152-CPA**	Lucas	Freio traseiro Ø203x21
FIESTA SIGMA 1.6 16V	10 /	**PD/1097**		**FD/152-CPA**	Lucas	Freio traseiro Ø203x21
FLEX	13 /	**PD/1414**		**PD/1415**		
FOCUS	05 / 07	**PD/767**				
FOCUS	06 / 07	**PD/767**		**PD/480**		
FOCUS 2.0L	00 / 04	**PD/442**				
FOCUS 1.8 TDi GHIA / LX 4 y 5 Puertas	99 /	**PD/442**	Teves	**PD/480**	Girling	
FOCUS 1.8i 16v LX / CLX 5 Puertas	99 /	**PD/442**	Teves	**PD/480**	Girling	

MODEL / *MODELO*	YEAR - *AÑO*	FRONT *DELANTERA*	SYSTEM *SISTEMA*	REAR *TRASERA*	SYSTEM *SISTEMA*	OBS.
FORD						
FOCUS 2.0i 16V CLX / GHIA 4 y 5 Puertas	99 /	**PD/442**	Teves	**PD/480**	Girling	
FOCUS HATCH 1.6 8V GLX	04 / 08	**PD/442**	Teves	**FD/138-CPA**		
FOCUS HATCH 1.6 GL	04 / 08	**PD/442**	Teves	**FD/138-CPA**		
FOCUS HATCH 1.6L GL	09-09 /	**PD/767**	Teves	**PD/796**		
FOCUS HATCH 1.6L GL	08 / 08-09	**PD/1103**	Teves	**PD/796**		
FOCUS HATCH 1.6L GLX	09-09 /	**PD/767**	Teves	**PD/796**		
FOCUS HATCH 1.6L GLX	08 / 08-09	**PD/1103**	Teves	**PD/796**		
FOCUS HATCH 1.8 GL	99 / 03	**PD/442**	Teves	**FD/138-CPA**		
FOCUS HATCH 1.8 GLX	99 / 03	**PD/442**	Teves	**FD/138-CPA**		
FOCUS HATCH 2.0 16V GHIA	04 / 08	**PD/442**	Teves	**PD/480**	Teves	com ABS
FOCUS HATCH 2.0 16V GHIA	04 / 08	**PD/442**	Teves	**FD/138-CPA**		sem ABS
FOCUS HATCH 2.0 16V GLX	04 / 08	**PD/442**	Teves	**PD/480**	Teves	com ABS
FOCUS HATCH 2.0 16V GLX	04 / 08	**PD/442**	Teves	**FD/138-CPA**		sem ABS
FOCUS HATCH 2.0 GHIA	99 / 03	**PD/442**	Teves	**PD/480**	Teves	
FOCUS HATCH 2.0 GLX	99 / 03	**PD/442**	Teves	**PD/480**	Teves	
FOCUS HATCH 2.0L GHIA	09-09 /	**PD/767**	Teves	**PD/796**		
FOCUS HATCH 2.0L GHIA	08 / 08-09	**PD/1103**	Teves	**PD/796**		
FOCUS HATCH 2.0L GLX	09-09 /	**PD/767**	Teves	**PD/796**		
FOCUS HATCH 2.0L GLX	08 / 08-09	**PD/1103**	Teves	**PD/796**		
FOCUS SEDAN 1.6 8V GLX	04 / 08	**PD/442**	Teves	**FD/138-CPA**		
FOCUS SEDAN 1.6L GL	09-09 /	**PD/767**	Teves	**PD/796**		
FOCUS SEDAN 1.6L GL	08 / 08-09	**PD/1103**	Teves	**PD/796**		
FOCUS SEDAN 1.6L GLX	09-09 /	**PD/767**	Teves	**PD/796**		
FOCUS SEDAN 1.6L GLX	08 / 08-09	**PD/1103**	Teves	**PD/796**		
FOCUS SEDAN 1.8 GLX	99 / 03	**PD/442**	Teves	**FD/138-CPA**		
FOCUS SEDAN 2.0 16V GHIA	04 / 08	**PD/442**	Teves	**PD/480**	Teves	com ABS
FOCUS SEDAN 2.0 16V GHIA	04 / 08	**PD/442**	Teves	**FD/138-CPA**		sem ABS
FOCUS SEDAN 2.0 16V GLX	04 / 08	**PD/442**	Teves	**PD/480**	Teves	com ABS
FOCUS SEDAN 2.0 16V GLX	04 / 08	**PD/442**	Teves	**FD/138-CPA**		sem ABS
FOCUS SEDAN 2.0 GHIA	99 / 03	**PD/442**	Teves	**PD/480**	Teves	
FOCUS SEDAN 2.0 GLX	99 / 03	**PD/442**	Teves	**PD/480**	Teves	
FOCUS SEDAN 2.0L GHIA	09-09 /	**PD/767**	Teves	**PD/796**		
FOCUS SEDAN 2.0L GHIA	08 / 08-09	**PD/1103**	Teves	**PD/796**		
FOCUS SEDAN 2.0L GLX	09-09 /	**PD/767**	Teves	**PD/796**		
FOCUS SEDAN 2.0L GLX	08 / 08-09	**PD/1103**	Teves	**PD/796**		
FOCUS ST 2.5L	08 /	**PD/767**	Teves	**PD/480**		
FOCUS S POWER SHIFT 2.0	14 /	**PD/767**		**PD/796**		
FOCUS SE POWER SHIFT 2.0	14 /	**PD/767**		**PD/796**		
FOCUS TITANIUM 2.0 POWER SHIFT	14 /	**PD/767**		**PD/796**		
FOCUS TITANIUM PULS POWER SHIFT	14 /	**PD/767**		**PD/796**		
FOCUS ZX3	00 / 04	**PD/442**		**PD/796**		
FREESTAR	04 / 08	**PD/800**		**PD/765**		
FT-7000	79 / 80		Varga	**FD/80**	Varga	
FT-800 Air	84 / 86	**PD/653**				
FT-8000	84	**PD/653**				
FT-8000	77 / 80	**FD/76**	Bendix	**4514-F**	Bendix	
FT-900	85 / 86	**PD/653**				
FUSION	06 /	**PD/647**	Fomoco	**PD/646**		
FUSION 2.3L / 3.0L	06 /	**PD/647**	Fomoco	**PD/646**		
FUSION 3.5L	10 /	**PD/647**	Fomoco	**PD/646**		
FUSION 2.5L 16V	06 /	**PD/647**	Fomoco	**PD/646**		
FUSION 3.0L V6 24V	06 /	**PD/647**	Fomoco	**PD/646**		
FUSION	13 /	**PD/1432**	Teves	**PD/1513**	Teves	
FUSION 2.3L / 3.0L	13/	**PD/1432**	Teves	**PD/1513**	Teves	

MODEL / *MODELO*	YEAR - *AÑO*	FRONT *DELANTERA*	SYSTEM *SISTEMA*	REAR *TRASERA*	SYSTEM *SISTEMA*	OBS.
FORD						
FUSION 2.0 Flex	13/	**PD/1432**	Teves	**PD/1513**	Teves	
FUSION 2.0 EcoBoost (TNCC)	13/	**PD/1432**	Teves	**PD/1513**	Teves	
FUSION 2.0 EcoBoost (TNCD)	13/	**PD/1432**	Teves	**PD/1513**	Teves	
FUSION 2.0 EcoBoost (TNCF)	13/	**PD/1432**	Teves	**PD/1513**	Teves	
FUSION 2.0 EcoBoost	13/	**PD/1432**	Teves	**PD/1513**	Teves	
FUSION 2.5 Hybrid	13/	**PD/1432**	Teves	**PD/1513**	Teves	
FUSION 2,5	13/	**PD/1432**	Teves	**PD/1513**	Teves	
FUSION 2.5 (S7CB)	13/	**PD/1432**	Teves	**PD/1513**	Teves	
FUSION 2.0 Hybrid	13/	**PD/1432**	Teves	**PD/1513**	Teves	
FUSION 2.0 TDCi	13/	**PD/1432**	Teves	**PD/1513**	Teves	
FUSION 2.0 TDCi (T8CC)	13/	**PD/1432**	Teves	**PD/1513**	Teves	
FUSION 2.0 TDCi (T9CA)	13/	**PD/1432**	Teves	**PD/1513**	Teves	
GALAXI	95 /	**PD/44 PD/44-B**	Teves	**VW/276**	VW	
GALAXI	95 /	**PD/45**	Varga	**VW/276**	VW	
GALAXI 2.0 GHIA	89 /	**PD/28 PD/28-B**	Teves	**VW/276**	VW	
GALAXIE 500	71 / 76	**PD/19-C**				
GALAXIE-500	67 / 68	**2053-T**		**2053-T**		
GALAXIE-500	69 / 70	**2080-T**	Bendix	**2121-T**		
GALAXIE-500	71 / 80	**PD/1**	Teves	**2121-T**		
GALAXIE-500	80 / 82			**2121-T**		
GHIA 2.3L / 3.0L	91 / 94	**PD/542**				
GORDINI	64 / 68	**8049**		**8049**		
GRANADA	84 / 92	**PD/39**	Teves			
GRANDMARQUIS	91 / 94					
GRANDMARQUIS	98 / 02	**PD/618**		**PD/705**		
GRANDMARQUIS 4.6L	95 /	**PD/702**				
GRANDMARQUIS 4.6L	03 / 05	**PD/348**		**PD/349**		
GRANDMARQUIS 5.0L	82 / 84	**PD/679**				
IKON LATIN AMERICA	11 / 13	**PD/1425**				
INTERLAGOS	64 / 68	**8049**		**8049**		
ITAMARATY	65 / 71	**2006-T**	Bendix	**2006-T**	Bendix	
JEEP	56 / 59	**2011**		**2011**		
JEEP	60 / 83	**1219**		**1219**		
KA 1.6L	01 / 05	**PD/55**				
KA 1.6L	01 / 08	**PD/34**				
KA 1.0	97 / 13	**PD/55**	Teves	**FD/64-S/F**	Varga	
KA 1.0	98 / 04-09	**PD/55**	Teves	**FD/61-S/F FD/61-CPA**	Varga	
KA 1.0	05-09 / 13	**PD/91**	Teves	**FD/61-S/F FD/61-CPA**	Varga	
KA 1.0 / 1.3	97 / 04-09	**PD/55**	Teves	**FD/64-S/F FD/134-CP**	Varga	Brasilero
KA 1.3	97 / 04-09	**PD/55**	Teves	**FD/64-S/F**	Varga	
KA 1.3	97 / 04-09	**PD/55**	Teves	**FD/61-S/F FD/61-CPA**	Varga	
KA 1.3	05-09 / 13	**PD/91**	Teves	**FD/64-S/F**	Varga	
KA 1.3	05-09 / 13	**PD/91**	Teves	**FD/61-S/F FD/61-CPA**	Varga	
KA 1.6	01 / 13	**PD/65**	Teves	**FD/61-S/F FD/61-CPA**	Varga	
KA SE 1.0	09-14 /	**PD/1097**				
KA SE 1.0 PLUS	09-14 /	**PD/1097**				
KA SEL 1.0	09-14 /	**PD/1097**				
KA SE 1.5	09-14 /	**PD/1097**				
KA SE 1.5 PLUS	09-14 /	**PD/1097**				

MODEL / *MODELO*	YEAR - *AÑO*	FRONT *DELANTERA*	SYSTEM *SISTEMA*	REAR *TRASERA*	SYSTEM *SISTEMA*	OBS.
FORD						
KA SEL 1.5	09-14 /	**PD/1097**				
KA+ SE 1.0	09-14 /	**PD/1097**				
KA+ SE 1.0 PLUS	09-14 /	**PD/1097**				
KA+ SEL 1.0	09-14 /	**PD/1097**				
KA+ SE 1.5	09-14 /	**PD/1097**				
KA+ SE 1.5 PLUS	09-14 /	**PD/1097**				
KA+ SEL 1.5	09-14 /	**PD/1097**				
L-800	84	**PD/653**				
L-8000	84 / 89	**PD/653**				
LANDAU	76 / 80	**PD/1**	Teves	**2121-T**		
LANDAU	80 / 82			**2121-T**		
LN	95 / 97	**PD/653**				
LN-700	84 / 86	**PD/653**				
LN-7000	84 / 89	**PD/653**				
LN-800	84	**PD/653**				
LN-8000	84 / 89	**PD/653**				
LNT-800 / LNT-8000 / LT-800 / LT-8000	84	**PD/653**				
LOBO	97 / 99	**PD/137**				
LOBO	97 / 03	**PD/137**		**PD/566**		
LOBO	04 /	**PD/590**		**PD/591**		
LTD	69 / 70	**2080-T**	Bendix	**2121-T**		
LTD	71 / 80	**PD/1**	Teves	**2121-T**		
LTD	80 / 82			**2121-T**		
MAVERICK	73 / 76			**2012-BT**		6 e 8 Cil.
MAVERICK	75 / 76			**2012-BT**		4 Cil.
MAVERICK	75 / 76	**PD/1**	Teves	**2012-BT**		4, 6 e 8 Cil.
MAVERICK	77 / 79	**PD/1**	Teves	**CB/42**		4, 6 e 8 Cil.
MICROBUS	82 / 90	**PD/539**				
MONDEO	01 /	**PD/586**		**PD/599**		
MONDEO 1.6 TI 16V				**PD/1332**	TRW	
MONDEO 1.6	93 / 96	**PD/352 PD/352-A**	Teves	**FD/141-CPA**		
MONDEO 1.8	93 / 96	**PD/352 PD/352-A**	Teves	**FD/141-CPA**		
MONDEO 1.8 CLX	94 / 01	**PD/352 PD/352-A**	Teves	**FD/140-CPA**		
MONDEO 1.8 SW	94 / 01	**PD/352 PD/352-A**	Teves	**FD/140-CPA**		
MONDEO 2.0	93 / 96	**PD/352 PD/352-A**	Teves	**FD/141-CPA**		
MONDEO 2.0 16V	07 /			**PD/1332**	TRW	
MONDEO 2.0 16 V GLX	94 / 01	**PD/352 PD/352-A**	Teves	**FD/140-CPA**		
MONDEO 2.0 16V GHIA/ 2.0i 16V GHIA	94 /	**PD/352-A**	Teves	**PD/402-A**	Bendix	
MONDEO 2.0 16V ZTC GHIA	94 / 01	**PD/352-A**	Teves	**FD/140-CPA**		
MONDEO 2.0 CLX	94 / 01	**PD/352 PD/352-A**	Teves	**FD/140-CPA**		
MONDEO 2.0 SW	94 / 01	**PD/352 PD/352-A**	Teves	**FD/140-CPA**		
MONDEO CL / CLX 1.8 / CLX 1.8 TD	94 /	**PD/352**	Teves	**FD/63-S/F**		
MUSTANG	94 / 98	**PD/694**		**PD/698**		
MUSTANG	99 / 02	**PD/722**		**PD/698**		
MUSTANG COBRA 4.6L / 5.0L	95 / 98	**PD/1032**		**PD/698**		
MUSTANG COUPE	07 / 09			**PD/1068**		
MUSTANG GT	03 / 04	**PD/1032**		**PD/699**		
MUSTANG GT	05 / 09			**PD/1068**		
MUSTANG 3.7L	11 /	**PD/1382**		**PD/1383**		

MODEL / *MODELO*	YEAR - *AÑO*	FRONT *DELANTERA*	SYSTEM *SISTEMA*	REAR *TRASERA*	SYSTEM *SISTEMA*	OBS.
FORD						
MUSTANG 5.0L	11 /	**PD/1381**		**PD/1383**		
MUSTANG 5.0L				**PD/1402**		
MUSTIQUE	95 / 00	**PD/352**				
MUSTIQUE	98 / 00	**PD/352-A**		**PD/402-A**		
MUSTIQUE	98 / 00	**PD/352-A**				
MUSTIQUE 2.0L / 2.5L	95 / 00	**PD/352**		**PD/402-A**		
ORION	/ 07-95	**PD/39**	Teves	**PD/36**	Teves	
ORION 1.6 DL / GL/ i GUIA/ i L / i GL	08-95 /	**PD/24**	Teves	**FD/63-S/F**		
P-350	86 / 94	**PD/539**				
PAMPA 4x2	81 / 83	**PD/10** **PD/18**	Bendix Teves	**CB/40**	Varga	
PAMPA 4x2	84 / 97	**PD/22** **PD/22-B**	Varga	**CB/40**	Varga	
PAMPA 4x4	84 / 95	**PD/22** **PD/22-B**	Varga	**CB/42**		
PICK-UP	58 / 61	**1219**		**1219**		
PICK-UP F-75	62 / 83	**2006-T**	Bendix	**2006-T**	Bendix	
PROBE	93 / 97	**PD/610**				
RANGER	93 / 95	**PD/374**	Bendix	**FD/100-CP**		Freio traseiro Ø228x47mm
RANGER	95 / 98	**PD/332**	Bendix	**FD/150-CP**	Bendix	
RANGER	98 / 05	**PD/332**	Bendix	**FD/137-CP**		
RANGER	05 /	**PD/332**	Bendix	**CB/51** **CB/51-CP**	Bosch	
RANGER	86 / 87	**PD/605**				
RANGER 4WD	11 /	**PD/1389**				
RANGER 4WD	10	**PD/365**		**PD/1018**		
RANGER RWD	10	**PD/365**		**PD/1018**		
RANGER 4x4	10-07 /	**PD/365**	Bosch	**CB/51** **CB/51-CP**	Bosch	com ABS
RANGER (ER, EQ) 2.5 XL	09.98 /- 09.03 /	**PD/1342**				
RANGER (ET) 2.3	01.06 /- 12.11 /	**PD/1342**				
RANGER (ET) 2.3 XLS	07.09 /- 06.12 /	**PD/1342**				
RANGER LIMITED 2.5 FLEX	12 /	**PD/1434**	Fomoco			
RANGER LIMITED PLUS 2.5 FLEX	12 /	**PD/1434**	Fomoco			
RANGER LIMITED 3.2 DIESEL 4x4	12 /	**PD/1434**	Fomoco			
RANGER LIMITED PLUS 3.2 DIESEL 4x4	12 /	**PD/1434**	Fomoco			
RANGER SPORT 2.5 FLEX	12 /	**PD/1434**	Fomoco			
RANGER XLS 2.2 DIESEL 4X4	12 /	**PD/1434**	Fomoco			
RANGER XLS 2.5 FLEX	12 /	**PD/1434**	Fomoco			
RANGER XLS 3.2 DIESEL 4x4	12 /	**PD/1434**	Fomoco			
RANGER XLT 2.5 FLEX	12 /	**PD/1434**	Fomoco			
RANGER XLT 3.2 DIESEL 4x4	12 /	**PD/1434**	Fomoco			
RANGER 4X4 USA	83 / 89	**PD/374**				
RANGER USA	83 / 94	**PD/374**				
RANGER XL / XLT	93 / 95	**PD/374**	Bendix			
RANGER XL / XLT	03 / 08	**PD/365**				
RANGER XL / XLT 2.3L	96 / 02	**PD/332**				
ROYALE	92 / 94	**PD/28**	Teves	**VW/276**	VW	
ROYALE	94 / 96	**PD/44** **PD/44-B** **PD/45**	Teves Teves Varga	**VW/276**	VW	
RURAL	58 / 77	**1219**		**1219**		
SABLE	94 / 00	**PD/389**		**PD/696**		
SABLE	01 / 04	**PD/678**		**PD/696**		
SABLE	01 / 04	**PD/678**				
SCALA	84 / 88	**PD/22** **PD/22-B**	Varga	**FD/65** **FD/66**	Bendix Varga	

MODEL / *MODELO*	YEAR - *AÑO*	FRONT *DELANTERA*	SYSTEM *SISTEMA*	REAR *TRASERA*	SYSTEM *SISTEMA*	OBS.
FORD						
SIERRA 1.6	85 /	**PD/24**	Teves	**FD/69-S/F**		
SIERRA 2.3 XRA	85 /	**PD/24-A** **PD/24-B**	Teves	**FD/69-S/F**		
SHELBY GT500				**PD/1402**		
SUPERCARGO 110E / 140E	01-91 / 12-98	**PD/156**	Bendix			
SUPERCARGO 210E / 280E	01-91 / 12-98	**PD/156**	Bendix			
SUPERCARGO 320E	01-91 / 12-98	**PD/156**	Bendix			
TAUNUS L / GL / GHIA / GT /SP	76 / 84	**PD/306**	Varga	**FD/70-L**		
TAURUS	94 / 02	**PD/389**	Girling	**PD/696**		
TAURUS	89 / 93	**PD/1040**				
TAURUS	90 / 91	**PD/1040**				
TAURUS	12 / 13	**PD/1389**				
TAURUS SW	91 / 95	**PD/389**	Girling	**PD/696**		
THUNDERBIRD	89 / 92	**PD/1033**				
THUNDERBIRD	91 / 92	**PD/1033**				
THUNDERBIRD	93 / 97	**PD/694**				
THUNDERBIRD 3.8L / 4.6L / 5.0L	93 / 96	**PD/694**				
THUNDERBIRD 3.9L	03 /	**PD/1008**		**PD/76**		
THUNDERBIRD USA	77 / 79	**PD/542**				
TOPAZ	84 / 94	**PD/542**				
TRANSIT	96 /	**PD/350**	Girling			Rodado 14"
TRANSIT	96 /	**PD/351**	Girling			
TRANSIT 2.0 Di	00 /	**PD/342**	Bosch			
TRANSIT 2.0 TDCi	00 /	**PD/342**	Bosch			
TRANSIT 2.3 16V	00 /	**PD/342**	Bosch			
TRANSIT 2.4 Di	00 /	**PD/342**	Bosch			
TRANSIT 2.4 TDE	00 /	**PD/342**	Bosch			
TRANSIT FURGÃO 3330 2.4	06 /	**PD/1028-B**	Knorr	**PD/1029-A**	Knorr	
TRANSIT FURGÃO 3350 2.4	06 /	**PD/1028-B**	Knorr	**PD/1029-A**	Knorr	
TRANSIT VAN 3550 2.4	06 /	**PD/1028-B**	Knorr	**PD/1029-A**	Knorr	
VERONA	89 / 93	**PD/24** **PD/24-A** **PD/24-B**	Teves	**FD/64-S/F** **FD/64-CPA**	Varga	
VERONA 1.6	94 / 96	**PD/35**	Bendix	**FD/63-S/F** **FD/126-CPA**	Varga	
VERONA 1.8	93 / 96	**PD/34**	Teves	**FD/63-S/F** **FD/126-CPA**	Varga	
VERONA 1.8	94 / 96	**PD/35**	Bendix	**FD/63-S/F** **FD/126-CPA**	Varga	
VERONA 2.0	93 / 96	**PD/34**	Teves	**FD/63-S/F** **FD/126-CPA**	Varga	
VERONA 2.0i	93 / 96	**PD/39**	Teves	**PD/36**	Teves	
VERSAILLES	91 / 94	**PD/28**	Teves	**VW/276**	VW	
VERSAILLES	94 / 96	**PD/44** **PD/44-B** **PD/45**	Teves Teves Varga	**VW/276**	VW	
WINDSTAR	95 / 97	**PD/389**	Girling			
WINDSTAR	95 / 99			**PD/560**		
WINDSTAR	99 / 03	**PD/575**		**PD/560**		
WINDSTAR	02 / 04	**PD/570**		**PD/570**		
FOTON						
AUMARK 1013	13 /	**PD/1411**	Akebono			
FREIGHTLINER						
FC-70	02 / 06	**FD/86**		**4707**		
FC-70 (CARGO)	98	**FD/86**		**4707**		

MODEL / *MODELO*	YEAR - *AÑO*	FRONT *DELANTERA*	SYSTEM *SISTEMA*	REAR *TRASERA*	SYSTEM *SISTEMA*	OBS.
FREIGHTLINER						
FC-80	02 / 06	**FD/86**		**4707**		
FC-80 (CARGO)	98	**FD/86**		**4707**		
FL-60	99 / 03	**FD/86**		**4707**		
FL-70 (BUSSINES CLASS)	98 / 04	**FD/86**		**4707**		
FL-80 (4x2)	99 / 04	**4720**		**4707**		
FL-80 (6x2)	99 / 04	**4720**		**4707**		
FL-80 (6x4)	98 / 04	**4720**		**4707**		
FL-80 24/26 (6x4)	98 / 04	**4720**		**4707**		
FL-106 24 TON (6x4)	98 / 03	**4720**		**4707**		
M2 106 52K (6x4) QR	07 / 09	**FD/86**		**4707**		
M2 25 K (4x2)	05 / 06	**FD/86**		**4707**		
M2 35 K (4x2)	04 /09	**FD/86**		**4707**		
M2 52 K (6x2)	05 / 09	**FD/86**		**4707**		
M2 52 K (6x4)	04 / 09	**FD/86**		**4707**		
M2 58 K (6x2)	05	**FD/86**		**4707**		
M2 58 K (6x4)	06 / 09	**FD/86**		**4707**		
M2 58 K EXTENDED CAB	05 / 09	**FD/86**		**4707**		
FREIGHTLINER CONSTRUCCIÓN						
FL 112 (6X4) QR	98 / 04	**4715**		**4707**		
FLD 112 (6X4) SD	99 / 04	**4715**		**4707**		
FLD 120 SD	05 / 08			**4707**		
M2 112 (6x4)	05 / 08			**4707**		
M2 112 (6x4) QR	05 / 09	**FD/86**		**4707**		
M2 112 SD	09	**FD/86**		**4707**		
FREIGHTLINER TRACTOCAMIONES						
ARGOSY	98 / 08	**FD/86**		**4707**		
CENTURY CST 120 (6x4)	01 / 08	**FD/86**		**4707**		
COLUMBIA	01 / 08	**FD/86**		**4707**		
COLUMBIA 120	09	**FD/86**		**4707**		
COLUMBIA CL 112	05 / 08	**FD/86**		**4707**		
COLUMBIA CL 112 MID ROOF CAB 48”	05 / 08	**FD/86**		**4707**		
CORONADO MOD. CC 132	04 / 08	**FD/86**		**4707**		
CST 120	98 / 02	**FD/86**		**4707**		
FL 80 QR (4x2)	98 / 04	**FD/86**		**4707**		
FL 106	98 / 02	**FD/86**		**4707**		
FL 112 QR (6x4)	98 / 04	**FD/86**		**4707**		
FLD 112	99 / 04	**FD/86**		**4707**		
FLD 120	98 / 08	**FD/86**		**4707**		
FRUEHAUF / BENALU / SMB						
SMB O O-A1880 C5-12				**19718/719 00**		
SMB O O-A2020 C5-09				**19718/719 00**		
311 x 190,0 mm				**19604/605 00**		MER Axle
381 x 178,0 mm				**19384/385 00**		
414 x 150,0 mm				**19049/199 95**		5 DF
419 x 178,0 mm				**19613/614 00**		SMB C 2 axle
419 x 178,0 mm (16.1/2 x 7”)				**19036/037 00**		
419 x 178,0 mm (alternative)				**19790/791 00**		
419 x 203,0 mm				**19557/606 00**		SMB C 1 axle
419 x 203,0 mm (16.1/2 x 8”)				**19365/366 00**		
420 x 160,0 mm				**19200 00**		

MODEL / *MODELO*	YEAR - *AÑO*	FRONT *DELANTERA*	SYSTEM *SISTEMA*	REAR *TRASERA*	SYSTEM *SISTEMA*	OBS.
FRUEHAUF / BENALU / SMB						
420 x 180,0 mm				**19032 00**		BPW Axle
420 x 200,0 mm				**19094 00**		BPW Axle
HALDEX INTRADISC DB22 - 22.5"				**PD/170**	Haldex	
Knorr SB 7000				**PD/116**	Knorr	
PAN 22 - 22.5"				**PD/197**	Wabco	
GENERAL MOTORS						
400 RALLY	74 / 76	**PD/9**	Varga	**2012-B 2012-BT**		
400 SPECIAL	68 / 73	**2066 S/F**		**2012-B 2012-BT**		
400 SUPER	63 / 67	**2012-B 2012-BT**		**2012-B 2012-BT**		
400 SUPER SPORT	68 / 73	**2066 S/F**		**2012-B 2012-BT**		
400 SUPER SPORT	74 / 76	**PD/9**	Varga	**2012-B 2012-BT**		
A-10	79 / 08-80	**PD/19-C**	Bendix	**2006-T**	Bendix	
A-10	79 / 94	**PD/19-C**	Bendix	**2080-T**	Bendix	4 e 6 Cil.
A-14	09-80 / 85	**PD/19-C**	Bendix	**2006-T**	Bendix	4 Cil.
A-20	85 / 93	**PD/19-C**	Bendix	**2080-T**	Bendix	4 e 6 Cil.
A-20	93 / 94	**PD/105**	Bendix	**CB/52**		4 e 6 Cil.
A-20	94 / 97	**PD/106**	Bendix	**CB/52**		
A-40	85 / 96	**PD/103**	Teves	**FD/72**	Bendix	
A-60	81 / 85	**VW/256**	Bendix	**VW/257**	Bendix	Est. 2095
ACADIA 3.6L	07 / 09	**PD/1024**		**PD/738**		
AGILE LTZ FLEX 1.4	09 / 11-09	**PD/42**	Teves	**CB/49 CB/49-CPA**	Varga	Pistão de Ferro Fundido
AGILE LTZ FLEX 1.4	12-09 /	**PD/82**	Teves	**CB/49 CB/49-CPA**	Varga	Pistão de Aço
ASTRA (LATIM AMERICA)	00 / 05			**PD/1395**		
ASTRA 1.8	99 /	**PD/57**	Teves	**CB/46-CP**	Bosch	Aro 14"
ASTRA 1.8 (Aro 14")	99 /	**PD/57**	Teves	**PD/38**	Teves	Freio de mão **CB/175-CP**
ASTRA 1.8i 16V	98 /	**PD/57**	Teves	**PD/477**	Bosch	
ASTRA 2.0	95 / 98	**PD/52**	Teves			
ASTRA 2.0 16 V	01 / 02-10	**PD/72**	Teves	**PD/38**	Teves	Freio de mão **CB/175-CP**
ASTRA 2.0 16 V	01 / 02-10	**PD/72**	Teves	**CB/46-CP**	Bosch	
ASTRA 2.0 16 V	03-10 /	**PD/93**	Teves	**PD/38**	Teves	Freio de mão **CB/175-CP**
ASTRA 2.0 16 V	03-10 /	**PD/93**	Teves	**CB/46-CP**	Bosch	
ASTRA 2.0 8V	99 /	**PD/57**	Teves	**CB/46-CP**	Bosch	Aro 14"
ASTRA 2.0 8V (Aro 14")	99 /	**PD/57**	Teves	**PD/38**	Teves	Freio de mão **CB/175-CP**
ASTRA 2.0 TD	98 /	**PD/57**	Teves	**PD/477**	Bosch	
ASTRA 2.0i 16V	01 /	**PD/72**	Teves	**PD/477**	Bosch	
ASTRA 2.2L	01 / 03	**PD/72**		**PD/600**		
AGILE EFFECT	14 /	**PD/82**	Teves	**CB/49 CB/49-CPA**	Varga	Pistão de Aço
ASTRA G CONVERTIBLE 1.6 16 / 1.8 16V / 2.2 16V	03-01 / 10-05	**PD/1380**				
ASTRA G COUPE 1.8 16V	03-00 / 05-05	**PD/1380**				
ASTRA G COUPE 2.0 16V TURBO	09-00 / 08-01	**PD/1380**				
ASTRA G COUPE 2.2 16V	09-00 / 05-05	**PD/1380**				
ASTRA G ESTATE 1.2 16V	02-98 / 09-00	**PD/1380**				
ASTRA G ESTATE 1.4 16V	06-98 / 07-04	**PD/1380**				
ASTRA G ESTATE 1.6	09-00 / 07-04	**PD/1380**				
ASTRA G ESTATE 1.6 16V	02-98 / 07-04	**PD/1380**				
ASTRA G ESTATE 1.7 DTI 16V	02-00 / 07-04	**PD/1380**				
ASTRA G ESTATE 1.7 TD	02-98 / 08-00	**PD/1380**				
ASTRA G ESTATE 1.8 16V	02-98 / 07-04	**PD/1380**				

MODEL / *MODELO*	YEAR - *AÑO*	FRONT *DELANTERA*	SYSTEM *SISTEMA*	REAR *TRASERA*	SYSTEM *SISTEMA*	OBS.
GENERAL MOTORS						
ASTRA G ESTATE 2.0 16V	02-98 / 07-04	**PD/1380**				
ASTRA G ESTATE 2.0 DI	02-98 / 07-04	**PD/1380**				
ASTRA G ESTATE 2.0 DTI	08-99 / 04-07	**PD/1380**				
ASTRA G HATCHBACK	02-98 / 12-09	**PD/1380**				
ASTRA G SALOON	09-98 / 12-09	**PD/1380**				
ASTRA OB 2.0L	04 / 06	**PD/57**		**PD/38**		
ASTRA OB 2.4L	04 / 06	**PD/72**		**PD/38**		
ASTRA OE 1.8L	06 / 07	**PD/72**		**PD/600**		
ASTRA RIN 14" 1.8L	00 / 03	**PD/57**		**PD/477**		
ASTRA SW 2.0	95 / 98	**PD/52**	Teves			
ASTRA UNIDADES CON ABS	00 / 03	**PD/72**		**PD/600**		
ASTRO	03 / 05	**PD/572**				
AVALANCHE 1500	02	**PD/572**		**PD/760**		
AVALANCHE 1500 4WD	03 / 06	**PD/572**		**PD/760**		
AVALANCHE 1500 RWD	03 / 06	**PD/572**				
AVALANCHE 2500	02 / 06	**PD/571**		**PD/572**		
AVALANCHE 4X2	03 / 06	**PD/572**		**PD/589**		
AVALANCHE 4X2	07 / 07	**PD/594**		**PD/731**		
AVALANCHE 4X4	07 / 09	**PD/594**		**PD/731**		
AVALANCHE 4X4 5.3L	02 / 06	**PD/572**		**PD/589**		
AVEO	04 / 10	**PD/817**	Akebono			
AVEO	06 /	**PD/818**	Akebono			
AVEO 1.6L	08 /	**PD/475**				
BEDFORD Camión y Omnibus	60 / 63	**9200**		**9201**		
BEDFORD Camión y Omnibus	64 / 68	**9220**		**9201**		
BERETTA	96 /	**PD/508**				
BLAZER	87 / 89	**PD/774**				
BLAZER	90 / 95	**PD/517**				
BLAZER	96 / 03	**PD/776**		**PD/615**		
BLAZER 4x2 Cap.1000 kg	95 /	**PD/107**	Varga	**CB/51 CB/51-CP**	Bosch	Roda 6 furos
BLAZER 4x2 Cap.750 kg	95 /	**PD/107**	Varga	**CB/132-CP**	Bendix	Roda 5 furos
BLAZER 4x4 Cap.1000 kg	97 / 08-05	**PD/110**	Delphi	**CB/51 CB/51-CP**	Bosch	Roda 6 furos
BLAZER 4x4 Cap.1000 kg	09-05 /	**PD/107**	Varga	**CB/51 CB/51-CP**	Bosch	Roda 6 furos
BLAZER 4x4 Cap.750 kg	97 / 08-05	**PD/110**	Delphi	**CB/132-CP**	Bendix	Roda 5 furos
BLAZER 4x4 Cap.750 kg	09-05 /	**PD/107**	Varga	**CB/132-CP**	Bendix	Roda 5 furos
BLAZER 4X4 (4 cil.)	95 /			**CB/132-CPA**		Freio traseiro Ø 279,4x52mm
BLAZER 4X4 (6 cil.)	95 /			**CB/51-CPA**		Freio traseiro Ø 279,4x65mm
BLAZER USA	83 / 89	**PD/517**				
BONANZA	90 / 94	**PD/19-C**	Bendix	**2080-T**	Bendix	4 e 6 Cil.
BONANZA	94 / 97	**PD/106**	Bendix	**CB/52**		
C-10	64 / 78	**2006-T**	Bendix	**2006-T**	Bendix	
C-10	79 / 94	**PD/19-C**	Bendix	**2080-T**	Bendix	
C-10	79 / 08-80	**PD/19-C**	Bendix	**2006-T**	Bendix	
C-10	85 / 94	**PD/19-C**	Bendix	**2080-T**	Bendix	4 e 6 Cil.
C-10	72 / 86	**PD/324**				
C-10	92 / 93	**PD/502**				
C-10 / C-10 Suburban	85 / 86	**PD/774**				
C-14	64 / 78	**2006-T**	Bendix	**2006-T**	Bendix	
C-14	09-80 / 85	**PD/19-C**	Bendix	**2006-T**	Bendix	4 e 6 Cil.
C-15	64 / 78	**2006-T**	Bendix	**2006-T**	Bendix	
C-15	87 / 90	**PD/547**				
C-15	91 / 99	**PD/502**				

MODEL / *MODELO*	YEAR - *AÑO*	FRONT *DELANTERA*	SYSTEM *SISTEMA*	REAR *TRASERA*	SYSTEM *SISTEMA*	OBS.
GENERAL MOTORS						
C-15	99 / 04	**PD/133**		**PD/574**		
C-15	00 / 04	**PD/572**		**PD/574**		
C-15 SIERRA	07 /	**PD/594**		**PD/731**		
C-15 SILVERADO	02 / 04	**PD/572**		**PD/574**		
C-15 SILVERADO	05 / 06	**PD/594**		**PD/574**		
C-15 SILVERADO	07 / 09	**PD/594**		**PD/731**		
C-1500	92 / 00	**PD/502**				
C-20	85 / 93	**PD/19-C**	Bendix	**2080-T**	Bendix	4 e 6 Cil.
C-20	93 / 94	**PD/105**	Bendix	**CB/52**		4 e 6 Cil.
C-20	94 / 97	**PD/106**	Bendix	**CB/52**		
C-20	79 / 84	**PD/1001**				
C-20	85 / 87	**PD/324**				
C-20	88 / 00	**PD/502**				
C-20	00 / 04	**PD/572**		**PD/574**		
C-20	05 / 06	**PD/594**		**PD/574**		
C-20 / C-20 Suburban	85 / 86	**PD/774**				
C-20 USA	88 / 94	**PD/548**				
C-2500 CHEYENNE	92 / 94	**PD/548**				
C-2500 CHEYENNE	95 / 98	**PD/502**				
C-30	69 / 77	**2073**		**2042**		
C-30	73 / 87	**PD/541**				
C-30	80 / 91	**PD/324**				
C-30	91 / 93	**PD/552**				
C-35	90 / 00	**PD/552**				
C-35	01 / 06	**PD/571**		**PD/746**		
C-35	96 / 06	**PD/133**		**PD/133**		
C-35 DRW	94 / 95	**PD/541**		**PD/541**		
C-3500 CHEYENNE	94 / 00	**PD/548**				
C-3500 HD	01 /	**PD/571**		**PD/746**		
C-40	85 / 96	**PD/103**	Teves	**FD/72**	Bendix	
C-60	64 / 71	**2039**		**CB/36**		
C-60	81 / 85	**VW/256**	Bendix	**VW/257**	Bendix	Est. 2095
C-60	72 / 79	**FD/74**	Bendix	**FD/75**	Bendix	Est. 2095
C-60	80 / 81	**FD/82**	Bendix	**FD/75**	Bendix	Est. 2095
C-60	70 / 78	**MB/141**		**MB/142**		Freno a aire
CAMARO Z-28	95 / 97	**PD/697**				
CAMARO Z-28	98 / 02	**PD/713**				
CAMINHÃO SÉRIE 6403	60 / 64	**2039**		**2032**		
CAMINHÃO SÉRIE 6503	60 / 64	**2039**		**2032**		
CAPRICE	77 / 82	**PD/324**				
CAPRICE	90 / 96	**PD/774**				
CAPRICE Except Sta. Wagon	85 / 89	**PD/774**				
CAPRICE Station Wagon	85 / 96	**PD/774**				
CAPTIVA 2.4 4X2	09 /	**PD/711**	Mando	**PD/715**	Akebono	Freio de mão **CB/177-CP**
CAPTIVA 3.6 4X2	09 /	**PD/711**	Mando	**PD/715**	Akebono	Freio de mão **CB/177-CP**
CAPTIVA 3.6 4X4	09 /	**PD/711**	Mando	**PD/715**	Akebono	Freio de mão **CB/177-CP**
CARAVAN	75 / 76	**PD/7**	Varga	**855**	Varga	
CARAVAN	77 / 92	**PD/8**	Varga	**855**	Varga	
CARAVAN	79 / 92	**PD/11**	Teves	**855**	Varga	
CARAVAN	80 / 83	**PD/8** **PD/11**	Varga Teves	**CB/48**	Bendix	
CAVALIER	95 / 05	**PD/508**				
CAVALIER	95 / 04	**PD/506**				
CAVALIER 2.2L / 2.4L	92 / 94	**PD/506**				

MODEL / *MODELO*	YEAR - *AÑO*	FRONT *DELANTERA*	SYSTEM *SISTEMA*	REAR *TRASERA*	SYSTEM *SISTEMA*	OBS.
GENERAL MOTORS						
CAVALIER 2.8L / 3.1L	90 / 91	**PD/546**				
CAVALIER Z-24	91 /	**PD/546**				
CAVALIER Z-24	92 / 95	**PD/506**				
CELEBRITY	81 / 89	**PD/540**				
CELEBRITY	82 / 89	**PD/546**				
CELTA 1.0	00 / 11-09	**PD/42**	Teves	**FD/61-S/F FD/61-CPA**	Varga	
CELTA 1.0	12-09 /	**PD/82**	Teves	**FD/61-S/F FD/61-CPA**	Varga	
CELTA 1.4	00 / 11-09	**PD/42**	Teves	**FD/61-S/F FD/61-CPA**	Varga	
CELTA 1.4	12-09 /	**PD/82**	Teves	**FD/61-S/F FD/61-CPA**	Varga	
CENTURY	83 / 87	**PD/540**				
CENTURY	88 / 96	**PD/499**				
CHEVELLE	71 / 75	**PD/324**				
CHEVETTE	73 / 74	**CB/42**		**CB/43**		
CHEVETTE	73 / 78	**PD/6**	Teves	**CB/43**		
CHEVETTE	79 / 85	**PD/6**	Teves	**CB/47**		
CHEVETTE	79 / 93	**PD/6**	Teves	**CB/40**	Varga	
CHEVETTE JUNIOR	92 / 93	**PD/6**	Teves	**CB/40**	Varga	
CHEVY	12 /	**PD/82**	Teves			
CHEVY 1.4L / 1.6L	94 / 03	**PD/42**				
CHEVY- SS	68 / 73	**2066 S/F**		**2012-B 2012-BT**		
CHEVY- SS	74 / 76	**PD/9**	Varga	**2012-B 2012-BT**		
CHEVY- SS	77 / 78	**PD/9**	Varga	**8020**		
CHEVY C2	04 /	**PD/42**				
CHEVY GUAYIN 1.6L	00 / 03	**PD/42**				
CHEVY NOVA	73 / 79	**PD/324**				
CHEVY PICK UP	99 / 03	**PD/54**				
CHEVY SEDAN C2	04 /	**PD/42**				
CHEVY-4	76 / 78	**2006-T**	Bendix	**2006-T**	Bendix	
CHEVY-500	83 / 85	**PD/6**	Teves	**CB/47**		
CHEVY-500	83 / 93	**PD/6**	Teves	**CB/40**	Varga	
CITATION	80 / 86	**PD/546**				
CITATION	81 / 86	**PD/540**				
CITATION X-11	83 / 85	**PD/540**				
CLASSIC	04 / 05	**PD/772**				
COBALT LS 1.4 8V	12 /	**PD/94**	Teves			sem ABS
COBALT LT 1.4 8V	12 /	**PD/94**	Teves			sem ABS
COBALT LT 1.8 8V	12 /	**PD/94**	Teves			sem ABS
COBALT LTZ 1.4 8V	12 /	**PD/94**	Teves			sem ABS
COBALT LTZ 1.8 8V	12 /	**PD/94**	Teves			sem ABS
COBALT LS 1.4 8V	12 /	**PD/1347**	Kadac			com ABS
COBALT LT 1.4 8V	12 /	**PD/1347**	Kadac			com ABS
COBALT LTZ 1.4 8V	12 /	**PD/1347**	Kadac			com ABS
COLORADO	04 / 08	**PD/801**				
COMODORO	75 / 76	**PD/7**	Varga	**855**	Varga	
COMODORO	77 / 92	**PD/8**	Varga	**855**	Varga	
COMODORO	79 / 92	**PD/11**	Teves	**855**	Varga	
COMODORO	80 / 83	**PD/8 PD/11**	Varga Teves	**CB/48**	Bendix	
CORSA (Opel)	/ 91	**PD/431**	GM			
CORSA 1.0	94 / 00	**PD/42**	Teves	**CB/49 CB/49-CPA**	Varga	

MODEL / *MODELO*	YEAR - *AÑO*	FRONT *DELANTERA*	SYSTEM *SISTEMA*	REAR *TRASERA*	SYSTEM *SISTEMA*	OBS.
GENERAL MOTORS						
CORSA 1.0	01 /	**PD/54**	Teves	**CB/55**		
CORSA 1.0	96 / 00	**PD/54**	Varga	**CB/49** **CB/49-CPA**	Varga	
CORSA 1.0	01 / 11-09	**PD/42**	Teves	**CB/55**		
CORSA 1.0	12-09 /	**PD/82**	Teves	**CB/55**		
CORSA 1.0	02 /	**PD/46**	TRW	**CB/46-CP**		
CORSA 1.0 (Novo)	02 /	**PD/46**	TRW	**CB/49** **CB/49-CPA**	Varga	
CORSA 1.4	94 / 11-09	**PD/42**	Teves	**CB/49** **CB/49-CPA**	Varga	
CORSA 1.4	12-09 /	**PD/82**	Teves	**CB/49** **CB/49-CPA**	Varga	
CORSA 1.4	96 / 99	**PD/54**	Varga	**CB/49** **CB/49-CPA**	Varga	
CORSA 1.6	94 / 11-09	**PD/42**	Teves	**CB/49** **CB/49-CPA**	Varga	
CORSA 1.6	12-09 /	**PD/82**	Teves	**CB/49** **CB/49-CPA**	Varga	
CORSA 1.6	96 / 00	**PD/54**	Varga	**CB/49** **CB/49-CPA**	Varga	
CORSA 1.6	01 / 02	**PD/42** **PD/54**	Teves Varga	**CB/55**		
CORSA 1.8 (Novo)	02 /	**PD/46**	TRW	**CB/49** **CB/49-CPA**	Varga	
CORSA CLASSIC	02 / 11-09	**PD/42**	Teves	**CB/49** **CB/49-CPA**	Varga	
CORSA CLASSIC	12-09 /	**PD/82**	Teves	**CB/49** **CB/49-CPA**	Varga	
CORSA HATCHBACK	01 / 09	**PD/46**				
CORSA II 1.0	02 /	**PD/46**	Varga	**CB/49** **CB/49-CPA**	Varga	
CORSA II 1.8	02 /	**PD/46**	Varga	**CB/49** **CB/49-CPA**	Varga	
CORSA PICK-UP 1.6	95 / 11-09	**PD/42**	Teves	**CB/41**	Teves	
CORSA PICK-UP 1.6	12-09 /	**PD/82**	Teves	**CB/41**	Teves	
CORSA PICK-UP 1.6	96 /	**PD/54**	Varga	**CB/41**	Teves	
CORSA SEDAN	02 / 06	**PD/46**				
CORSICA	96 /	**PD/508**				
CORVETTE	91 / 96	**PD/1032**				
CRUZE LT 1.8 16V	12 /	**PD/1101**	Bosch	**PD/1102**	Bosch	
CRUZE LTZ 1.8 16V	12 /	**PD/1101**	Bosch	**PD/1102**	Bosch	
CUTLASS	87 / 90	**PD/540**				
CUTLASS	91 / 96	**PD/499**				
D-10	79 / 08-80	**PD/19-C**	Bendix	**2006-T**	Bendix	
D-10	85 / 94	**PD/19-C**	Bendix	**2080-T**	Bendix	4 e 6 Cil.
D-11.000	85 / 87	**VW/256**	Bendix	**VW/257**	Bendix	
D-11.000	85 / 96	**CB/53**	Bendix	**CB/54**	Bendix	
D-12.000	87 / 96	**VW/256** **CB/53**	Bendix	**VW/257** **CB/54**	Bendix	
D-13.000	85 / 87	**CB/53**	Bendix	**CB/54**	Bendix	
D-14	09-80 / 85	**PD/19-C**	Bendix	**2006-T**	Bendix	4 Cil.
D-14.000	87 / 96	**CB/53**	Bendix	**CB/54**	Bendix	
D-15	09-80 / 85	**PD/19-C**	Bendix	**2006-T**	Bendix	4 Cil.
D-19.000	85 / 90	**CB/53**	Bendix	**CB/54**	Bendix	3° eixo CB/54
D-20	85 / 93	**PD/19-C**	Bendix	**2080-T**	Bendix	4 e 6 Cil.
D-20	93 / 94	**PD/105**	Bendix	**CB/52**		4 e 6 Cil.
D-20	94 / 97	**PD/106**	Bendix	**CB/52**		
D-20	93 / 96			**CB/57-CP**		Freio traseiro Ø330,2x65,0mm
D-21.000	86 / 90	**CB/53**	Bendix	**CB/54**	Bendix	3° eixo CB/54
D-22.000	85 / 90	**CB/53**	Bendix	**CB/54**	Bendix	3° eixo CB/54

MODEL / *MODELO*	YEAR - *AÑO*	FRONT *DELANTERA*	SYSTEM *SISTEMA*	REAR *TRASERA*	SYSTEM *SISTEMA*	OBS.
GENERAL MOTORS						
D-40	85 / 96	**PD/103**	Teves	**FD/72**	Bendix	
D-60	64 / 71	**2039**		**CB/36**		
D-60	81 / 85	**VW/256**	Bendix	**VW/257**	Bendix	Est. 2095
D-60	72 / 79	**FD/74**	Bendix	**FD/75**	Bendix	Est. 2095
D-60	80 / 81	**FD/82**	Bendix	**FD/75**	Bendix	Est. 2095
D-70	70 / 85	**659-B**		**4514-F**	Bendix	Est. 2095
D-70	76 / 85	**659-B**		**4514-F**	Bendix	Est. 2095
D-70	85	**CB/53**	Bendix	**CB/54**	Bendix	
D-70	70 / 85			**4514-G**	Bendix	Freno hidráulico
D-70 (Detroit Diesel)	76 / 85			**4514-G**		
D-80	82 / 85	**659-B**		**4514-F**	Bendix	Est. 2095
D-80	85	**CB/53**	Bendix	**CB/54**	Bendix	
D-80 (Diesel Perkins)	82 / 85			**4514-G**	Bendix	Freno hidráulico
D-80 (Diesel Perkins)		**CB/53**	Bendix	**CB/54**	Bendix	Freno a aire
DIPLOMATA	77 / 92	**PD/8**	Varga	**855**	Varga	
DIPLOMATA	79 / 92	**PD/11**	Teves	**855**	Varga	
DIPLOMATA	80 / 83	**PD/8** **PD/11**	Varga Teves	**CB/48**	Bendix	
EIGHTY EIGHT	92 / 92	**PD/609**				
EIGHTY EIGHT	94 / 95	**PD/697**				
EPICA	09 / 10			**PD/1065**		
EQUINOX	07 / 08	**PD/711**		**PD/715**		
EXPRESS 1.0	/ 98			**RN/215-CP**		Freio traseiro Ø180,0x42,0mm
EXPRESS 1.4	/ 98			**RN/216-CP**		Freio traseiro Ø203,0x39,0mm
EXPRESS 1.6	/ 98			**RN/216-CP**		Freio traseiro Ø203,0x39,0mm
EXPRESS 1500	03 /	**PD/572**				
EXPRESS 2.0	/ 98			**RN/216-CP**		Freio traseiro Ø203,0x39,0mm
EXPRESS 2500	03 /	**PD/572**				
EXPRESS 2500	03 /	**PD/571**				
EXPRESS 3500	03 /	**PD/571**				
EXPRESS CARGO VAN 1500	99 / 02	**PD/502**				
EXPRESS CARGO VAN 1500	03 / 06	**PD/572**		**PD/589**		
EXPRESS CARGO VAN 1500 USA	96 / 98	**PD/502**				
EXPRESS CARGO VAN 250	03 / 06	**PD/571**		**PD/589**		
EXPRESS CARGO VAN 250	03 / 06	**PD/572**		**PD/1015**		
EXPRESS CARGO VAN 250 4X4 / 4X2	07 /	**PD/594**		**PD/731**		
EXPRESS CARGO VAN 250 Exc PBV 3266 Kg	97 / 02	**PD/548**				
EXPRESS CARGO VAN 250 PBV 3266 Kg	97 / 02	**PD/502**				
EXPRESS CARGO VAN 2500	96 / 00	**PD/548**				
EXPRESS CARGO VAN 2500	01 / 02	**PD/552**				
EXPRESS CARGO VAN 2500	03 / 05	**PD/571**		**PD/589**		
EXPRESS CARGO VAN 2500	06 / 08	**PD/571**		**PD/589**		
G-10	85 / 89	**PD/774**				
G-10	94 / 95	**PD/774**				
G-20	85 / 95	**PD/774**				
G-20	76 / 94	**PD/324**				
G-30	97 / 00	**PD/552**				
GRAND VITARA	00 /	**PD/432**	Sumitomo			
HHR	06 / 09	**PD/815**		**PD/766**		
IMPALA	85	**PD/774**				
IMPALA	06 / 10	**PD/814**		**PD/677**		
IMPALA	71 / 78	**PD/324**				
IMPALA	01 / 03	**PD/564**		**PD/677**		
IMPALA POLICE	06 / 10	**PD/814**		**PD/677**		

MODEL / *MODELO*	YEAR - *AÑO*	FRONT *DELANTERA*	SYSTEM *SISTEMA*	REAR *TRASERA*	SYSTEM *SISTEMA*	OBS.
GENERAL MOTORS						
IPANEMA 1.8	90 / 93	**PD/22 PD/22-B**	Varga	**CB/40**	Varga	
IPANEMA 1.8	93 / 96	**PD/22 PD/22-B**	Varga	**CB/41**	Teves	
IPANEMA 1.8	96 / 97	**PD/54**	Varga	**CB/41**	Teves	
IPANEMA 1.8 / 2.0	93 / 96	**PD/22 PD/22-B**	Varga	**CB/41**	Bosch	
IPANEMA 2.0	90 / 93	**PD/22 PD/22-B**	Varga	**CB/40**	Varga	
IPANEMA 2.0	93 / 96	**PD/22 PD/22-B**	Varga	**CB/41**	Teves	
IPANEMA 2.0	96 / 97	**PD/54**	Varga	**CB/41**	Teves	
K-10 / K-10 Suburban	85 / 86	**PD/774**				
K-20 / 25 4X4 USA	98 / 00	**PD/502**				
K-20 / K-20 Suburban	85 / 86	**PD/774**				
K-30 / 35 4X4 USA	98 / 00	**PD/548**				
K-5 Blazer	85 / 86	**PD/774**				
KADDET (Opel)	/ 91	**PD/431**	GM			
KADETT 1.8	89 / 93	**PD/22 PD/22-B**	Varga	**CB/40**	Varga	
KADETT 1.8	93 / 96	**PD/22 PD/22-B**	Varga	**CB/41**	Teves	
KADETT 1.8	96 / 97	**PD/54**	Varga	**CB/41**	Teves	
KADETT 2.0	96 / 98	**PD/54**	Varga	**CB/41**	Teves	
KADETT GSI	92 / 95	**PD/22 PD/22-B**	Varga	**PD/50**	Varga	
KODIAK	92 / 01	**PD/127**		**PD/127**		
KODIAK	97 / 02	**PD/126**		**PD/126**		
KODIAK C 4500	03 / 05	**PD/177**		**PD/177**		
KODIAK C 5500	03 / 04	**PD/177**		**PD/177**		
KODIAK C 6500	03 / 04	**PD/177**		**PD/177**		
LUMINA	95 / 96	**PD/519**				
LUMINA APV	95 / 96	**PD/697**				
LUV	97 / 06	**PD/357**				
LUV 1.6	89 / 99	**PD/357**	Akebono	**CB/37-S/F**		
LUV 2.0	89 / 99	**PD/357**	Akebono	**CB/37-S/F**		
LUV 2.3	89 / 99	**PD/357**	Akebono	**CB/37-S/F**		
MALIBU	70 / 78	**PD/324**				
MALIBU	00 / 03	**PD/714**				
MALIBU	98 / 03	**PD/772**				
MALIBU	79 / 81	**PD/540**				
MALIBU	97 / 04	**PD/567**				
MALIBU	04 / 06	**PD/593**		**PD/766**		
MALIBU	06 / 09	**PD/815**		**PD/766**		
MARAJÓ	81 / 85	**PD/6**	Teves	**CB/47**		
MARAJÓ	81 / 89	**PD/6**	Teves	**CB/40**	Varga	
MAXICAB	91 / 93	**PD/517**				
MERIVA	03 / 07	**PD/77**				
MERIVA 1.4	10 /	**PD/84**	Teves	**CB/46-CP**	Bosch	Aro 14"
MERIVA 1.8	02 / 02-10	**PD/72**	Teves	**PD/38**	Teves	Freio de mão **CB/175-CP**
MERIVA 1.8	02 / 03-10	**PD/77**	Teves	**CB/46-CP**	Bosch	Aro 14"
MERIVA 1.8	04-10 /	**PD/84**	Teves	**CB/46-CP**	Bosch	Aro 14"
MERIVA 1.8	03-10 /	**PD/93**	Teves	**PD/38**	Teves	Freio de mão **CB/175-CP**
MERIVA 1.4 (Aro 15)	02 / 02-10	**PD/72**	Teves	**PD/38**	Teves	Freio de mão **CB/175-CP**
MERIVA Joy 1.4 8V (Aro 15)	02 / 02-10	**PD/72**	Teves	**PD/38**	Teves	Freio de mão **CB/175-CP**
MERIVA Maxx 1.4 8V (Aro 15)	02 / 02-10	**PD/72**	Teves	**PD/38**	Teves	Freio de mão **CB/175-CP**
MINIBUS	01 / 02	**PD/624**				

MODEL / *MODELO*	YEAR - *AÑO*	FRONT *DELANTERA*	SYSTEM *SISTEMA*	REAR *TRASERA*	SYSTEM *SISTEMA*	OBS.
GENERAL MOTORS						
MONTANA 1.4 8V ARENA	10 / 10	**PD/46**	TRW	**CB/46-CP**	Bosch	
MONTANA 1.4 8V COMBO	08 / 10	**PD/46**	TRW	**CB/46-CP**	Bosch	
MONTANA 1.4 8V CONQUEST	08 / 10	**PD/46**	TRW	**CB/46-CP**	Bosch	
MONTANA 1.4 8V SPORT	10 / 10	**PD/46**	TRW	**CB/46-CP**	Bosch	
MONTANA 1.8	03 /	**PD/46**	TRW	**CB/46-CP**	Bosch	
MONTANA LS 1.4 8V	10 /	**PD/82**	Teves			
MONTANA SPORT 1.4 8V	10 /	**PD/82**	Teves			
MONTECARLO	06 / 07	**PD/814**		**PD/677**		
MONTECARLO	81 / 84	**PD/517**				
MONTECARLO 5.7L	81 / 84	**PD/540**				
MONTECARLO POLICE	06	**PD/814**		**PD/677**		
MONZA 1.6	82 / 86	**PD/22 PD/22-B**	Varga	**CB/40**	Varga	
MONZA 1.8	84 / 93	**PD/22 PD/22-B**	Varga	**CB/40**	Varga	
MONZA 1.8	93 / 94	**PD/22 PD/22-B**	Varga	**CB/41**	Teves	
MONZA 2.0	86 / 93	**PD/22 PD/22-B**	Varga	**CB/40**	Varga	
MONZA 2.0	93 / 96	**PD/22 PD/22-B**	Varga	**CB/41**	Teves	
MONZA 2.0 EFI	92 / 96	**PD/22 PD/22-B**	Varga	**PD/50**	Varga	
OMEGA (Opel)	/ 89	**PD/431**	GM			
OMEGA CD 3.0	92 / 95	**PD/40**	Varga	**PD/38**	Teves	Freio de mão **CB/175-CP**
OMEGA CD 3.8 V6 (Australiano)	99 /	**PD/436**	Girling	**PD/437**	Girling	
OMEGA CD 4.1	94 / 98	**PD/40**	Varga	**PD/38**	Teves	Freio de mão **CB/175-CP**
OMEGA GL 2.0	93 / 95	**PD/37**	Teves	**PD/38**	Teves	Freio de mão **CB/175-CP**
OMEGA GL 2.2	94 / 95	**PD/37**	Teves	**PD/38**	Teves	Freio de mão **CB/175-CP**
OMEGA GLS 2.0	92 / 95	**PD/37**	Teves	**PD/38**	Teves	Freio de mão **CB/175-CP**
OMEGA GLS 2.2	94 / 95	**PD/37**	Teves	**PD/38**	Teves	Freio de mão **CB/175-CP**
OMEGA GLS 2.2	95 / 98	**PD/52**	Teves	**PD/38**	Teves	Freio de mão **CB/175-CP**
OMEGA V6 3.6	06 /	**PD/436**	Girling			
ONIX LT 1.0 8V	12 /	**PD/94**	Teves			
ONIX LT 1.4 8V	12 /	**PD/94**	Teves			
ONIX LTZ 1.4 8V	12 /	**PD/94**	Teves			
ONIX LZ 1.0 8V	12 /	**PD/94**	Teves			
OPALA	69 / 73	**CB/39**		**CB/38**		4 e 6 Cil.
OPALA	73 / 76	**PD/7**	Varga	**855**	Varga	
OPALA	77 / 92	**PD/8**	Varga	**855**	Varga	
OPALA	79 / 92	**PD/11**	Teves	**855**	Varga	
OPALA	80 / 83	**PD/8 PD/11**	Varga Teves	**CB/48**	Bendix	
OPEL K-180	76 / 78	**PD/307**	Bendix	**8027**		
OPTRA	04 /	**PD/817**	Akebono			
OPTRA	06 /	**PD/475**		**PD/681**		
P-20	85 / 89	**PD/774**				
P-30	92 / 94	**PD/552**				
P-30	88 / 95	**PD/541**				
P-30	97 / 03	**PD/541**				
PICK UP - SÉRIE 3100	56 / 63	**2006**				
PICK-UP A-14	79 / 85	**PD/19-C**	Bendix	**2080-T**	Bendix	
PICK-UP A-20	93 / 94	**PD/105**	Bendix	**CB/52**	Bosch	4 y 6 Cilindros
PICK-UP A-20	94 / 97	**PD/106**	Bendix	**CB/52**	Bosch	4 y 6 Cilindros
PICK-UP C-10 Diesel	69 / 77	**2006-RA**	Bendix	**2006-RA**	Bendix	
PICK-UP C-10 Sevel	86 /	**PD/324**		**2006-RA**	Bendix	

MODEL / *MODELO*	YEAR - *AÑO*	FRONT *DELANTERA*	SYSTEM *SISTEMA*	REAR *TRASERA*	SYSTEM *SISTEMA*	OBS.
GENERAL MOTORS						
PICK-UP C-10 / 1000	79 / 85	**PD/19-C**	Bendix	**2080-T**	Bendix	
PICK-UP C-14	79 / 85	**PD/19-C**	Bendix	**2080-T**	Bendix	
PICK-UP C-14 / 1000	79 / 85	**PD/19-C**	Bendix	**2080-T**	Bendix	
PICK-UP C-15	79 / 85	**PD/19-C**	Bendix	**2080-T**	Bendix	
PICK-UP C-15 / 1000	79 / 85	**PD/19-C**	Bendix	**2080-T**	Bendix	
PICK-UP C-20	93 / 94	**PD/105**	Bendix	**CB/52**	Bosch	4 y 6 Cilindros
PICK-UP C-20	94 / 97	**PD/106**	Bendix	**CB/52**	Bosch	4 y 6 Cilindros
PICK-UP D-10 / 1000	79 / 85	**PD/19-C**	Bendix	**2080-T**	Bendix	
PICK-UP D-14 / 1000	79 / 85	**PD/19-C**	Bendix	**2080-T**	Bendix	
PICK-UP D-15 / 1000	79 / 85	**PD/19-C**	Bendix	**2080-T**	Bendix	
PICK-UP D-20	93 / 94	**PD/105**	Bendix	**CB/52**	Bosch	4 y 6 Cilindros
PICK-UP D-20	94 / 97	**PD/106**	Bendix	**CB/52**	Bosch	4 y 6 Cilindros
PICK-UP SILVERADO	82 / 87			**2006-RA**	Bendix	
PRISMA 1.4 8V	07 / 11-09	**PD/42**	Teves	**FD/61-S/F FD/61-CPA**	Varga	
PRISMA 1.4 8V	12-09 /	**PD/82**	Teves	**FD/61-S/F FD/61-CPA**	Varga	
PRISMA 1.0 / 1.4 LT	13 /	**PD/94**	Teves			
PRISMA 1.4 LTZ	13 /	**PD/94**	Teves			
PRIZM	97 / 00	**PD/712**				
PRIZM	01 / 02	**PD/712**				
R-10	87 / 91	**PD/774**				
R-10 Suburban	87 / 88	**PD/774**				
R-1500 Suburban	89	**PD/774**				
R-20 / R-20 Suburban	87 / 88	**PD/774**				
R-2500 / R-2500 Suburban	89	**PD/774**				
S10	90 / 01	**PD/517**				
S10	02 / 03	**PD/761**				
S10	04 /	**PD/776**		**PD/615**		
S10 4WD	00 / 04	**PD/776**		**PD/615**		
S10 4x2	95 /	**PD/107**	Varga	**CB/51 CB/51-CP**	Bosch	Roda 6 furos
S10 4x2	95 /	**PD/107**	Varga	**CB/132-CP**	Bendix	Roda 5 furos
S10 4x4	97 / 08-05	**PD/110**	Delphi	**CB/51 CB/51-CP**	Bosch	Roda 6 furos
S10 4x4	09-05 /	**PD/107**	Varga	**CB/51 CB/51-CP**	Bosch	Roda 6 furos
S10 (4 cil.)	95 /			**CB/132-CPA**		Freio traseiro Ø 279,4x52mm
S10 (6 cil.)	95 /			**CB/51-CPA**		Freio traseiro Ø 279,4x65mm
S-10 LS 4x2 2.4 FLEXPOWER	12 /	**PD/1433**	Teves	**MI/370-CP**	Akebono	Freio traseiro Ø 295,0x50mm
S-10 LS 4x2 2.8 TURBODIESEL	12 /	**PD/1433**	Teves	**MI/370-CP**	Akebono	Freio traseiro Ø 295,0x50mm
S-10 LS 4x4 2.8 TURBODIESEL	12 /	**PD/1433**	Teves	**MI/370-CP**	Akebono	Freio traseiro Ø 295,0x50mm
S-10 LT 4x2 2.4 FLEXPOWER	12 /	**PD/1433**	Teves	**MI/370-CP**	Akebono	Freio traseiro Ø 295,0x50mm
S-10 LT 4x2 2.8 TURBODIESEL	12 /	**PD/1433**	Teves	**MI/370-CP**	Akebono	Freio traseiro Ø 295,0x50mm
S-10 LT 4x4 2.8 TURBODIESEL	12 /	**PD/1433**	Teves	**MI/370-CP**	Akebono	Freio traseiro Ø 295,0x50mm
S-10 LTZ 4x2 2.4 FLEXPOWER	12 /	**PD/1433**	Teves	**MI/370-CP**	Akebono	Freio traseiro Ø 295,0x50mm
S-10 LTZ 4x2 2.8 TURBODIESEL	12 /	**PD/1433**	Teves	**MI/370-CP**	Akebono	Freio traseiro Ø 295,0x50mm
S-10 LTZ 4x4 2.8 TURBODIESEL	12 /	**PD/1433**	Teves	**MI/370-CP**	Akebono	Freio traseiro Ø 295,0x50mm
SILHOUETTE	92 / 93	**PD/609**				
SILHOUETTE	94 / 95	**PD/697**				
SILVERADO	97 / 01			**CB/57-CP**		Freio traseiro Ø330,2x65,0mm
SILVERADO	97 / 99	**PD/106**	Bendix	**CB/52**	Bosch	
SILVERADO 1500	99 / 07	**PD/572**				Americana
SILVERADO 1500	04			**PD/760**		
SILVERADO 1500	01 /	**PD/571**				Americana
SILVERADO 1500	00 / 01	**PD/572**		**PD/572**		Americana

MODEL / *MODELO*	YEAR - *AÑO*	FRONT *DELANTERA*	SYSTEM *SISTEMA*	REAR *TRASERA*	SYSTEM *SISTEMA*	OBS.
GENERAL MOTORS						
SILVERADO 1500	95 / 98	**PD/502**				
SILVERADO 1500	99 / 04	**PD/572**		**PD/574**		
SILVERADO 1500	05 / 06	**PD/594**		**PD/574**		
SILVERADO 1500	07 /	**PD/572**		**PD/574**		
SILVERADO 1500	08 /	**PD/594**				
SILVERADO 1500 Crew/4 Wheel Steering	06			**PD/760**		
SILVERADO 1500 Extended Cab	05			**PD/760**		
SILVERADO 1500 HD	01 / 07	**PD/571**		**PD/572**		Americana
SILVERADO 1500 Hybrid/Crew Cab	06			**PD/760**		
SILVERADO 2500	99 / 04	**PD/571**		**PD/572**		Americana
SILVERADO 2500	95 / 98	**PD/502**				
SILVERADO 2500	00 / 04	**PD/572**		**PD/574**		
SILVERADO 2500	05 / 07	**PD/594**				
SILVERADO 2500 CABINA EXTENDIDA	05 / 06	**PD/594**		**PD/578**		
SILVERADO 2500 HD	01 /	**PD/571**		**PD/572**		Americana
SILVERADO 3500	01 / 04	**PD/571**				Americana
SILVERADO 3500	04 /	**PD/571**		**PD/572**		Americana
SILVERADO 3500	01 /	**PD/571**		**PD/571**		
SILVERADO 3500 HD - PBT 12000	07 /	**PD/571**				Americana
SILVERADO DLX Turbo 4.2	99 /	**PD/113**	Bosch	**CB/52**	Bosch	
SILVERADO SS	03 / 06	**PD/572**				Americana
SILVERADO STD	99 /	**PD/113**	Bosch	**CB/52**	Bosch	
SIVERADO HD Turbo	99 /	**PD/113**	Bosch	**CB/52**		
SONIC LT 1.6 16V	12 /	**PD/1347**	Kadac			
SONIC LTZ 1.6 16V	12 /	**PD/1347**	Kadac			
SONIC E.U.A.	12 /	**PD/1101**				
SONORA	00 / 03	**PD/572**		**PD/578**		
SONORA	05 /	**PD/572**		**PD/572**		
SONORA	06 /	**PD/572**		**PD/589**		
SONORA	06 /	**PD/572**		**PD/578**		
SONORA 5.3L	04 /	**PD/572**		**PD/589**		
SPARK (M300) 1.0 / 1.2	03-10 /	**PD/1364**				
SPIN LT 1.8 8V	12 /	**PD/1347**	Kadac			
SPIN LTZ 1.4 / 1.8 8V	12 /	**PD/1347**	Kadac			
SPARK 1.0	05-05 /	**PD/598**	Akebono			
SPARK 1.0	03-10 /	**PD/818**	Akebono			
SPARK 1.2	03-10 /	**PD/818**	Akebono			
SRR	04 / 05	**PD/737**		**PD/738**		
SUBURBAN	92 / 99	**PD/502**				
SUBURBAN	00 / 02	**PD/572**		**PD/578**		
SUBURBAN	03 / 06	**PD/572**		**PD/589**		
SUBURBAN	07 / 09	**PD/594**		**PD/589**		
SUBURBAN 5.7L	87 / 91	**PD/324**				
SUBURBAN 1500	00 / 06	**PD/572**		**PD/760**		
SUBURBAN 2500	00 /	**PD/571**		**PD/572**		
SUBURBAN K-10 4X4 USA	94 / 00	**PD/502**				
SUBURBAN K-20 4X4 USA	94 / 00	**PD/502**				
SUPREMA CD 3.0	93 / 95	**PD/40**	Varga	**PD/38**	Teves	
SUPREMA CD 4.1	94 / 97	**PD/40**	Varga	**PD/38**	Teves	
SUPREMA GL 2.0	93 / 94	**PD/37**	Teves	**PD/38**	Teves	
SUPREMA GLS 2.0	93 / 95	**PD/37**	Teves	**PD/38**	Teves	
SUPREMA GLS 2.2	94 / 95	**PD/37**	Teves	**PD/38**	Teves	
SUPREMA GLS 2.2	96 / 97	**PD/52**	Teves	**PD/38**	Teves	
SUPREMA GLS 4.1	94 / 97	**PD/40**	Varga	**PD/38**	Teves	

MODEL / *MODELO*	YEAR - *AÑO*	FRONT *DELANTERA*	SYSTEM *SISTEMA*	REAR *TRASERA*	SYSTEM *SISTEMA*	OBS.
GENERAL MOTORS						
TAHOE	00 / 06	**PD/572**				
TAHOE	03 / 06			**PD/760**		
TAHOE	07 / 09	**PD/594**		**PD/731**		
TAHOE		**PD/1353**				
TAHOE USA	97 / 99	**PD/502**				
TIGRA	99 /	**PD/42**				
TIGRA TWINTOP 1.3 CDTI	06-04 /			**PD/1395**		
TIGRA TWINTOP 1.4	06-04 /			**PD/1395**		
TIGRA TWINTOP 1.8	06-04 /			**PD/1395**		
TORNADO	04 / 10	**PD/46**	TRW			
TORNADO 1.8	11 /	**PD/82**	Teves			
TRACKER 4X2	99 / 07	**PD/419**				
TRACKER 4X4	99 / 07	**PD/419**				
TRACKER 5P 2.0 TD 4x4	01 /	**PD/432**	Sumitomo	**CB/176-CP**		
TRACKER CUATRO PUERTAS	98 /	**PD/419**				
TRACKER DOS PUERTAS	98 /	**PD/378**				
TRACKER GEO	93 / 95	**PD/378**				
TRACKER LTZ 1.8 ECOTEC	13 /	**PD/1101**				
TRAILBLAZER	02 / 05	**PD/737**		**PD/738**		
TRAILBLAZER	06 / 07	**PD/1024**		**PD/738**		
TRAILBLAZER LTZ 2.8 CDTi	12 /	**PD/1433**	Teves			
TRAILBLAZER LTZ 3.6 V6	12 /	**PD/1433**	Teves			
TRAX	13 /	**PD/1101**		**PD/1102**		
TRAVERSE SUV				**PD/738**		
UPLANDER	05 / 07	**PD/769**		**PD/810**		
V-10 / V-10 Suburban	87	**PD/774**				
V-10 Suburban	88	**PD/774**				
V-1500 Suburban	89	**PD/774**				
V-20 / V-20 Suburban	87	**PD/774**				
V-20 Suburban	88	**PD/774**				
V-2500 Suburban	89	**PD/774**				
VECTRA 2.2L	00 / 02	**PD/61**				
VECTRA (Opel)	/ 92	**PD/431**	GM			
VECTRA 2.2 GLS 16V	99 /	**PD/52**	Teves	**PD/38**	Teves	
VECTRA 2.4	06 / 02-10	**PD/72**	Teves	**PD/38**	Teves	Freio de mão **CB/175-CP**
VECTRA 2.4	03-10 /	**PD/93**	Teves	**PD/38**	Teves	Freio de mão **CB/175-CP**
VECTRA 2.5 CD 24V	99 /	**PD/61**	Teves	**PD/38**	Teves	
VECTRA CD 2.0	93 / 96	**PD/37**	Teves	**PD/41**	Teves	Freio de mão **CB/175-CP**
VECTRA CD 2.0	02 / 02-10	**PD/72**	Teves	**PD/38**	Teves	Freio de mão **CB/175-CP**
VECTRA CD 2.0	03-10 /	**PD/93**	Teves	**PD/38**	Teves	Freio de mão **CB/175-CP**
VECTRA CD 2.0 16V	96 / 99	**PD/61**	Teves	**PD/38**	Teves	Freio de mão **CB/175-CP**
VECTRA CD 2.2 16V	96 / 97	**PD/52**	Teves	**PD/38**	Teves	Freio de mão **CB/175-CP**
VECTRA CD 2.2 16V	98 /	**PD/61**	Teves	**PD/38**	Teves	Freio de mão **CB/175-CP**
VECTRA CD 2.2 16V (aro 15")	02 / 02-10	**PD/72**	Teves	**PD/38**	Teves	Freio de mão **CB/175-CP**
VECTRA CD 2.2 16V (aro 15")	03-10 /	**PD/93**	Teves	**PD/38**	Teves	Freio de mão **CB/175-CP**
VECTRA GL 2.0	97 /	**PD/52**	Teves	**PD/38**	Teves	Freio de mão **CB/175-CP**
VECTRA GL 2.0	97 /	**PD/52**	Teves	**CB/46-CP**	Bosch	
VECTRA GL 2.2	96 /	**PD/52**	Teves	**PD/38**	Teves	Freio de mão **CB/175-CP**
VECTRA GL 2.2	97 /	**PD/52**	Teves	**CB/46-CP**	Bosch	
VECTRA GLS 2.0	93 / 96	**PD/37**	Teves	**PD/41**	Teves	Freio de mão **CB/175-CP**
VECTRA GLS 2.0	97 /	**PD/52**	Teves	**PD/38**	Teves	Freio de mão **CB/175-CP**
VECTRA GLS 2.0	97 /	**PD/52**	Teves	**CB/46-CP**	Bosch	
VECTRA GLS 2.0	02 / 02-10	**PD/72**	Teves	**CB/46-CP**	Bosch	
VECTRA GLS 2.0	03-10 /	**PD/93**	Teves	**CB/46-CP**	Bosch	

MODEL / *MODELO*	YEAR - *AÑO*	FRONT *DELANTERA*	SYSTEM *SISTEMA*	REAR *TRASERA*	SYSTEM *SISTEMA*	OBS.
GENERAL MOTORS						
VECTRA GLS 2.2	93 / 96	**PD/37**	Teves	**PD/41**	Teves	Freio de mão **CB/175-CP**
VECTRA GLS 2.2	96 /	**PD/52**	Teves	**PD/38**	Teves	Freio de mão **CB/175-CP**
VECTRA GLS 2.2	97 /	**PD/52**	Teves	**CB/46-CP**	Bosch	
VECTRA GLS 2.2 16V	93 / 96	**PD/37**	Teves	**PD/41**	Teves	Freio de mão **CB/175-CP**
VECTRA GLS 2.2 16V	99 /	**PD/61**	Teves	**PD/38**	Teves	Freio de mão **CB/175-CP**
VECTRA GLS 2.2 16V	99 /	**PD/61**	Teves	**CB/46-CP**	Bosch	
VECTRA GSI 2.0 16V	93 / 96	**PD/37**	Teves	**PD/41**	Teves	Freio de mão **CB/175-CP**
VECTRA GT	07 / 02-10	**PD/72**	Teves	**PD/38**	Teves	Freio de mão **CB/175-CP**
VECTRA GT	03-10 /	**PD/93**	Teves	**PD/38**	Teves	Freio de mão **CB/175-CP**
VECTRA GTX	07 / 02-10	**PD/72**	Teves	**PD/38**	Teves	Freio de mão **CB/175-CP**
VECTRA GTX	03-10 /	**PD/93**	Teves	**PD/38**	Teves	Freio de mão **CB/175-CP**
VENTURE	97 / 04	**PD/564**				
VENTURE	98 / 01	**PD/564**		**PD/677**		
VENTURE	01 / 04	**PD/564**		**PD/677**		
VERANEIO	64 / 78	**2006-T**	Bendix	**2006-T**	Bendix	
VERANEIO	79 / 94	**PD/19-C**	Bendix	**2080-T**	Bendix	4 e 6 Cil.
VERANEIO	94 / 97	**PD/106**	Bendix	**CB/52**	Bendix	
VITA C	09-00 /			**PD/1395**		
W 3500	99 / 08	**PD/624**				
W 4500	00 / 07	**PD/624**				
W 4500	00 / 08	**PD/626**				
W 5500	06 / 07	**PD/624**				
W 5500 / HD	00 / 05	**PD/626**				
W4 SERIES	98 / 99	**PD/624**				
W4 SERIES	99 /	**PD/626**				
W4 SERIES S042	88 / 91	**PD/1004**				
YUKON	07 / 09	**PD/594**		**PD/731**		
ZAFIRA	02 / 08	**PD/72**		**PD/600**		
ZAFIRA 2.0 16V	01 / 02-10	**PD/72**	Teves	**PD/38**	Teves	Freio de mão **CB/175-CP**
ZAFIRA 2.0 16V	03-10 /	**PD/93**	Teves	**PD/38**	Teves	Freio de mão **CB/175-CP**
ZAFIRA 2.0 8V	01 / 02-10	**PD/72**	Teves	**PD/38**	Teves	Freio de mão **CB/175-CP**
ZAFIRA 2.0 8V	03-10 /	**PD/93**	Teves	**PD/38**	Teves	Freio de mão **CB/175-CP**
ZAFIRA 2.0 8V	02 / 12-09	**PD/77**	Teves			Aro 14"
ZAFIRA 2.0 8V	10 /	**PD/84**	Teves			Aro 14"
ZAFIRA 2.0 GL 8V	01 /	**PD/72**	Teves	**PD/477**	Bosch	
ZAFIRA 2.0 GLS 16V	01 /	**PD/72**	Teves	**PD/477**	Bosch	

GMC						
C-15 / C-1500 Pickup / C-15 / C-1500 Suburban	85 / 86	**PD/774**				
C-25 / C-2500 Pickup / C-25 / C-2500 Suburban	85 / 86	**PD/774**				
C-25 / C-2500 Suburban	85 / 86	**PD/606**				
C-4500 TOPKICK; (DIH PB)	03 / 07	**PD/144**				
C-4500 TOPKICK; (DIH PB)	03 / 09			**PD/178**		
C-5500 TOPKICK	08 /			**PD/144**		
C-5500 TOPKICK	02	**PD/144**				
C-5500 TOPKICK	03 / 05	**PD/144**		**PD/144**		
C-5500 TOPKICK; (DIH PB)	03 / 09			**PD/178**		
C-5500 TOPKICK; (DIH PB)	06 / 07	**PD/144**		**PD/144**		
C-6500 TOPKICK	09			**PD/144**		
C-6500 TOPKICK	03 / 08	**PD/144**		**PD/144**		
C-7500 TOPKICK	09			**PD/144**		
C-7500 TOPKICK	03 / 08	**PD/144**		**PD/144**		
C-SERIES TOPKICK	02			**PD/144**		
Custom Cruiser	90 / 92	**PD/774**				

MODEL / *MODELO*	YEAR - *AÑO*	FRONT *DELANTERA*	SYSTEM *SISTEMA*	REAR *TRASERA*	SYSTEM *SISTEMA*	OBS.
GMC						
G-1500	85 / 89	**PD/774**				
G-1500	94 / 95	**PD/774**				
G-2500	85 / 89	**PD/774**				
G-2500	94 / 95	**PD/774**				
G-3500	87 / 89	**PD/774**				
G-3500	85 / 96	**PD/606**				
GMC 12-170	97	**FD/86**	Master	**4707**	Master	
GMC 12-170	98 /	**FD/83**	Bendix	**FD/84**	Bendix	
GMC 14-190	97	**FD/86**	Master	**4707**	Master	
GMC 14-190	98 /	**FD/83**	Bendix	**FD/84**	Bendix	
GMC 15-190	97 / 98	**FD/86**	Master	**4707**	Master	
GMC 15-190	98 /	**FD/85**	Bendix	**FD/84**	Bendix	
GMC 16-220	97	**4524-B**	Master	**4707**	Master	
GMC 16-220	98 /	**FD/83**	Bendix	**FD/84**	Bendix	
GMC 6.000	93 / 96	**PD/103**	Teves	**FD/72**	Bendix	
GMC 6.100	96 / 01	**PD/103**	Teves	**FD/72**	Bendix	
GMC 6.150	96 / 01	**PD/103**	Teves	**FD/72**	Bendix	
GMC CAMION TOPKICK	92 / 94	**PD/127**	Bendix	**PD/127**	Bendix	
Grand Wagoneer	87 / 89	**PD/774**				
J-10 / J-20	85 / 86	**PD/774**				
JIMMY	85 / 89	**PD/774**				
K-15 / K-1500 Pickup / K-15 / K-1500 Suburban	85 / 86	**PD/774**				
K-25 / K-2500 Pickup / K-2500 Suburban	85 / 86	**PD/606**				
K-25 / K-2500 Pickup / K-25 / K-2500 Suburban	85 / 86	**PD/774**				
P-25 / P-2500 Van	85 / 89	**PD/774**				
P-25 / P-2500 Van	88 / 89	**PD/606**				
P-3500	90 / 93	**PD/606**				
R-1500	87 / 91	**PD/774**				
R-1500 Suburban	87 / 89	**PD/774**				
R-1500 Suburban	90 / 91	**PD/606**				
R-2500	88 / 91	**PD/606**				
R-2500 / R-2500 Suburban	87 / 89	**PD/774**				
R-2500 Suburban	87 / 91	**PD/606**				
R-3500	88 / 89	**PD/606**				
SAFARI	93 / 02	**PD/774**				
SAFARI	03 / 05	**PD/572**				
SAFARI M	89	**PD/774**				
SAFARI M Power	85 / 88	**PD/774**				
SAVANA 1500	03 /	**PD/572**				
SAVANA 2500	03 / 05	**PD/572**				
SAVANA 2500	03 /	**PD/571**				
SAVANA 3500	08			**PD/639**		
SAVANA 3500	03 /	**PD/571**				
SAVANA 3500 DRW	03 / 07			**PD/639**		
SAVANA 3500 GVW 10000 Cutaway / GVW 8600 Cutaway	09			**PD/639**		
SIERRA 1500	99 / 07	**PD/572**				
SIERRA 1500	04 / 05			**PD/760**		
SIERRA 1500	00 / 03	**PD/571**		**PD/572**		
SIERRA 1500 4WD / Crew Cab / Extended Cab	06			**PD/760**		
SIERRA 1500 HD	01 / 07	**PD/571**		**PD/572**		
SIERRA 2500	99 / 04	**PD/571**		**PD/572**		
SIERRA 2500 HD	01 /	**PD/571**		**PD/572**		
SIERRA 2500 HD	01 / 06	**PD/572**		**PD/572**		

MODEL / *MODELO*	YEAR - *AÑO*	FRONT *DELANTERA*	SYSTEM *SISTEMA*	REAR *TRASERA*	SYSTEM *SISTEMA*	OBS.
GMC						
SIERRA 3500	01 / 07	**PD/571**				
SIERRA 3500	04 /			**PD/572**		
SIERRA 3500 HD	07 /	**PD/571**				PBT 12000
SIERRA 3500 HD	07 /	**PD/571**		**PD/572**		PBT 9900
SIERRA 3500	05 / 07	**PD/571**		**PD/572**		
SIERRA C3	01	**PD/572**				
SIERRA DENALI	06 / 07			**PD/760**		
SIERRA DENALI	02 / 03	**PD/572**				
SIERRA DENALI	04 / 05	**PD/572**		**PD/572**		
SIERRA DENALI	06	**PD/572**				
T-6500	04 / 08	**PD/144**		**PD/144**		
T-7500	04 / 08	**PD/144**		**PD/144**		
TERRAIN	10 /			**PD/715**	Akebono	
T-SERIES	02			**PD/144**		
V-1500	87 / 91	**PD/774**				
V-1500 Suburban	90 / 91	**PD/606**				
V-1500 Suburban	87 / 89	**PD/774**				
V-2500 / V-2500 Suburban	88 / 91	**PD/606**				
V-2500 / V-2500 Suburban	87 / 89	**PD/774**				
W4500 FORWARD S042	88 / 90	**PD/1004**				
W4500 FORWARD S042	91	**PD/1004**				
YUKON	00 / 06	**PD/572**				
YUKON	04 / 06			**PD/760**		
YUKON DENALI	03 / 06			**PD/760**		
YUKON DENALI XL	03 / 06			**PD/760**		
YUKON XL 1500	00 / 06	**PD/572**		**PD/760**		
YUKON XL 2500	00 /	**PD/571**		**PD/572**		
GOLDEN DRAGON						
		F/ 803		**F/ 804**		
GORICA						
360 x 200,0 mm Jumbo				**19902/903 00**		
420 x 180,0 mm				**19032 00**		
GOLIVE						
CARRETA	79 /			**CA/32**	Master	3 eixos
CARRETA	79 /			**4515-C**		2 eixos
GOLIVE	79 /			**4515-G**		2 ejes
GOLIVE	79 /			**CA/32**		3 ejes
GOTTI						
CARRETA	68 / 99			**SV/223**		
CARRETA	00 /			**4710** **CA/33**	Master	
GRAHL						
3° EIXO	Todos			**4195-B**		
CARRETA	Todos			**SV/223** **SV/226**		
GROSSPAL						
TODOS		**PD/306**	Varga	**2137-RA**		
GUERRA						
3° EIXO	65 / 78			**4195-B**		

MODEL / *MODELO*	YEAR - *AÑO*	FRONT *DELANTERA*	SYSTEM *SISTEMA*	REAR *TRASERA*	SYSTEM *SISTEMA*	OBS.
GUERRA						
3° EIXO	79 / 93			**4514-F 4514-G 4515-C 4515-G CA/32**	Bendix - Master	
3° EIXO	93 /			**FD/88**	Master	
CARRETA	65 / 78			**SV/223 SV/226**		
CARRETA	79 / 99			**CA/32**	Master	
CARRETA	95 /			**FD/81**	Knorr	
CARRETA	00 /			**4710 CA/33**	Master	
GUERRA	00 /			**4718**		
GURGEL						
BR800	88 /	**PD/17**	Teves	**CB/40**	Varga	
CARAJÁS	Todos	**PD/13**	Teves	**VW/275**	VW	
G15	79 /	**VW/270**	VW	**VW/271**	VW	
G800	79 /	**VW/270**	VW	**VW/271**	VW	
ITAIPÚ	79 /	**VW/270**	VW	**VW/271**	VW	
TOCANTINS	Todos	**PD/13**	Teves	**VW/275**	VW	
X12	/ 80	**VW/262**	VW	**VW/262**	VW	
X12	81 /	**PD/5**	Teves	**VW/272**	VW	
X15	79 /	**VW/270**	VW	**VW/271**	VW	
XEF	81 /	**PD/5**	Teves	**VW/272**	VW	
HALDEX						
MK IV / MODULX - DB22 - 22.5" - with bump				**PD/170**	Haldex	
HALDEX DB 22LT,		**PD/213**		**PD/213**		
HANOMAG						
F 40	71 /	**15349/350 90**		**15349/350 90**		
HELVETICA						
HELVETICA	94 /			**AC/18**		8" Eje Dana-Armetal
HELVETICA	94 /			**4551**		8 5/8" Eje Propar
HELVETICA				**9051**		3 1/2"
HELVETICA				**9052**		5"
HELVETICA				**9251/4**		6"
HELVETICA				**9251/6**		6"
HELVETICA				**9251/8**		6"
HELVETICA				**9532**		8"
HELVETICA				**4644-A**		8" Eje Americano
HEULIEZ						
ACCESS'BUS	96 /	**PD/125**	Meritor			
HINO						
145	05 / 08	**PD/104**				
165	05 / 08	**PD/104**				
185	05 / 08	**PD/104**				
BC 144	89 /	**F/755**		**F/756**		
BG 100	78 / 83	**NN/60/1**				
BG 100	71 / 77			**NN/52/1**		
BX 321	80 / 84	**NN/60/1**		**F/784**		Bus
BY 320	77 / 78			**NN/61/1**		Bus
BY 320E	77 / 80	**NN/60/1**				

MODEL / *MODELO*	YEAR - *AÑO*	FRONT *DELANTERA*	SYSTEM *SISTEMA*	REAR *TRASERA*	SYSTEM *SISTEMA*	OBS.
HINO						
CG 277	84 /	**NN/60/1**		**NN/61/1**		
CN 275	88 /	**NN/60/1**		**NN/61/1**		Third axle NN/60/1
DUTRO 5.5T		**F/1090**		**F/1090**		
DUTRO 6.5T		**F/1093**		**F/1089**		
F 25-247	97 /	**F/935**		**F/936**		6 X 4
F 25-295	97 /	**F/935**		**F/936**		6 X 4
F 25-297	97 /	**F/935**		**F/936**		6 X 4
F 25-305	00 /	**F/935**		**F/936**		6 X 4
F 25-307	00 /	**F/935**		**F/936**		6 X 4
F 35-243	97 /	**F/935**		**F/936**		4 X 2
F 35-293	98 /	**F/935**		**F/936**		4 X 2
F 40-333	99 /	**F/935**		**F/936**		4 X 2
F 44-294	98 /	**F/935**		**F/936**		6 X 4
F 48-334	99 /	**F/935**		**F/936**		6 X 4
FC 144	85 / 93	**F/755**		**F/756**		
FC 146	85 / 93	**F/755**		**F/756**		
FC 3W Merlin	93 /	**F/755**		**F/756**		
FC Series 1017 / 1018		**F/1091**		**F/1092**		
FD 121-126 / 151-156 / 171-179	80 / 83	**F/755**		**F/756**		
FD 174	84 /	**F/755**		**F/756**		
FD 176	84 /	**F/755**		**F/756**		
FD 186	91 / 95	**F/781**		**F/782**		
FE 3H	94 / 96	**F/781**		**F/782**		
FF 13-122	83 /	**F/781**		**F/782**		4 x 2
FF 13-133	83 /	**F/781**		**F/782**		4 x 2
FF 13-135	83 /	**F/781**		**F/782**		4 x 2
FF 13-136	83 /	**F/781**		**F/782**		4 x 2
FF 13-176	88 /	**F/781**		**F/782**		4 x 2
FF 172	84 / 92	**F/781**		**F/782**		
FF 173	84 / 92	**F/781**		**F/782**		
FF 174	83 / 89	**F/781**		**F/782**		
FF 175	83 / 89	**F/781**		**F/782**		
FF 177	84 / 92	**F/781**		**F/782**		
FF 179	83 / 89	**F/781**		**F/782**		
FF 192	86 / 92	**F/781**		**F/782**		
FF 193	85 / 92	**F/781**		**F/782**		
FF 197	86 / 92	**F/781**		**F/782**		
FF 197K	85 / 92	**F/781**		**F/782**		
FF 217 GRIFFON	91 / 96	**F/783**		**F/784**		
FF 2H / 3H	89 /	**NN/60/1**		**F/784**		
FG 14-173	83 /	**F/781**		**F/782**		4 x 2
FG 14-177	83 /	**F/781**		**F/782**		4 x 2
FG 172	89 / 91	**NN/60/1**		**NN/61/1**		
FG 173	89 / 91	**NN/60/1**		**NN/61/1**		
FG 175	89 / 91	**NN/60/1**		**NN/61/1**		
FG 177	89 / 91	**NN/60/1**		**NN/61/1**		
FG 182 / 183 /184 / 185 /187 / 192 / 193 /194 /195 /197	80 / 83	**NN/60/1**				
FG 192	89 / 91	**F/783**		**F/784**		
FG 192 / 193 / 194 / 195 / 197	83 / 89			**F/784**		
FG 193	89 / 91	**F/783**		**F/784**		
FG 195	89 / 91	**F/783**		**F/784**		
FG 197	89 /	**NN/60/1**		**NN/61/1**		
FH 220-229 / 270 / 272 / 2K	81 / 90	**NN/60/1**		**NN/61/1**		

MODEL / *MODELO*	YEAR - *AÑO*	FRONT *DELANTERA*	SYSTEM *SISTEMA*	REAR *TRASERA*	SYSTEM *SISTEMA*	OBS.
HINO						
FM 1J				**F/935**		
FN	90 / 94	**NN/60/1**		**NN/61/1**		
FN 1F / FN 1K / FN 1P / FN 1V / FN 2F / FN 2K / FN 2P / FN 3F	90 / 94	**NN/60/1**		**NN/61/1**		
FN 1K / 1F / 2P / 2K / 3F / 4F	94 /			**F/936**		
FN 270-278 / 282-288 / 602-608 / 634-638	81 / 83	**NN/60/1**		**NN/61/1**		
FN 270-278 / 282-288 / 602-608 / 634-639	84 / 90	**NN/60/1**		**NN/61/1**		
FP 274-279 / 284 / 604-609	83 / 90	**NN/60/1**		**NN/60/1**		
FP 274-289	81 / 83	**NN/60/1**		**F/936**		Third axle NN/60/1
FR 1F / FR 1P / FR 2F / FR 2K / FR 3F	90 /	**NN/60/1**		**F/936**		Third axle NN/60/1
FR 1K / 2P / 3F / 4F	95 /			**F/936**		Third axle F/936
FR 270-279 / 284 / 339 / 600-609 / 630-639	83 / 90	**NN/60/1**		**F/936**		
FR 270-289 / 600-639	81 / 83	**NN/60/1**		**NN/60/1**		Third axle NN/60/1
FS 1F / 1K / 2F / 2K / 1V / 3F / 4F	92 /			**F/936**		Third axle F/936
FS 1F / 1V / 2F / 2K / 1V / 3F	90 /	**NN/60/1**		**NN/61/1**		Third axle NN/61/1
FS 1KLKD	94 / 97	**F/935**				
FS 270	85 /	**NN/60/1**		**NN/61/1**		
FS 270 Super Dolphin	84 / 95	**NN/60/1**		**NN/61/1**		Boogie Drive
FS 270-276 / 600-608 / 630-638	83 / 90	**NN/60/1**		**NN/61/1**		Third axle NN/61/1
FS 270-276 / 600-638	81 / 83	**NN/60/1**		**NN/61/1**		Third axle NN/61/1
FS 2KL Super Dolphin	94 / 96	**F/935**		**NN/61/1**		
FS 633 AA	83 /	**NN/60/1**		**NN/61/1**		Third axle NN/61/1
FT 175	85 /	**NN/60/1**		**NN/61/1**		
FT 1JGKA Ranger 5	97 / 03	**F/781**		**F/782**		
FT 3WFKA Kestrel	90 / 96	**F/781**		**F/782**		
FU 2F / 3F / 3F / 4F	90 /	**NN/60/1**		**NN/61/1**		Third axle NN/61/1
FU 633 (6WD)	82 / 83	**NN/60/1**		**NN/61/1**		Third axle NN/61/1
FU 633 / 634 (6WD)	84 / 90	**NN/60/1**		**NN/61/1**		Third axle NN/61/1
FW 1F / 1K / 2F / 2K / 3K	90 /	**NN/60/1**				
FW 274-279 / 286 / 604 / 606 / 609	84 / 90	**F/781**				
FY 666	87 / 90	**NN/60/1**		**NN/61/1**		
FZ 1F	90 /	**NN/60/1**		**NN/61/1**		Third axle NN/61/1
FZ 273 (4WD)	83 / 90	**NN/60/1**		**NN/61/1**		Third axle NN/61/1
GD 164	86 /	**F/781**		**F/782**		
GD 166	86 /	**F/781**		**F/782**		
GD 171-179	80 / 83	**F/755**		**F/756**		
GD 174	84 / 91	**F/781**		**F/782**		
GD 175	84 / 91	**F/781**		**F/782**		
GD 176	84 / 91	**F/781**		**F/782**		
GD 182	91 /	**F/781**		**F/782**		
GD 184	91 /	**F/781**		**F/782**		
GD 186	91 /	**F/781**		**F/782**		
GD 1J	96 / 03	**F/781**		**F/782**		
GD 3H	90 / 96	**F/781**		**F/782**		
GF 171	83 /	**F/781**		**F/782**		
GF 175	84 / 91	**F/781**		**F/782**		
GH	83 / 90			**F/936**		Brake 8 /5'
GH 183	91 /	**NN/60/1**		**NN/61/1**		
GH 185	91 /	**NN/60/1**		**NN/61/1**		
GH 187	91 /	**NN/60/1**		**NN/61/1**		
GH 237R	91 /	**NN/60/1**		**NN/61/1**		
GK 1H	89 /	**NN/60/1**				
GN 1F / 1P / 2K / 2P	90 /	**NN/60/1**		**NN/60/1**		
GN 1F / 2P / 2K	94 /					Third axle F/936

MODEL / *MODELO*	YEAR - *AÑO*	FRONT *DELANTERA*	SYSTEM *SISTEMA*	REAR *TRASERA*	SYSTEM *SISTEMA*	OBS.
HINO						
GN 272 / 274 / 282	81 / 83	**NN/60/1**		**NN/61/1**		
GN 272 / 274 / 282 / 284	83 / 90	**NN/60/1**		**NN/60/1**		
GS 221	86 / 93	**NN/60/1**		**NN/61/1**		Boogie Drive
GS 224	86 / 93	**NN/60/1**		**NN/61/1**		
GT 175 4X4	88 / 93	**F/781**		**F/782**		
GT 1J	88 / 96	**F/781**		**F/782**		
GT 3H	88 / 96	**F/781**		**F/782**		
HE 301 / 355	69 / 76			**NN/52/1**		
HE 336 / 366 / 526	76 / 83	**NN/60/1**		**NN/61/1**		
HH 131 / 341 / 541	76 / 83	**NN/60/1**		**NN/61/1**		Third axle NN/61/1
HH 131 / 341 / 541	76 / 83	**NN/60/1**		**NN/61/1**		
HK 340	71 / 73			**NN/52/1**		
HT 233 / 235 / 226 / 275 / 276	85 /	**NN/60/1**		**F/936**		Bus
HT 2ML / 3KL	91 /			**F/936**		Bus
HU 223 / 225 / 226 / 275 / 276	81 /	**NN/60/1**		**F/936**		Bus
HU 2ML / 3KL	91 /			**F/936**		Bus
KA 340	71 / 73			**NN/52/1**		
KA 340	73 / 75			**NN/61/1**		
KB 110-122 / 301-382 / 720 /721 /980	68 / 73			**NN/52/1**		
KB 113-122 / 303-394 / 500 / 501 / 720 / 721 / 980	73 / 80	**NN/60/1**		**NN/61/1**		
KF 300-390 / 702-792	68 / 73			**NN/52/1**		
KF 300-396 / 500-595 / 701-798	73 / 81	**NN/60/1**				Third axle NN/60/1
KG 175	83 /	**F/781**		**F/782**		
KH 120	71 / 75			**NN/52/1**		
KK 188 / 189 (Low-bed)	81 / 83	**NN/60/1**				
KK 196 / 198 / 199 (Low bed)	83 /	**NN/60/1**				
NS 270	85 /	**NN/60/1**		**NN/61/1**		Third axle NN/61/1
NU 275 (6WD)	82 /	**NN/60/1**		**NN/61/1**		Third axle NN/61/1
PROFIA 45-350	01 /	**F/935**		**F/936**		4 X 2
PROFIA 57-370	98 /	**F/935**		**F/936**		6 X 4
RC 300 / 301 / 320 / 321 / 381 / 701 /721	74 / 84	**NN/60/1**		**F/936**		Bus
RC 300 / 320	70 / 73			**NN/52/1**		Bus
RC 320	78 / 81	**NN/60/1**		**F/724**		Bus
RC 320PT	78 / 81	**NN/60/1**		**F/724**		Bus
RC 320PT	74 / 77			**NN/52/1**		Bus
RE 100 / 101 / 120 / 121 / 141	74 / 84	**NN/60/1**		**F/936**		Bus
RE 100 / 120 / 140	70 / 73			**NN/52/1**		Bus
RF 400 / 720	74 / 77	**NN/60/1**		**F/936**		Bus
RG 198	89 / 93	**NN/60/1**		**F/724**		
RK 172 / 174	84 /	**NN/60/1**		**F/784**		Bus
RK 172BA	84 /	**F/783**		**F/784**		BUS
RM 260		**F/935**				
RS 120 /121 /141 /160 /161 /320 /340 /360	77 / 84	**NN/60/1**				Bus
RT 223 / 225 / 226	81 / 85	**NN/60/1**				Bus
RT 223 / 225 / 236 / 275 / 276	85 /	**NN/60/1**		**F/936**		Bus
RU 1FN / 2FN / 1HH / 2FS / 3HJ / 3FS / 3FT / 4FS	91 /			**F/936**		Bus / third axle F/936
RU 606 / 608 / 636 / 637 / 638	85 /	**NN/60/1**		**F/936**		Bus
RU 606 / 608 / 636 / 638	83 / 85	**NN/60/1**				Bus
RV 530 / 540 / 550 / 730 / 750	72 / 74			**NN/52/1**		Bus
RV 730P	78 / 81	**NN/60/1**		**F/724**		
SG	73 / 90			**NN/61/1**		-
SH 1F / 2F / 3F / 1V / 2V	90 /	**NN/60/1**		**NN/61/1**		
SH 275 / 601 / 631 / 711	81 /	**NN/60/1**		**NN/61/1**		
SS 2F	83 / 90			**F/936**		Brake 8 /5'

MODEL / *MODELO*	YEAR - *AÑO*	FRONT *DELANTERA*	SYSTEM *SISTEMA*	REAR *TRASERA*	SYSTEM *SISTEMA*	OBS.
HINO						
SS 631 1V / 3F	84 /	**NN/60/1**		**NN/61/1**		Third axle NN/61/1
SS 631 / 711	81 / 84	**NN/60/1**		**NN/61/1**		Third axle NN/61/1
SUPER EAGLE	91 /	**NN/60/1**		**NN/61/1**		
TC 301-382 / 541-561 / 701-781 / 921	69 / 73			**NN/52/1**		
TC 302-383 / 541-585 / 701-783 / 921-942	73 / 81	**NN/60/1**		**NN/61/1**		
WD 300	77 / 80	**NN/60/1**		**NN/61/1**		
WG 140	76 /	**NN/60/1**		**NN/61/1**		Third axle NN/61/1
ZC 100 / 101 / 120 / 121	74 / 81	**NN/60/1**		**NN/61/1**		
ZC 101	85 /	**NN/60/1**		**NN/61/1**		
ZC 121	85 /	**NN/60/1**		**NN/61/1**		
ZH 100	73 / 75			**NN/52/1**		
ZH 110 / 120	75 / 77	**NN/60/1**		**NN/61/1**		
ZM	83 / 90			**F/936**		Brake 8 /5’
ZM 101	73 / 90			**NN/61/1**		-
ZM 102 / 103 / 301-362 / 500-580 / 703-785	73 / 81	**NN/60/1**		**NN/61/1**		Third axle NN/61/1
ZM 201	75 / 82			**NN/52/1**		
ZM 302E	85 /	**NN/60/1**		**NN/61/1**		
ZM 342E	85 /	**NN/60/1**		**NN/61/1**		

HONDA						
ACCORD	99 / 02	**PD/717**				
ACCORD	02 /	**PD/644**		**PD/554**		
ACCORD 1.8 ES	96 / 98	**PD/449**	Akebono	**PD/554**	Akebono	
ACCORD 1.8 EX	90 / 96			**PD/401**	Akebono	
ACCORD 1.8 EXR	90 / 96			**PD/401**	Akebono	
ACCORD 1.8 LS / LX / S	90 / 95	**PD/397**	Akebono			
ACCORD 1.9	96 / 98	**PD/388**	Akebono	**PD/554**	Akebono	
ACCORD 1.9	96 / 98	**PD/449**	Akebono	**PD/554**	Akebono	
ACCORD 2.0	93 / 98	**PD/388**	Akebono	**PD/554**	Akebono	
ACCORD 2.0	93 / 98	**PD/449**	Akebono	**PD/554**	Akebono	
ACCORD 2.0 16V EX	90 / 95	**PD/397**	Akebono	**PD/554**	Akebono	Con ABS
ACCORD 2.0 CB	89 /	**PD/388**	Akebono	**HO/333-CP**		
ACCORD 2.0 ES	96 / 98	**PD/449**	Akebono			
ACCORD 2.0 i 16V ES	90 / 95			**PD/554**	Akebono	
ACCORD 2.0 i 16V LS	90 / 95			**PD/554**	Akebono	
ACCORD 2.0 i 16V S	90 / 95			**PD/554**	Akebono	
ACCORD 2.0 Tdi	96 / 98	**PD/449**	Akebono			
ACCORD 2.0i 16V Coupe ES / LS	93 /			**PD/554**	Akebono	
ACCORD 2.0i 16V DX / LX	90 / 95	**PD/397**	Akebono			Con ABS
ACCORD 2.0i EX	/ 94			**PD/457**	Akebono	
ACCORD 2.0i EX Automatic / SW	90 /	**PD/397**	Akebono	**PD/554**	Akebono	
ACCORD 2.2	/ 95			**PD/554**	Akebono	
ACCORD 2.2	95 / 98	**PD/388**	Akebono	**PD/554**	Akebono	
ACCORD 2.2	/ 98	**PD/449**	Akebono	**PD/554**	Akebono	
ACCORD 2.2 i 16V EX / LX	93 /			**PD/554**	Akebono	
ACCORD 2.2i Vtec	96 / 98	**PD/449**	Akebono			
ACCORD 2.3	93 /	**PD/388**	Akebono			
ACCORD 2.3 ISR	/ 98	**PD/449**	Akebono	**PD/554**	Akebono	
ACCORD 2.3 ISR	93 / 98	**PD/388**	Akebono	**PD/554**	Akebono	
ACCORD 3.5 EX V6 24V	08 /	**PD/1388**				
ACCORD AERODECK 2.0	89 / 98	**PD/388**	Akebono	**PD/554**	Akebono	
ACCORD AERODECK 2.0 16V LSi	93 / 98	**PD/449**	Akebono			
ACCORD AERODECK 2.0i / 2.2 / 2.2i	92 / 98	**PD/388**	Akebono	**PD/554**	Akebono	
ACCORD AERODECK 2.0i / 2.2 / 2.2i 16V	90 / 93	**PD/449**	Akebono	**PD/554**	Akebono	

MODEL / *MODELO*	YEAR - *AÑO*	FRONT *DELANTERA*	SYSTEM *SISTEMA*	REAR *TRASERA*	SYSTEM *SISTEMA*	OBS.
HONDA						
ACCORD AERODECK 2.2	90 / 98			**PD/554**	Akebono	
ACCORD AERODECK 2.2 ES	93 / 98	**PD/449**	Akebono			
ACCORD AERODECK 2.2i	90 / 98			**PD/554**	Akebono	
ACCORD COUPÉ	93 / 98	**PD/717**				
ACCORD COUPÉ	94 / 99			**PD/554**		
ACCORD COUPÉ 2.0 16V	92 / 98	**PD/397**	Akebono			
ACCORD COUPÉ 2.0 16V	98 /	**PD/449**	Akebono			
ACCORD COUPÉ 3.0 V6 24V	98 /	**PD/449**	Akebono			
ACCORD CROSSTOUR AWD	11 /	**PD/1393**				
ACCORD EX	08 / 09	**PD/644**		**PD/1088**		
ACCORD EX 2.2L	96 / 97	**PD/397**				
ACCORD EX / EX-R 2.3L	98 / 02	**PD/563**		**PD/554**		
ACCORD EX 2.4L	03 / 07	**PD/644**		**PD/554**		
ACCORD IV 2.0 16V EX	90 / 95			**PD/554**	Akebono	
ACCORD IV 2.2	89 / 92			**PD/554**	Akebono	
ACCORD IV 2.2i 16V EX	89 / 92			**PD/554**	Akebono	
ACCORD IV 2.2i 16V LX	89 / 92			**PD/554**	Akebono	
ACCORD LX	08 /	**PD/1388**				
ACCORD V 2.0	95 / 98			**PD/554**	Akebono	
ACCORD V 2.2	95 / 98			**PD/554**	Akebono	
ACCORD V6	03 / 07	**PD/719**		**PD/554**		
ACCORD V6 COUPE	03 / 07	**PD/719**		**PD/554**		
ACCORD V6 COUPE TRANS AUT.	03 / 07	**PD/719**		**PD/554**		
ACCORD V6 EX 3.0L	98 / 02	**PD/449**		**PD/554**		
ACCORD V6 USA	94 / 97	**PD/449**		**PD/554**		
ACCORD VI 1.9	96 / 98			**PD/554**	Akebono	
ACCORD VI 2.0	96 / 98			**PD/554**	Akebono	
ACCORD VIII 2.0 I VTEC	03 /	**PD/1447**				
ACCORD VIII 2.2 I CDTI	03 /	**PD/1447**				
CITY 1.5L	09 / 10	**PD/685**	Teves	**PD/398**		
CITY DX 1.5 16V	09 /	**PD/685**	Teves	**PD/457**	Akebono	
CITY EX 1.5 16V	09 /	**PD/685**	Teves	**PD/457**	Akebono	
CITY LX 1.5 16V	09 /	**PD/685**	Teves	**PD/457**	Akebono	
CITY SPORT 1.5 16V	14 /	**PD/685**	Teves	**PD/457**	Akebono	
CITY DX / EX / LX 1.5 16V	09 /			**HO/334-CPA**		Freio traseiro Ø 191x34,5mm
CITY DX 1.5	14 /	**PD/1492**				
CITY EX 1.5	14 /	**PD/1492**				
CITY EXL 1.5	14 /	**PD/1492**				
CITY LX 1.5	14 /	**PD/1492**				
CIVIC	96 / 05	**PD/563**				
CIVIC	94 / 96	**PD/782**				
CIVIC	99 / 00	**PD/782**				
CIVIC	12 /	**PD/1404**				
CIVIC 1.3 16V	91 / 95	**PD/404**	Akebono	**HO/333-CP**		
CIVIC 1.3 DX	91 / 96	**PD/404**	Sumitomo	**PD/398**	Akebono	
CIVIC 1.3 EX	82 / 92	**PD/386**	Akebono	**HO/332-CP**	Akebono	
CIVIC 1.3 LS	82 / 92	**PD/386**	Akebono	**HO/332-CP**	Akebono	
CIVIC 1.4	95 / 96	**PD/394**	Girling	**PD/457**	Akebono	
CIVIC 1.4	98 /	**PD/394**	Girling			
CIVIC 1.4 16V GL / GLX / TG	/ 94	**PD/386**				
CIVIC 1.4 EX	82 / 92	**PD/386**	Akebono	**HO/332-CP**	Akebono	
CIVIC 1.4 Joker / Eco	96 /	**PD/404**	Sumitomo			
CIVIC 1.4 LS	82 / 92	**PD/386**	Akebono	**HO/332-CP**	Akebono	
CIVIC 1.4i	95 / 01	**PD/404**	Akebono	**HO/333-CP**		

MODEL / *MODELO*	YEAR - *AÑO*	FRONT *DELANTERA*	SYSTEM *SISTEMA*	REAR *TRASERA*	SYSTEM *SISTEMA*	OBS.
HONDA						
CIVIC 1.5	98 /	**PD/394**	Girling			
CIVIC 1.5 16V	91 / 95	**PD/404**	Akebono	**HO/333-CP**		
CIVIC 1.5 EX	82 / 92	**PD/386**	Akebono	**HO/332-CP**	Akebono	
CIVIC 1.5 LS	82 / 92	**PD/386**	Akebono	**HO/332-CP**	Akebono	
CIVIC 1.5 VEI Vtec	95 /	**PD/394**	Girling	**PD/457**	Akebono	
CIVIC 1.5 VTEC	96 / 01	**PD/493**	Akebono			Sem ABS
CIVIC 1.5i 16V DX	91 / 96			**PD/398**	Akebono	
CIVIC 1.5i 16V DX / GL / GLX	92 / 95	**PD/404**	Sumitomo	**PD/457**	Akebono	
CIVIC 1.5i 16V LS COUPÉ	94 / 96	**PD/493**	Akebono			
CIVIC 1.5i DX / 16V DX / DXI	91 / 96	**PD/404**	Sumitomo	**PD/398**	Akebono	
CIVIC 1.6	98 /	**PD/394**	Girling	**PD/457**	Akebono	
CIVIC 1.6 16V EX / LX / LXB	99 / 00	**PD/71**	Varga			
CIVIC 1.6 16V Vtec	91 / 95	**PD/404**	Akebono			
CIVIC 1.6 EX	82 / 92	**PD/386**	Akebono	**HO/332-CP**	Akebono	
CIVIC 1.6 LS	82 / 92	**PD/386**	Akebono	**HO/332-CP**	Akebono	
CIVIC 1.6i 16V ES	92 / 96	**PD/493**	Akebono	**PD/398**	Akebono	Sem ABS
CIVIC 1.6i 16V ES / VT / ESi	92 / 95	**PD/404**	Sumitomo	**PD/398**	Akebono	Con ABS
CIVIC 1.6i 16V ESi	92 / 95			**PD/398**	Akebono	
CIVIC 1.6i 16V GL / CRX / Si	/ 95			**PD/457**	Akebono	
CIVIC 1.6i 16V LS COUPÉ	92 / 96	**PD/493**	Akebono			Sem ABS
CIVIC 1.6i 16V VT	94 / 96	**PD/493**	Akebono	**PD/398**	Akebono	
CIVIC 1.6i 16V VT	/ 95			**PD/457**	Akebono	
CIVIC 1.6i 16V VTEC	94 / 96	**PD/493**	Akebono			
CIVIC 1.6i DR	93 /	**PD/404**	Sumitomo	**PD/398**	Akebono	Con ABS
CIVIC 1.6i ES	91 / 96	**PD/404**	Sumitomo	**PD/398**	Akebono	
CIVIC 1.6i LS / SR Vtec	95 /	**PD/404**	Sumitomo			
CIVIC1.7	01 / 05			**HO/334-CPA**		Freio traseiro Ø 191x34,5mm
CIVIC 1.7 16V EX / LX / LXB	01 /	**PD/71**	Varga			
CIVIC 1.8	98 /	**PD/449**	Akebono	**PD/554**	Akebono	
CIVIC 1.8	98 /	**PD/394**	Girling	**PD/554**	Akebono	
CIVIC 1.8 GX (AMERICANA)	06 /	**PD/1388**				
CIVIC 1.8 LXS	13 /	**PD/1388**		**PD/554**		
CIVIC 2.0 LXR	13 /	**PD/1388**		**PD/554**		
CIVIC 2.0	96 /	**PD/397**	Akebono			
CIVIC 150i	96 /			**PD/398**	Akebono	
CIVIC 160i	96 /			**PD/398**	Akebono	
CIVIC 160i Vtec	96 /			**PD/398**	Akebono	
CIVIC AERODECK 1.8 16V	98 / 01	**PD/449**	Akebono			
CIVIC COUPE 1.5i LSi	94 / 95	**PD/404**	Akebono			
CIVIC COUPE 1.6i	94 / 95	**PD/404**	Akebono			
CIVIC DEL SOL	95 / 97	**PD/782**		**PD/398**	Akebono	
CIVIC DX	91 / 96	**PD/386**	Akebono			Importado
CIVIC EX	97 / 98	**PD/493**	Akebono			
CIVIC EX	12 /	**PD/1404**				
CIVIC EX / LX	06 / 07	**PD/563**		**PD/554**		
CIVIC EX / LX 1.6L	97 / 02	**PD/563**				
CIVIC EX / LX 1.7L	03 / 05	**PD/563**				
CIVIC EX 1.6 16V	99 / 00	**PD/71**	Varga	**HO/173-CPA**		
CIVIC EX 1.7 16V	01 / 06	**PD/71**	Varga	**HO/173-CPA**		
CIVIC EXS	07 /	**PD/71**	Varga	**PD/554**		
CIVIC GX	12 /	**PD/1413**				
CIVIC LX	91 / 96	**PD/386**	Akebono	**HO/333-CP**		Importado
CIVIC LX	97 / 98	**PD/493**	Akebono	**HO/333-CP**		
CIVIC LX 1.6 16V	99 / 00	**PD/71**	Varga	**HO/173-CPA**		

MODEL / *MODELO*	YEAR - *AÑO*	FRONT *DELANTERA*	SYSTEM *SISTEMA*	REAR *TRASERA*	SYSTEM *SISTEMA*	OBS.
HONDA						
CIVIC LX 1.7 16V	01 / 06	**PD/71**	Varga	**HO/173-CPA**		
CIVIC LXB 1.6 16V	99 / 00	**PD/71**	Varga	**HO/173-CPA**		
CIVIC LXB 1.7 16V	01 / 06	**PD/71**	Varga	**HO/173-CPA**		
CIVIC LXS	07 /	**PD/71**	Varga	**PD/554**		
CIVIC SHUTTLE 1.5i 16V GL / 1.6i 16V	/ 94	**PD/386**				
CIVIC SI	99 / 00	**PD/386**		**PD/398**		
CIVIC SI	05 /			**PD/554**		
CIVIC SI 2.0 16V	07 /	**PD/1052**	Akebono	**PD/554**	Akebono	
CIVIC SI 2.0L	07 / 09	**PD/1052**		**PD/554**		
CIVIC V AERODECK 1.8	98 /			**PD/554**	Akebono	
CITY LX / DX 1.5 Flex 16V 10	10 /			**HO/334-CPA**		Freio traseiro Ø 191x34,5mm
CR-V	02 / 06	**PD/644**	Akebono	**PD/554**		
CR-V	98 /	**PD/782**				
CR-V	05 / 06	**PD/644**	Akebono	**PD/645**	Akebono	
CR-V	02 / 04	**PD/644**		**PD/690**		
CR-V	07 / 09	**PD/809**		**PD/645**		
CR-V 2.0 16V	95 / 02	**PD/449**	Akebono			
CR-V 2.4L	99 / 01	**PD/449**				
CR-V EX	07 /	**PD/809**	Sumitomo			
CR-V EXL	08 /	**PD/809**	Sumitomo			
CR-V EXSAB	07 /	**PD/809**	Sumitomo			
CRV i Scout AT / MT / Si AT / MT	97 /	**PD/449**	Akebono			
CR-V LX / PZW	08 /	**PD/809**	Sumitomo			
CRV LX	12 /	**PD/1393**				
CRX Del Sol	91 /			**PD/457**	Akebono	
CRV 4WD	13 /	**PD/1393**				
FIT	09 /			**HO/334-CPA**		Freio traseiro Ø 191x34,5mm
FIT 1.5L	06 / 08	**PD/493**				
FIT DX 1.5	14 /	**PD/1492**				
FIT EX 1.5 16V	09 /	**PD/685**	Teves	**PD/398**	Akebono	
FIT EX 1.5 16V	03 / 08	**PD/503**	Akebono	**HO/197-CPA**		
FIT EX 1.5	14 /	**PD/1492**				
FIT EXL 1.5 16V	09 /	**PD/685**	Teves	**PD/398**	Akebono	
FIT EXL 1.5	14 /	**PD/1492**				
FIT LX 1.4 16V	09 /	**PD/685**	Teves	**HO/197-CPA**		
FIT LX 1.5	14 /	**PD/1492**				
FIT LX 1.4 8V	03 / 08	**PD/503**	Akebono	**HO/197-CPA**		
FIT LXL 1.4 16V	09 /	**PD/685**	Teves	**PD/398**	Akebono	
FIT LXL 1.4 8V	03 / 08	**PD/503**	Akebono	**HO/197-CPA**		
FIT TWIST 1.5 16V	13 / 14	**PD/685**		**PD/457**		
HR-V LX/ EX/ EXL	15/	**PD/1494**	Akebono	**PD/1495**		
HR-V	11/	**PD/1494**		**PD/1495**		
HR-V 1.6 16V	99 /	**PD/449**	Akebono			
HRV 1.6 V IB / V ZY	99 /	**PD/449**	Akebono			
JAZZ 1.2	02 /	**PD/404**	Akebono			
JAZZ 1.4	02 /	**PD/404**	Akebono			
LEGEND 2.0i / 2.5i	/ 91	**PD/463-B**	Girling			
LEGEND 2.7i 24V	/ 95	**PD/463-B**	Girling			
LEGEND 3.2i V6	91 / 96	**PD/449**	Akebono	**PD/554**	Akebono	
LEGEND 3.5	96 /	**PD/449**	Akebono	**PD/554**	Akebono	
LEGEND 3.5 24V	96 /	**PD/449**	Akebono			
LEGEND COUPE 2.5 / 2.7	/ 94			**PD/554**	Akebono	
LOGO 1.3	99 / 02	**PD/404**	Akebono			
NSX 3.0 24V	90 /	**PD/449**	Akebono			

MODEL / *MODELO*	YEAR - *AÑO*	FRONT *DELANTERA*	SYSTEM *SISTEMA*	REAR *TRASERA*	SYSTEM *SISTEMA*	OBS.
HONDA						
NSX 3.2 24V	90 /	**PD/449**	Akebono			
NSX-X	90 / 96	**PD/449**	Akebono	**PD/554**	Akebono	
ODYSSEY	97 /	**PD/449**	Akebono	**PD/554**	Akebono	
ODYSSEY	00 / 04	**PD/721**		**PD/735**		
ODYSSEY	05 / 09	**PD/809**		**PD/726**		
ODYSSEY	11 /	**PD/1393**				
ODYSSEY 3.5L	00 / 01	**PD/721**				
PASSPORT	94 / 95			**PD/693**		
PASSPORT	00 / 02			**PD/693**		
PASSPORT	94 /	**PD/445**	Sumitomo			
PASSPORT	94 / 01	**PD/445**				
PILOT	12 /			**PD/1407**		
PILOT 3.5L	03 / 04	**PD/644**		**PD/735**		
PILOT EXL / LX	05 / 08	**PD/644**		**PD/735**		
PRELUDE	94 / 01			**PD/554**		
PRELUDE	92 / 96	**PD/388**				
PRELUDE 1.8 EX / EXR	92 /			**PD/401**	Akebono	
PRELUDE 2.0 4WS / Si	92 / 96	**PD/388**	Akebono	**PD/554**	Akebono	
PRELUDE 2.0 i 16V	90 / 92			**PD/457**	Akebono	
PRELUDE 2.0 i 16V	92 / 96	**PD/388**	Akebono	**PD/554**	Akebono	
PRELUDE 2.0 SRS	97 /	**PD/388**	Akebono	**PD/554**	Akebono	
PRELUDE 2.2 Vtec / Vti	97 /	**PD/449**	Akebono	**PD/554**	Akebono	
PRELUDE 2.2i 16V	96 /	**PD/449**	Akebono			
PRELUDE 2.2i 16V Vtec	92 / 96	**PD/449**	Akebono			
PRELUDE 2.3i 16 V	91 / 96	**PD/449**	Akebono	**PD/554**	Akebono	
PRELUDE 2.3i 16V	92 / 96	**PD/449**	Akebono			
PRELUDE COUPE 2.2	92 / 95			**PD/554**	Akebono	
PRELUDE Si	92 / 95	**PD/388**	Akebono	**PD/554**	Akebono	
RIDGELINE	12 /	**PD/1406**				
RIDGELINE RTL 3.5L	07 / 09			**PD/1073**		
SHUTTLE 2.2 16V	94 / 01	**PD/449**	Akebono			
SHUTTLE 2.2 16V ES / LS	94 / 98	**PD/449**	Akebono	**PD/554**	Akebono	
SHUTTLE 2.3 16V	94 / 01	**PD/449**	Akebono			
SHUTTLE 2.3 16V ES / LS	98 /	**PD/449**	Akebono	**PD/554**	Akebono	
HUBER-WARCO						
MOTONIVELADORA				**TR/328**	100118	Est. 8049
HUMMER						
H2	03 / 07	**PD/571**		**PD/572**		
H3 3.5L / 3.7L / 5.3L	06 / 09	**PD/1074**		**PD/1075**		
HYUNDAI						
91 A		**F/836**		**F/837**		
ACCENT 1.3	94 /	**PD/382**	Akebono	**HY/339-CPA**		
ACCENT 1.5	94 /	**PD/382**	Akebono	**HY/339-CPA**		
ACCENT 1.4 GL	06 /	**PD/1279**				
ACCENTE 1.5 GLS	06 /	**PD/1279**				
ACCENTE 1.6 GLS	06 /	**PD/1279**				
ACCENT	10/	**PD/1409**				
AMICA	03 / 04	**PD/535**				
ATOS	01 /	**PD/535**				
ATOS 1.0 GL	98 /	**PD/478**	Akebono			
ATOS 1.0 GLS	98 /	**PD/478**	Akebono			
AZERA 3.0 V6	12 /	**PD/1277**	Mando	**PD/1368**	Akebono	

MODEL / *MODELO*	YEAR - *AÑO*	FRONT *DELANTERA*	SYSTEM *SISTEMA*	REAR *TRASERA*	SYSTEM *SISTEMA*	OBS.
HYUNDAI						
AZERA 3.3 V6	07 /	**PD/1277**	Mando			
AZERA	06 /	**PD/635**	Akebono	**PD/725**	Mando	
BUS		**F/824**		**F/822**		
COUNTY Minibus	99 /	**PD/102**	Varga			
ELANTRA 1.8 16V	12 /	**PD/1348**	Mando	**PD/1368**	Akebono	
ELANTRA	94 / 06			**PD/666**	Mando	
ELANTRA	00	**PD/706**				
ELANTRA	02 / 04	**PD/752**				
ELANTRA	07 /			**PD/725**	Akebono	
ELANTRA	96 / 98	**PD/706**				
ELANTRA 1.5i	90 /	**PD/382**	Akebono			
ELANTRA 1.6 GL / GLI / GLS Wagon	96 /	**PD/453**	Akebono			
ELANTRA 1.6 GLS	93 /	**PD/453**	Akebono			
ELANTRA 1.6 GLS	95 /	**PD/453**	Akebono			Con ABS
ELANTRA 1.8 GL / GLI	94 /	**PD/453**	Akebono			
ELANTRA 1.8 GLS / 2.0 GLS	96 /	**PD/453**	Akebono			
ELANTRA TOURING	09 / 10			**PD/1334**	Mando	
ENTOURAGE	07			**PD/794**		
EXCEL 1.3i / 1.5i	88 / 95	**PD/382**	Akebono	**HY/339-CPA**		
GALLOPER 2.5 TD	98 /	**PD/343**	Sumitomo			
GALLOPER 3.0i V6	98 /	**PD/343**	Sumitomo			
GENESIS 3.8 V6	08 /	**PD/1287**	Mando	**PD//1487**		
GENESIS 3.8 V6	08 /	**PD/1352**	Mando	**PD//1487**		
H-100	93 /	**PD/473**	Girling			
H-1 2.5 CDRI SVX	10- 97 /	**PD/630**	Akebono			
H-1 2.5 Tci	10- 97 /	**PD/630**	Akebono			
H-1 TODOS	05 /	**PD/630**	Akebono			
H-1	06 / 10	**PD/1359**				
H-100 Diesel	93 /	**PD/473**	Girling	**MB/156-CP**		
H-100 Diesel	94 / 00	**PD/473**	Girling	**HY/338-CP**		
H-200	93 /	**PD/473**	Girling			
HB20 X 1.6	12 /	**PD/1348**	Mando			
HB20 S 1.6	12 /	**PD/1348**	Mando			
HD 270 CAÇAMBA		**4515**				
HD 270 TORPEDO		**4551**				
HR 2.5	06 /	**PD/354**	Akebono	**HY/338-CP**	Sumitomo	Roda dupla traseira
HR 2.5	06 /	**PD/354**	Akebono	**KI/144-CP**		
i10 1.1 CDRi KW	01- 08 /	**PD/633**	Akebono			
i10 1.1 KW HATCHBACK MOTOR	01- 08 /	**PD/633**	Akebono			
i10 1.2 KW HATCHBACK MOTOR	11- 08 /	**PD/633**	Akebono			
i30 1.6 16V	14 /	**PD/1348**		**PD/1368**		
i30 1.8 16V	13 /	**PD/1348**		**PD/1368**		
i30 2.0 16V	09 /	**PD/1092**	Mando	**PD/1093**	Mando	Freio de mão **HY/340-CP**
iX35 2.0 16V	10 /	**PD/1296**	Mando	**PD/1093**	Mando	Pastilha dianteira usada apenas para disco de 300mm
iX35 2.0 16V	10 /	**PD/1462**		**PD/1093**	Mando	
MIGTHY	88 /	**PD/102**	Varga			
PORTER GRACE	93 /	**PD/473**	Girling			
SANTA FE 2.0 CRDi	01 /	**PD/630**	Akebono	**PD/725**	Akebono	
SANTA FE 2.7 V6 4x4	06 /	**PD/1287**	Mando	**PD/1341**	Brembo	
SANTA FE 3.5 V6 4x4	11 /	**PD/1287**	Mando			
SANTA FE 2.4 / 2.7 / 3.5 16V 4x4	10 /			**PD/1366**	Akebono	
SANTA FÉ 3.3 DYNAMIC 4x4	03 / 06	**PD/1352**	Mando			
SCOUPE	92	**PD/382**	Akebono			

MODEL / *MODELO*	YEAR - *AÑO*	FRONT *DELANTERA*	SYSTEM *SISTEMA*	REAR *TRASERA*	SYSTEM *SISTEMA*	OBS.
HYUNDAI						
S-COUPE 1.5	91 / 96	**PD/382**	Akebono			
SEDONA	06			**PD/794**		
SONATA	99 / 02			**PD/725**	Akebono	
SONATA	03 / 05	**PD/635**	Akebono	**PD/725**	Akebono	
SONATA	96 / 97	**PD/706**				
SONATA	11 /	**PD/1462**		**PD/1356**		
SONATA 2.0	08 /			**HY/337-CP**		
SONATA 2.0 GL	94 /	**PD/453**	Akebono			
SONATA 3.3 STYLE 6CIL.	06 /	**PD/1277**	Mando			
SONATA 3.3 V6	06 /	**PD/1277**	Mando			
SONATA GLS 3.0 GLS V6	94 /	**PD/453**	Akebono			
STELLAR 1.6 GLS / 2.0 GLS	86 / 90	**PD/382**	Akebono			
SUPER		**F/ 833**		**F/835**		
TIBURON	96 /	**PD/453**	Akebono			
TIBURON	97 / 99	**PD/706**				
TIBURON	97 /			**PD/666**		
TRUCK				**F/820**		
TUCSON	04 /	**PD/635**	Akebono	**PD/725**	Akebono	Freio de mão **HY/337-CP**
TUCSON	04 /	**PD/635**	Akebono	**HY/336-CP**		
TUCSON	10 /	**PD/1462**				
VERA CRUZ 3.8 V6	07 /	**PD/1298**	Hyundai	**PD/1299**	Mando	
VERNA 1.4 GL	11-05 /	**PD/1279**				
VERNA 1.5 GLS	11-05 /	**PD/1279**				
VERNA 1.6 GLS	11-05 /	**PD/1279**				
VELOSTER 1.6 16V	12 /	**PD/1348**	Mando	**PD/1368**	Akebono	
XG 300	01 / 02	**PD/630**	Akebono			
XG 350	02 / 03	**PD/630**	Akebono			
XG 350	03 / 05	**PD/667**	Akebono			
IDEROL						
3° EIXO	/ 79			**4195-B**		
3° EIXO	80 /			**4514-F** **4515-C**	Bendix -	
CARRETA	/ 79			**SV/223** **SV/226**		
CARRETA	80 /			**4515-C**		1 e 2 eixos
CARRETA	80 / 99			**CA/32**	Master	3 eixos
CARRETA	00 /			**CA/33**	Master	3 eixos
IDEROL	/ 79			**SV/223**		
IDEROL	/ 79			**SV/226**		
IDEROL	80 /					4514-G
IDEROL	80 /					4515-G
IDEROL	80 /			**4515-G**		1 y 2 ejes
IDEROL	80 /			**CA/32**		3 ejes
IKARUS						
BUSES 280	84 /	**19896 00**		**19896 00**		Also 2nd rear axle
INDECAR						
INDECAR				**AC/30**		
INFINITI						
FX 35	03 / 06	**PD/638**		**PD/585**		
FX 35	07 /			**PD/585**		
FX 35	07 /	**PD/1014**				

MODEL / *MODELO*	YEAR - *AÑO*	FRONT *DELANTERA*	SYSTEM *SISTEMA*	REAR *TRASERA*	SYSTEM *SISTEMA*	OBS.
INFINITI						
FX 45	03 / 06	**PD/638**		**PD/585**		
FX 45	07 /			**PD/585**		
FX 45	07 /	**PD/1014**				
G 20	91 / 94	**PD/453**	Sumitomo			
G 20	99	**PD/550**				
G 20	99 / 01			**PD/692**	Sumitomo	
G 20	02 /	**PD/728**				
G 35	03 / 06	**PD/728**		**PD/585**		
I 30	97 / 99	**PD/700**		**PD/692**		
I 30	00 / 01	**PD/727**		**PD/691**		
I 30	96 / 00			**PD/692**	Sumitomo	
I 30	00 / 01	**PD/728**		**PD/692**	Sumitomo	
I 35	02 / 03	**PD/727**		**PD/741**		
I 35	02 / 04	**PD/728**				
JX35	13 /	**PD/1429**				
Q 45	97 / 98	**PD/561**				
Q 45	99 / 01	**PD/562**				
Q 45	97 / 01	**PD/561**		**PD/1039**		
Q 45	02 / 05	**PD/1014**		**PD/1039**		
QX 4	97 / 01	**PD/561**				
QX 4	02 / 03	**PD/562**				
QX56	12-11 /	**PD/1390**				
INTERNATIONAL						
1400 SERIES (Metro II)	87 / 89	**PD/557**		**PD/557**		
1600 SERIES (1650)	83 / 89	**PD/557**		**PD/557**		
1600 SERIES (Metro II)	87 / 89	**PD/557**		**PD/557**		
1600 SERIES / 1652SC	98	**PD/146**		**PD/146**		
1652 SC	98 / 04	**PD/145**		**PD/145**		
1700 SERIES	81 / 83	**PD/557**		**PD/557**		
1750	83 / 89	**PD/557**		**PD/557**		
1753 School Bus	84 / 89	**PD/557**		**PD/557**		
1800 SERIES / 1850	81 / 87	**PD/557**		**PD/557**		
1853 School Bus	84 / 89	**PD/557**		**PD/557**		
1900 SERIES (1950)	85 / 89	**PD/557**		**PD/557**		
3000 SERIES	98 / 04	**PD/145**		**PD/145**		
3000	96 / 97	**PD/557**		**PD/557**		
3200	02 / 03	**PD/146**		**PD/146**		
4000	05 / 06	**PD/146**		**PD/146**		
4000 SERIES	98 / 04	**PD/145**		**PD/145**		
4200	04 / 08			**4707** **4710**		
4300	02/08	**4719** **4720**		**4709** **4707**		
4400 (4x2)		**4720**		**4707**		
4400 (6x2)		**4720**		**4707**		
4400 (6x4)		**4720**		**4707**		
7400	02 / 08	**4720** **4524-A**		**4707** **4515-G**		
7600	06 / 08			**4707** **4515-G**		
9200I	01 / 09	**4720** **4524-A**		**4707** **4515-G**		
9400	99 / 00	**4720** **4524-A**		**4707** **4515-G**		

MODEL / *MODELO*	YEAR - *AÑO*	FRONT *DELANTERA*	SYSTEM *SISTEMA*	REAR *TRASERA*	SYSTEM *SISTEMA*	OBS.
INTERNATIONAL						
9400I	01 / 09	**4720** **4524-A**		**4707** **4515-G**		
4700 / 4700LP / 4900 4x2	98	**PD/146**		**PD/146**		
4700 4x2	98 /	**4524-B**	Master	**4707**	Master	
4900 4x2	98 /	**4524-B**	Master	**4707**	Master	
4900 6x4	98 /	**4524-B**	Master	**4707**	Master	3° eixo 4707
9200 4x2	98 /	**4524-B**	Master	**4515-G**		
9200 6x4	98 /	**4524-B**	Master	**4707**	Master	3° eixo 4707
9800 6x4	00 /	**4720**		**4707**	Master	3° eixo 4707
AC-184	57 / 65	**659-B**		**4514-F**	Bendix	
CF-500	08 / 09	**PD/570**		**PD/570**		
CF-600	08 / 09	**PD/640**		**PD/640**		
DAY CAB	02	**4524-A**		**4707**		
DAY CAB DDC	02	**4720** **4524-A**		**4707** **4515-G**		
DAY CAB N14	02	**4720** **4524-A**		**4707** **4515-G**		
DURASTAR 4200	09			**4707** **4710**		
DURASTAR 4300	09	**4719** **4720**		**4709** **4707**		
N-184	57 / 65	**659-B**		**4514-F**	Bendix	
NV-184	57 / 65	**659-B**		**4514-F**	Bendix	
SCHOOL BUS	98 / 04	**PD/145**		**PD/145**		
Series School Bus 3000FE / 3400 / 3600SC / 3800SC	98	**PD/146**		**PD/146**		
WORKSTAR 7300	09			**4707** **4515-G**		
WORKSTAR 7400	09	**4524-A**		**4707** **4515-G**		
WORKSTAR 7600	09			**4707** **4515-G**		

ISUZU						
730		**F/1131**				
AMIGO	94			**PD/693**		
AMIGO	00			**PD/693**		
AMIGO	93 / 00	**PD/445**				
AMIGO	90 / 94	**PD/357**	Akebono			
AXIOM	02 / 04			**PD/693**		
CX 249J	88 /	**F/803**				
CX 409				**4734**		
CXG	86 / 89	**1418**				
CXH	86 / 89	**1418**				
CXZ	89 / 96	**1418**		**F/786**		
CXZ				**4734**		
CXZ 49QT	87 /	**F/803**				
DX 415				**4734**		
ELF 200	06 /	**PD/1411**				
ELF 300				**F/1119**		
ELF 300	07 / 09	**PD/625**				
ELF 400	07 / 09	**PD/624**				
ELF 450	07 / 08	**PD/626**				
EXZ 49JT	83 /	**F/803**				
FFR 33				**F/763**		
FRR 500	96 / 01	**1458**				
FRR 550A	96 / 01	**1458**				

MODEL / *MODELO*	YEAR - *AÑO*	FRONT *DELANTERA*	SYSTEM *SISTEMA*	REAR *TRASERA*	SYSTEM *SISTEMA*	OBS.
ISUZU						
FSR / FTR / FVR	02			**PD/144**		
FSR 113				**1455**		
FSR 11FA	85 / 89	**1418**				
FSR 11H / K	86 / 90	**1458**		**1455**		
FSR 12LA / HA	86 / 90	**1458**		**1455**		
FSR 13	85 / 92	**1458**		**1455**		
FSR 32	92 /	**1458**				
FSR 400				**1455**		
FSR 450	88 / 93	**1458**		**1455**		
FSR 480	85 / 92			**F/725**		
FSR 480	85 / 92			**1455**		
FSR 482	85 / 92	**1458**		**1455**		
FSR 49K	88 /			**F/725**		
FSR 500	88 / 93	**1458**		**1455**		
FSR 550	92 / 96	**1458**				
FSR 750	92 / 96	**1458**				
FTR / FVR	03	**PD/144**		**PD/144**		
FTR / FVR / FXR	04 / 08	**PD/144**		**PD/144**		
FTR 11LT	85 / 87	**1418**		**1418**		
FTR 11LT	85 / 87			**F/725**		
FTR 11LTA	87 / 89			**F/725**		
FTR 12H	85			**F/725**		
FTR 12HA	86 / 91	**1418**		**1418**		
FTR 49HFT	88 /			**F/725**		
FTR 49L	88 /			**F/725**		
FTR 49LT	88 /			**F/725**		
FTR 800	88 / 00	**1418**		**F/836**		
FTR 800	88 / 00	**F/836**		**F/836**		
FTR 800				**4734**		
FTR 850	96 / 03	**1418**		**1418**		
FTS 700	89 / 04-96	**1418**		**1418**		4 x 4
FTS 750	96 /			**F/725**		4 x 4
FVM 1400	89 / 03	**1418**		**4311-J**		
FVR 11NT	85 / 87	**1418**		**F/725**		
FVR 12N	85 / 87	**1418**		**F/725**		
FVR 13NTA	88 / 96	**1418**		**F/725**		
FVR 900	88 / 97	**1418**				
FVR 900 Medium/ Long	88 / 97	**F/ 836**				
FVR 900L	92 /	**4317-G**		**4311-J**		Eaton Axle
FVR				**F/1137**		
FVZ				**F/1137**		
FVZ 1400	89 / 03	**1418**		**4311-J**		Eaton Axle
H	05 / 08	**PD/144**		**PD/144**		
JCR 420	80 / 85			**F/725**		
JCR 500	80 / 85			**F/725**		
KS 21	79 / 82	**NN/12**		**NN/12**		
KS 22	82 / 85	**NN/12**		**NN/12**		
KS 32	82 / 85	**NN/12**		**NN/12**		
LTI 11P	86 /	**1418**				
N 3500 D	94 / 98	**F/763**		**F/763**		
N 4000 D	94 / 98	**F/763**		**F/763**		
N NPR	88 / 91	**PD/1004**				
N NPR FLAT LOW	87 / 92	**PD/1004**				
NKR SERIES 3.0 TON / 3.5 TON	98 /	**PD/624**				

MODEL / *MODELO*	YEAR - *AÑO*	FRONT *DELANTERA*	SYSTEM *SISTEMA*	REAR *TRASERA*	SYSTEM *SISTEMA*	OBS.
ISUZU						
NN 45				**1478**		
NPR 250	94 /	**NN/12**		**NN/12**		
NPR 300	94 /	**F/763**		**F/763**		
NPR 400	89 / 20	**NN/12**		**NN/12**		
NPR 400 Medium / Long	92 /	**F/763**		**F/763**		
NPR 59LT	85 / 88	**NN/12**		**NN/12**		
NPR 59P	86 / 88	**NN/12**		**NN/12**		
NPR 59PJ	86 / 88	**NN/12**		**NN/12**		
NPR 59PR	86 / 88	**NN/12**		**NN/12**		
NPR 66L	94 /	**F/763**		**F/763**		
NPR SERIES	97 / 05	**PD/624**				
NPR SERIES	99 / 05	**PD/626**				
NPS 300	92 / 20	**NN/12**		**F/763**		4 X 4
NQR 450	98 /	**F/764**		**F/764**		
NQR 500 TURBO	98 /	**F/764**		**F/764**		
NQR SERIES	99 / 05	**PD/626**				
NVR 12N	86 /			**F/725**		
PICK-UP Diesel	92 /	**PD/357**	Akebono	**CB/37-S/F**		
PR 70	01	**F/763**		**F/763**		
RODEO	93 / 95			**PD/693**		
RODEO	00 / 04			**PD/693**		
RODEO	93 / 00	**PD/445**				
RODEO 2.5 / 2.8	91 /	**PD/357**	Akebono			
RODEO 3.2 i V6 24V S/ LS/ 4WD	93 /	**PD/357**	Akebono			
RODEO SPORT	01 / 03			**PD/693**		
RODEO SPORT	01 / 02	**PD/445**				
SBR 420	76 / 85	**1458**		**1455**		
SBR 422	76 / 82	**1458**		**1455**		
SCR 420	83 / 85	**1458**		**1455**		
SCR 500	83 / 85	**1458**		**1455**		
SHR 361TA	81 / 86	**F/803**				4 x 2
SHZ 451TA	80 / 88	**F/803**				6 x 2
SHZ 581TA	80 / 88	**F/803**				6 x 2
SPR 361	81 / 86	**F/803**				4 x 2
SPR 361S	81 / 86	**F/803**				4 x 2
SPZ 440	82 / 85	**1458**		**1455**		
SPZ 450	82 / 85	**1458**		**1455**		
SPZ 451	80 / 88	**F/803**				6 x 2
SPZ 451	80 / 88	**F/803**				6 x 4
SPZ 580	82 / 85	**1458**		**1455**		
SPZ 581	80 / 88	**F/803**				6 x 2
SPZ 581	80 / 88	**F/803**				6 x 4
SPZ 581S	80 / 88	**F/803**				6 x 2
SPZ 581S	80 / 88	**F/803**				6 x 4
SPZ 650	82 / 85	**1458**		**1455**		
TROOPER	92 / 03	**PD/445**		**PD/693**		
TROOPER 3.0L	87 / 98	**PD/655**				
TROOPER 2.3 D	92 /	**PD/357**	Akebono			
TROOPER 2.3 DLX	86 /	**PD/357**	Akebono			
TROOPER 3.2 V6	93 /	**PD/357**	Akebono			
TROOPER 3.2 V6	94 /	**PD/445**	Sumitomo			
VehiCROSS	99 / 01			**PD/693**		
VHZ 441TA	80 / 86	**F/803**				6 x 4
VL150				**F/1131**		

MODEL / *MODELO*	YEAR - *AÑO*	FRONT *DELANTERA*	SYSTEM *SISTEMA*	REAR *TRASERA*	SYSTEM *SISTEMA*	OBS.
ISUZU						
VPZ 441S	80 / 86	**F/803**				6 x 4
X	80 / 85			**F/725**		
IVECO						
150 N/T	93 /	**FI/119**	Fiat	**FI/119**	Fiat	
190.29 N/T	93 /	**FI/119**	Fiat	**FI/119**	Fiat	
190.33 N/T	93 /	**FI/119**	Fiat	**FI/119**	Fiat	
619 NI/TI / 619 N/T	93 /	**FI/119**	Fiat	**FI/119**	Fiat	
BUS CC 170 E 22	05 /	**FD/88**	Master	**4710**	Master	Ônibus
CARGO PLUS 18 Ton	02-02 /	**PD/123**	Meritor	**PD/123**	Meritor	
CARGO PLUS 18 Ton	02-02 /	**PD/139**	Brembo	**PD/139**	Brembo	
CARGO PLUS 7,5 Ton	02-02 /	**PD/123**	Meritor	**PD/123**	Meritor	
CARGO PLUS 7,5 Ton	02-02 /	**PD/139**	Brembo	**PD/139**	Brembo	
CAVALLINO 180 E 32 T	05-06 /	**FD/87**	Master	**FD/88**	Master	
CAVALLINO 450 E 32	05-06 /	**FD/87**	Master	**FD/88**	Master	
CHASSI DE ÔNIBUS 17 Ton		**MP/410**		**MP/411**		
CITYCLASS 70C16	04 /	**PD/139**	Brembo	**PD/201**	Brembo	Micro-ônibus
DAILY	89 / 07			**IV/163-CP**		Freio de mão
DAILY 35.10	90 /	**PD/359-A**	Brembo			
DAILY 35.10	97 /	**PD/122**	Brembo	**PD/122**	Brembo	
DAILY 35.10 New/ 49.10 New	97 /	**PD/122** **PD/122-A**	Brembo	**PD/122** **PD/122-A**	Brembo	
DAILY 35.10 New/ 49.10 New	97 /	**PD/122-A**	Brembo	**PD/122-A**	Brembo	
DAILY 35C15	09-11 /			**PD/190**		
DAILY 35.8	94 /	**PD/359-A**	Brembo			
DAILY 35S14 - CHASSI-CABINE / CABINE DUPLA	07 /	**PD/189**	Brembo	**PD/122**	Brembo	
DAILY 35S14 - FURGONE / GRAN FURGONE	07 /	**PD/189**	Brembo	**PD/122**	Brembo	
DAILY 38.13	05 / 07	**PD/122**	Brembo	**PD/122**	Brembo	
DAILY 40.13	05 / 07	**PD/122**	Brembo	**PD/122**	Brembo	
DAILY 40C15	09-11 /			**PD/190**		
DAILY 40.8	94 /	**PD/359-A**	Brembo			
DAILY 45.10 / 49.10	94 /	**PD/360-A**	Perrot			
DAILY 45S14 - CHASSI-CABINE / CABINE DUPLA	07 /	**PD/189**	Brembo	**PD/122**	Brembo	
DAILY 45S14 - GRAN FURGONE	07 /	**PD/189**	Brembo	**PD/122**	Brembo	
DAILY 45S16	07 /	**PD/189**	Brembo	**PD/122**	Brembo	
DAILY 49.10	97 /	**PD/122**	Brembo	**PD/122**	Brembo	
DAILY 49.12	97 /	**PD/122**	Brembo	**PD/122**	Brembo	
DAILY 50.13	05 / 07	**PD/122**	Brembo	**PD/122**	Brembo	
DAILY 55C16 - CHASSI-CABINE / CABINE DUPLA	07 /	**PD/189**	Brembo	**PD/122**	Brembo	
DAILY 55C16 - GRAN FURGONE / MAXI FURGONE	07 /	**PD/189**	Brembo	**PD/122**	Brembo	
DAILY 55C16 - VETRATO	07 /	**PD/189**	Brembo	**PD/122**	Brembo	
DAILY 59.12	01 /	**PD/339-A**	Perrot	**IV/158**	Perrot	
DAILY 59.12 Turbo Chasis	99 /	**PD/420-A**	Perrot	**PD/420-A**	Perrot	
DAILY 59.12 Turbo Furgon	99 /	**PD/420-A**	Perrot	**PD/420-A**	Perrot	
DAILY 60.12	03 /	**PD/339-A**	Perrot	**IV/158**	Perrot	
DAILY 65C15	09-11 /			**PD/190**		
DAILY 65C15 V/P	06 /			**PD/201**	Brembo	
DAILY 70.12	03 /	**PD/339-A**	Perrot	**IV/158**	Perrot	
DAILY 70.13	06 / 07	**PD/339-A**	Perrot	**IV/158**	Perrot	
DAILY 70C15	09-11 /			**PD/190**		
DAILY 70C16 - CHASSI-CABINE / CABINE DUPLA	07 /	**PD/139**	Brembo			
DAILY I 30.8	01-90 / 05-96	**PD/359-A**	Brembo			
DAILY I 30.8 / 30.10	05-96 /	**PD/151-A**	Brembo			
DAILY I 35.10	05-96 /	**PD/151-A**	Brembo			

MODEL / *MODELO*	YEAR - *AÑO*	FRONT *DELANTERA*	SYSTEM *SISTEMA*	REAR *TRASERA*	SYSTEM *SISTEMA*	OBS.
IVECO						
DAILY I 35.12	05-96 /	**PD/192-A**	Wabco			
DAILY I 35.12 TURBO	01-90 / 05-96	**PD/360-A**	Wabco			
DAILY I 35.8 / 35.10 / 35.12	01-90 / 05-96	**PD/359-A**	Brembo			
DAILY I 35.8 / 35.10 / 35.12	05-96 /	**PD/122-A**	Brembo	**PD/122-A**	Brembo	
DAILY I 40.10	01-85 / 12-96	**PD/150-A**	Wabco			
DAILY I 40.10	01-97 /	**PD/192-A**	Wabco			
DAILY I 40.10 TURBO	01-85 / 12-96	**PD/360-A**	Wabco			
DAILY I 40.8	01-90 / 05-96	**PD/359-A**	Brembo			
DAILY I 40.8 TURBO	01-83 / 12-86	**PD/150-A**	Wabco			
DAILY I 40.8 TURBO	01-87 / 05-96	**PD/191-A**	Wabco			
DAILY I 45.10	01-85 / 12-96	**PD/150-A**	Wabco			
DAILY I 45.10	01-85 / 05-96	**PD/360-A**	Wabco			
DAILY I 45.10 TURBO	01-87 / 05-96	**PD/191-A**	Wabco			
DAILY I 45.10 / 45.12	05-96 /	**PD/192-A**	Wabco			
DAILY I 45.12 TURBO	06-90 / 04-96	**PD/360-A**	Wabco			
DAILY I 49.10	01-85 / 12-96	**PD/150-A**	Wabco			
DAILY I 49.10 TURBO	01-85 / 05-96	**PD/360-A**	Wabco			
DAILY I 49.10 TURBO	01-87 / 05-96	**PD/191-A**	Wabco			
DAILY I 49.10 / 49.12	05-96 /	**PD/122-A**	Brembo	**PD/122-A**	Brembo	
DAILY I 49.10 / 49.12	05-96 /	**PD/192-A**	Wabco			
DAILY I 49.12 TURBO	06-90 / 05-96	**PD/360-A**	Wabco			
DAILY I 59.12	05-90 / 04-96	**PD/420-A**	Wabco			
DAILY I 59.12	05-96 /	**PD/339-A**	Wabco			
DAILY II 35 SERIES	05-99 /	**PD/122-A**	Brembo	**PD/122-A**	Brembo	
DAILY II 35 SERIES	05-99 /	**PD/122-A**	Brembo	**PD/163**	Brembo	
DAILY II 50 SERIES	05-99 /	**PD/122-A**	Brembo	**PD/122-A**	Brembo	
DAILY II 50 SERIES	05-99 /	**PD/122-A**	Brembo	**PD/163**	Brembo	
DAILY II 65 C 14 4x2		**PD/208**				
DAILY II 65 C 15	05-99 /	**PD/122-A**	Brembo	**PD/122-A**	Brembo	
DAILY II 65 C 15	05-99 /	**PD/122-A**	Brembo	**PD/163**	Brembo	
DAILY III	07 /	**PD/189-A**	Brembo	**PD/190**	Brembo	
DAILY III 60C15 DK K KK	06 /			**PD/201**	Brembo	
DAILY III 60C18 DK K V/P	06 /			**PD/201**	Brembo	
DAILY III 60C18 KK	06 /			**PD/201**	Brembo	
DAILY III 65C15 D P V	06 /			**PD/201**	Brembo	
DAILY III 65C18 V	06 /			**PD/201**	Brembo	
DAILY III 65C18 V/P	06 /			**PD/201**	Brembo	
DAILY III Box Body / Estate - 29L10 V +A310	05-06 /	**PD/189**	Brembo			
DAILY III Box Body / Estate - 29L12 V / 29L12 V/P	05-06 /	**PD/189**	Brembo			
DAILY III Box Body / Estate - 29L14 C / 29L14 C/P / 29L14 V / 29L14 V/P	05-06 /	**PD/189**	Brembo			
DAILY III Box Body / Estate - 35C10 / 35S10	05-06 /	**PD/189**	Brembo	**PD/190**	Brembo	
DAILY III Box Body / Estate - 35C11 V / 35S11 V	07-07 /	**PD/189**	Brembo	**PD/190**	Brembo	
DAILY III Box Body / Estate - 35C12 V / 35C12 V/P / 35S12 V / 35S12 V/P	05-06 /	**PD/189**	Brembo	**PD/190**	Brembo	
DAILY III Box Body / Estate - 35C13 V / 35C13 V/P / 35S13 V / 35S13 V/P	07-07 /	**PD/189**	Brembo	**PD/190**	Brembo	
DAILY III Box Body / Estate - 35C14 GV / 35C14 GV/P / 35S14 GV / 35S14 GV/P	07-07 /	**PD/189**	Brembo	**PD/190**	Brembo	
DAILY III Box Body / Estate - 35C14 V / 35C14 V/P / 35S14 V / 35S14 V/P	07-07 /	**PD/189**	Brembo	**PD/190**	Brembo	
DAILY III Box Body / Estate - 35C15 V / 35C15 V/P	05-06 /	**PD/189**	Brembo	**PD/190**	Brembo	
DAILY III Box Body / Estate - 35C17 V / 35C17 V/P / 35S17 V / 35S17 V/P	07-07 /	**PD/189**	Brembo	**PD/190**	Brembo	
DAILY III Box Body / Estate - 35C18 V / 35C18 V/P / 35S18 V / 35S18 V/P	05-06 /	**PD/189**	Brembo	**PD/190**	Brembo	
DAILY III Box Body / Estate - 35S14 C / 35S14 C/P / 35S14 V / 35S14 V/P / 35C14 V / 35C14 V/P	05-06 /	**PD/189**	Brembo			

MODEL / *MODELO*	YEAR - *AÑO*	FRONT *DELANTERA*	SYSTEM *SISTEMA*	REAR *TRASERA*	SYSTEM *SISTEMA*	OBS.
IVECO						
DAILY III Box Body / Estate - 35S14 C / 35S14 C/P / 35S14 V / 35S14 V/P / 35C14 V / 35C14 V/P	05-06 /			**PD/190**	Brembo	
DAILY III Box Body / Estate - 40C10 V	05-06 /	**PD/189**	Brembo	**PD/190**	Brembo	
DAILY III Box Body / Estate - 40C11 V	07-07 /	**PD/189**	Brembo	**PD/190**	Brembo	
DAILY III Box Body / Estate - 40C12 V / 40C14 V/P	05-06 /	**PD/189**	Brembo	**PD/190**	Brembo	
DAILY III Box Body / Estate - 40C13 V / 40C13 V/P	07-07 /	**PD/189**	Brembo	**PD/190**	Brembo	
DAILY III Box Body / Estate - 40C14 GV / 40C14 GV/P	07-07 /	**PD/189**	Brembo	**PD/190**	Brembo	
DAILY III Box Body / Estate - 40C14 V / 40C14 V/P	07-07 /	**PD/189**	Brembo	**PD/190**	Brembo	
DAILY III Box Body / Estate - 40C15 V / 40C15 V/P	05-06 /	**PD/189**	Brembo	**PD/190**	Brembo	
DAILY III Box Body / Estate - 40C17 V / 40C17 V/P	07-07 /	**PD/189**	Brembo	**PD/190**	Brembo	
DAILY III Box Body / Estate - 40C18 V / 40C18 V/P	05-06 /	**PD/189**	Brembo	**PD/190**	Brembo	
DAILY III Box Body / Estate - 45C15 V	05-06 /	**PD/189**	Brembo	**PD/190**	Brembo	
DAILY III Box Body / Estate - 45C17 V / 45C17 V/P	07-07 /	**PD/189**	Brembo	**PD/190**	Brembo	
DAILY III Box Body / Estate - 45C18	05-06 /	**PD/189**	Brembo	**PD/190**	Brembo	
DAILY III Box Body / Estate - 50C14 GV / 50C14 GV/P	07-07 /	**PD/189**	Brembo	**PD/190**	Brembo	
DAILY III Box Body / Estate - 50C14 V / 50C14 V/P	07-07 /	**PD/189**	Brembo	**PD/190**	Brembo	
DAILY III Box Body / Estate - 50C15 V / 50C15 V/P	05-06 /	**PD/189**	Brembo	**PD/190**	Brembo	
DAILY III Box Body / Estate - 50C17 V / 50C17 V/P	07-07 /	**PD/189**	Brembo	**PD/190**	Brembo	
DAILY III Box Body / Estate - 50C18 V / 50C18 V/P	05-06 /	**PD/189**	Brembo	**PD/190**	Brembo	
DAILY III Box Body / Estate - 60C15 V	05-06 /	**PD/189**	Brembo	**PD/201**	Brembo	
DAILY III Box Body / Estate - 60C15 V	05-06 /	**PD/189**	Brembo	**PD/190**	Brembo	
DAILY III Box Body / Estate - 60C15 V	05-06 /	**PD/189**	Brembo	**PD/201**	Brembo	
DAILY III Box Body / Estate - 60C17 V / 60C17 V/P	07-07 /	**PD/189**	Brembo	**PD/190**	Brembo	
DAILY III Box Body / Estate - 60C18	05-06 /	**PD/189**	Brembo	**PD/201**	Brembo	
DAILY III Box Body / Estate - 60C18	05-06 /	**PD/189**	Brembo	**PD/190**	Brembo	
DAILY III Box Body / Estate - 60C18	05-06 /	**PD/189**	Brembo	**PD/201**	Brembo	
DAILY III Box Body / Estate - 65C14 V / 65C14 V/P	07-07 /	**PD/189**	Brembo	**PD/190**	Brembo	
DAILY III Box Body / Estate - 65C15	05-06 /	**PD/189**	Brembo	**PD/201**	Brembo	
DAILY III Box Body / Estate - 65C15	05-06 /	**PD/189**	Brembo	**PD/190**	Brembo	
DAILY III Box Body / Estate - 65C15	05-06 /	**PD/189**	Brembo	**PD/201**	Brembo	
DAILY III Box Body / Estate - 65C17 V / 65C17 V/P	07-07 /	**PD/189**	Brembo	**PD/190**	Brembo	
DAILY III Box Body / Estate - 65C18	05-06 /	**PD/189**	Brembo	**PD/201**	Brembo	
DAILY III Box Body / Estate - 65C18	05-06 /	**PD/189**	Brembo	**PD/190**	Brembo	
DAILY III Box Body / Estate - 70C14 V / 70C14 V/P	07-07 /	**PD/189**	Brembo	**PD/190**	Brembo	
DAILY III Box Body / Estate - 70C17V / 70C17 V/P	07-07 /	**PD/189**	Brembo	**PD/190**	Brembo	
DAILY III Bus - 35S14 G	07-09 /	**PD/189**	Brembo			
DAILY III Bus - 35S14 / 35S14 /P	05-06 /	**PD/189**	Brembo			
DAILY III Dumptruck - 35C10 K	05-06 /	**PD/189**	Brembo	**PD/190**	Brembo	
DAILY III Dumptruck - 35C11 K / 35C11 DK / 35S11 K / 35S11 DK	07-07 /	**PD/189**	Brembo	**PD/190**	Brembo	
DAILY III Dumptruck - 35C12	05-06 /	**PD/189**	Brembo	**PD/190**	Brembo	
DAILY III Dumptruck - 35C13 K / 35C13 DK / 35S13 K / 35S13 DK	07-07 /	**PD/189**	Brembo	**PD/190**	Brembo	
DAILY III Dumptruck - 35C14 K / 35C14 DK / 35S14 K / 35S14 DK	07-07 /	**PD/189**	Brembo	**PD/190**	Brembo	
DAILY III Dumptruck - 35C15	05-06 /	**PD/189**	Brembo	**PD/190**	Brembo	
DAILY III Dumptruck - 35C17 K / 35C17 DK / 35S17 K / 35S17 DK	07-07 /	**PD/189**	Brembo	**PD/190**	Brembo	
DAILY III Dumptruck - 35C18	05-06 /	**PD/189**	Brembo	**PD/190**	Brembo	
DAILY III Dumptruck - 35S14 K / 35S14 DK	07-07 /	**PD/189**	Brembo			
DAILY III Dumptruck - 40C14 K / 40C14 DK	07-07 /	**PD/189**	Brembo	**PD/190**	Brembo	
DAILY III Dumptruck - 40C17 K / 40C17 DK	07-07 /	**PD/189**	Brembo	**PD/190**	Brembo	
DAILY III Dumptruck - 50C14 K / 50C14 DK	07-07 /	**PD/189**	Brembo	**PD/190**	Brembo	
DAILY III Dumptruck - 50C15	05-06 /	**PD/189**	Brembo	**PD/190**	Brembo	
DAILY III Dumptruck - 50C17 K / 50C17 DK	07-07 /	**PD/189**	Brembo	**PD/190**	Brembo	
DAILY III Dumptruck - 50C18	05-06 /	**PD/189**	Brembo	**PD/190**	Brembo	

MODEL / *MODELO*	YEAR - *AÑO*	FRONT *DELANTERA*	SYSTEM *SISTEMA*	REAR *TRASERA*	SYSTEM *SISTEMA*	OBS.
IVECO						
DAILY III Dumptruck - 60C14 K / 60C14 DK	07-07 /	**PD/189**	Brembo	**PD/190**	Brembo	
DAILY III Dumptruck - 60C15	05-06 /	**PD/189**	Brembo	**PD/201**	Brembo	
DAILY III Dumptruck - 60C15	05-06 /	**PD/189**	Brembo	**PD/190**	Brembo	
DAILY III Dumptruck - 60C17 K / 60C17 DK	07-07 /	**PD/189**	Brembo	**PD/190**	Brembo	
DAILY III Dumptruck - 60C18	05-06 /	**PD/189**	Brembo	**PD/201**	Brembo	
DAILY III Dumptruck - 60C18	05-06 /	**PD/189**	Brembo	**PD/190**	Brembo	
DAILY III Dumptruck - 65C14 K / 65C14 DK	07-07 /	**PD/189**	Brembo	**PD/190**	Brembo	
DAILY III Dumptruck - 65C17 K / 65C17 DK / 65C17KK	07-07 /	**PD/189**	Brembo	**PD/190**	Brembo	
DAILY III Dumptruck - 70C14 K / 70C14 DK / 70C14 KK	07-07 /	**PD/189**	Brembo	**PD/190**	Brembo	
DAILY III Dumptruck - 70C17 K / 70C17 DK / 70C17 KK	07-07 /	**PD/189**	Brembo	**PD/190**	Brembo	
DAILY III Platform/Chassis - 29L10	05-06 /	**PD/189**	Brembo			
DAILY III Platform/Chassis - 29L12	05-06 /	**PD/189**	Brembo			
DAILY III Platform/Chassis - 29L14	05-06 /	**PD/189**	Brembo			
DAILY III Platform/Chassis - 35C10 / 35S10	05-06 /	**PD/189**	Brembo	**PD/190**	Brembo	
DAILY III Platform/Chassis - 35C11 / 35S11 / 35S11 D / 35S11 /P	07-07 /	**PD/189**	Brembo	**PD/190**	Brembo	
DAILY III Platform/Chassis - 35C12 / 35S12	05-06 /	**PD/189**	Brembo	**PD/190**	Brembo	
DAILY III Platform/Chassis - 35C13 / 35C13 /P / 35S13 D / 35S13 / 35S13 /P	07-07 /	**PD/189**	Brembo	**PD/190**	Brembo	
DAILY III Platform/Chassis - 35C14 G / 35C14 G/P / 35S14 G / 35S14 G/P / 35C14 GD / 35S14 GD	07-07 /	**PD/189**	Brembo	**PD/190**	Brembo	
DAILY III Platform/Chassis - 35C14 / 35C14 /P / 35S14 / 35S14 /P / 35S14 D / 35S14 D/P	07-07 /	**PD/189**	Brembo	**PD/190**	Brembo	
DAILY III Platform/Chassis - 35C14 / 35S14 / 35S14 /P	05-06 /	**PD/189**	Brembo	**PD/190**	Brembo	
DAILY III Platform/Chassis - 35C15	05-06 /	**PD/189**	Brembo	**PD/190**	Brembo	
DAILY III Platform/Chassis - 35C17 / 35C17 /P / 35S17 / 35S17 /P / 35S17 D	07-07 /	**PD/189**	Brembo	**PD/190**	Brembo	
DAILY III Platform/Chassis - 35C18 / 35S18	05-06 /	**PD/189**	Brembo	**PD/190**	Brembo	
DAILY III Platform/Chassis - 35S17 W / 35S17 WD	07-07 /	**PD/189**	Brembo			
DAILY III Platform/Chassis - 40C10	05-06 /	**PD/189**	Brembo	**PD/190**	Brembo	
DAILY III Platform/Chassis - 40C11 / 40C11 D	07-07 /	**PD/189**	Brembo	**PD/190**	Brembo	
DAILY III Platform/Chassis - 40C12	05-06 /	**PD/189**	Brembo	**PD/190**	Brembo	
DAILY III Platform/Chassis - 40C13 / 40C13 /P	07-07 /	**PD/189**	Brembo	**PD/190**	Brembo	
DAILY III Platform/Chassis - 40C14 G / 40C14 G/P	07-07 /	**PD/189**	Brembo	**PD/190**	Brembo	
DAILY III Platform/Chassis - 40C14 / 40C14 /P	07-07 /	**PD/189**	Brembo	**PD/190**	Brembo	
DAILY III Platform/Chassis - 40C15	05-06 /	**PD/189**	Brembo	**PD/190**	Brembo	
DAILY III Platform/Chassis - 40C17 / 40C17 /P	07-07 /	**PD/189**	Brembo	**PD/190**	Brembo	
DAILY III Platform/Chassis - 40C18	05-06 /	**PD/189**	Brembo	**PD/190**	Brembo	
DAILY III Platform/Chassis - 45C14 / 45C14 /P	07-07 /	**PD/189**	Brembo	**PD/190**	Brembo	
DAILY III Platform/Chassis - 45C17 / 45C17 /P	07-07 /	**PD/189**	Brembo	**PD/190**	Brembo	
DAILY III Platform/Chassis - 45C18 / 45C18 /P / 45C18 D / 45C18 D/P	05-06 /	**PD/189**	Brembo	**PD/190**	Brembo	
DAILY III Platform/Chassis - 50C14 G / 50C14 G/P / 50C14 GD / 50C14 GD/P	07-07 /	**PD/189**	Brembo	**PD/190**	Brembo	
DAILY III Platform/Chassis - 50C14 / 50C14 /P	07-07 /	**PD/189**	Brembo	**PD/190**	Brembo	
DAILY III Platform/Chassis - 50C15	05-06 /	**PD/189**	Brembo	**PD/190**	Brembo	
DAILY III Platform/Chassis - 50C17 / 50C17 /P	07-07 /	**PD/189**	Brembo	**PD/190**	Brembo	
DAILY III Platform/Chassis - 50C18	05-06 /	**PD/189**	Brembo	**PD/190**	Brembo	
DAILY III Platform/Chassis - 55S17 W / 55S17 WD	07-07 /	**PD/189**	Brembo			
DAILY III Platform/Chassis - 60C14 / 60C14 /P	07-07 /	**PD/189**	Brembo	**PD/190**	Brembo	
DAILY III Platform/Chassis - 60C15 / 60C15 /P / 60C15 D / 60C15 D/P	05-06 /	**PD/189**	Brembo	**PD/201**	Brembo	
DAILY III Platform/Chassis - 60C15 / 60C15 /P / 60C15 D / 60C15 D/P	05-06 /	**PD/189**	Brembo	**PD/190**	Brembo	
DAILY III Platform/Chassis - 60C17 / 60C17 /P	07-07 /	**PD/189**	Brembo	**PD/190**	Brembo	
DAILY III Platform/Chassis - 60C18	05-06 /	**PD/189**	Brembo	**PD/201**	Brembo	
DAILY III Platform/Chassis - 60C18	05-06 /	**PD/189**	Brembo	**PD/190**	Brembo	
DAILY III Platform/Chassis - 65C14 G / 65C14 G/P / 65C14 GD / 65C14 GD/P	07-07 /	**PD/189**	Brembo	**PD/190**	Brembo	

MODEL / *MODELO*	YEAR - *AÑO*	FRONT *DELANTERA*	SYSTEM *SISTEMA*	REAR *TRASERA*	SYSTEM *SISTEMA*	OBS.
IVECO						
DAILY III Platform/Chassis - 65C14 / 65C14 /P	07-07 /	**PD/189**	Brembo	**PD/190**	Brembo	
DAILY III Platform/Chassis - 65C15 / 65C15 /P / 65C15 D / 65C15 D/P	05-06 /	**PD/189**	Brembo	**PD/201**	Brembo	
DAILY III Platform/Chassis - 65C15 / 65C15 /P / 65C15 D / 65C15 D/P	05-06 /	**PD/189**	Brembo	**PD/190**	Brembo	
DAILY III Platform/Chassis - 65C17 / 65C17 /P	07-07 /	**PD/189**	Brembo	**PD/190**	Brembo	
DAILY III Platform/Chassis - 65C18	05-06 /	**PD/189**	Brembo	**PD/201**	Brembo	
DAILY III Platform/Chassis - 65C18	05-06 /	**PD/189**	Brembo	**PD/190**	Brembo	
DAILY III Platform/Chassis - 70C14 / 70C14 /P	07-07 /	**PD/189**	Brembo	**PD/190**	Brembo	
DAILY III Platform/Chassis - 70C17 / 70C17 /P	07-07 /	**PD/189**	Brembo	**PD/190**	Brembo	
EUROCARGO 100E15 / 100E18 / 100E21	01-91 /	**PD/123**	Meritor	**PD/123**	Meritor	
EUROCARGO 110E15 / 110E18 / 110E23	01-91 / 03-02	**PD/156**	Bendix			
EUROCARGO 120 E 15	98 /	**FD/86**	Master	**FD/87**	Master	
EUROCARGO 120 E15 / 120E18 / 120E23	01-91 / 03-02	**PD/156**	Bendix			
EUROCARGO 130 E15 / 130E18 / 130E23	01-91 / 03-02	**PD/156**	Bendix			
EUROCARGO 140 E 18	99 /	**FD/86**	Master	**FD/88**	Master	
EUROCARGO 140 E15 / 140E18 / 140 E23 / 140E27	01-91 / 03-02	**PD/156**	Bendix			
EUROCARGO 150 E 20	94 /	**FD/87**	Master	**FD/88**	Master	
EUROCARGO 160 E 23	94 /	**FD/87**	Master	**FD/88**	Master	
EUROCARGO 170 E 21	04 /	**FD/87**	Master	**FD/88**	Master	
EUROCARGO 170 E27	94 /	**PD/128**	Bendix			
EUROCARGO 170E18 / 170E23 / 170E27	01-94 / 06-98	**PD/128**	Bendix			
EUROCARGO 175 E24 / E27	91 / 98	**PD/128**	Bendix			
EUROCARGO 175 E24 / E27	98 /	**PD/116**	Knorr			
EUROCARGO 176 E30 / E34	91 / 98	**PD/128**	Bendix			
EUROCARGO 176 E30 / E34	98 /	**PD/116**	Knorr			
EUROCARGO 179 E24 / E27 / E30	91 / 98	**PD/128**	Bendix			
EUROCARGO 179 E24 / E27 / E30	98 /	**PD/116**	Knorr			
EUROCARGO 180 E27	94 /	**PD/128**	Bendix			
EUROCARGO 180E21	01-91 /	**PD/123**	Meritor	**PD/123**	Meritor	
EUROCARGO 230 E 24	09 /	**FD/87**	Master	**FD/88**	Master	
EUROCARGO 320 E 18	99 /	**FD/86**	Master	**FD/88**	Master	
EUROCARGO 325 E27 / 390 E30 / 390 E34	91 /	**PD/128**	Bendix			
EUROCARGO 400 E-34	92 /	**PD/128**	Bendix			Europeo
EUROCARGO 400 E-38	92 /	**PD/128**	Bendix			Europeo
EUROCARGO 400 E-42	92 /	**PD/128**	Bendix			Europeo
EUROCARGO 60E10 / 60E12 / 60E14 / 65E10 / 65E12 / 65E14 / 75E12 / 75E14 / 75E15	01-91 / 12-96	**PD/355**	Meritor	**PD/355**	Meritor	
EUROCARGO 6X2	05 /	**FD/87**	Master	**FD/88**	Master	3º eixo FD/88
EUROCARGO 75E12 / 75E14 / 75E15	01-97 /	**PD/139**	Brembo	**PD/139**	Brembo	
EUROCARGO 80E15 / 80E18 / 80E21	01-91 /	**PD/123**	Meritor	**PD/123**	Meritor	
EUROCARGO 95E15 W / 95E21 W	11-93 / 12-96	**PD/355**	Meritor	**PD/355**	Meritor	
EUROCARGO 95E15 W / 95E21 W	01-97 /	**PD/123**	Meritor	**PD/123**	Meritor	
EUROCARGO TECTOR 100 SERIES	09-00 /	**PD/123**	Meritor	**PD/123**	Meritor	
EUROCARGO TECTOR 120 SERIES	00 /	**PD/124**	Wabco	**PD/124**	Wabco	
EUROCARGO TECTOR 130 / 140 / 150 / 180 SERIES	00 /	**PD/120**	Knorr	**PD/120**	Knorr	
EUROCARGO TECTOR 320 SERIES	00 /	**PD/120**	Knorr	**PD/120**	Knorr	
EUROCARGO TECTOR 65 SERIES	09-00 /	**PD/139**	Brembo	**PD/139**	Brembo	
EUROCARGO TECTOR 75 SERIES	09-00 /	**PD/139**	Brembo	**PD/139**	Brembo	
EUROCARGO TECTOR 80 SERIES	09-00 /	**PD/139**	Brembo	**PD/139**	Brembo	
EUROCARGO TECTOR 90 SERIES	09-00 /	**PD/139**	Brembo	**PD/139**	Brembo	
EUROSTAR LD 190	93 / 96	**PD/128**	Bendix	**PD/128**	Bendix	
EUROSTAR LD 190	97 / 02	**PD/116**	Knorr	**PD/116**	Knorr	
EUROSTAR LD 190 E38 / E42 / E47 / E52 4x2	93 / 96	**PD/128**	Bendix	**IV/159**	Meritor	
EUROSTAR LD 190 E 38 P	01-93 / 02-02	**19263/343 00**			19263/343 00	

MODEL / *MODELO*	YEAR - *AÑO*	FRONT *DELANTERA*	SYSTEM *SISTEMA*	REAR *TRASERA*	SYSTEM *SISTEMA*	OBS.
IVECO						
EUROSTAR LD 190 E 42, LD 190 E 42 P	01-93 / 02-02	**19263/343 00**			19263/343 00	
EUROSTAR LD 190 E 47	01-93 / 02-02	**19263/343 00**			19263/343 00	
EUROSTAR LD 190 E 52	01-93 / 02-02	**19263/343 00**			19263/343 00	
EUROSTAR LD 240 E 38 6x2	01-93 / 02-02			**RW/28/30/31/1**	Rockwell	
EUROSTAR LD 240 E 42 FS / LD 240 E 42 OS 6x2	01-93 / 02-02			**RW/28/30/31/1**	Rockwell	
EUROSTAR LD 240 E 47 P 6x2	01-93 / 02-02			**RW/28/30/31/1**	Rockwell	
EUROSTAR LD 240 E 52 P 6x2	01-93 / 02-02			**RW/28/30/31/1**	Rockwell	
EUROSTAR LD 240 E38 / E42 / E47 P/ E52 P6x2	93 / 96	**PD/128**	Bendix	**IV/159**	Meritor	
EUROSTAR LD 240 E38 / E42 / E47 P/ E52 P6x2	96 /	**PD/128**	Bendix	**IV/160**	Meritor	
EUROSTAR LD 240 E38 / E42 / E47 P/ E52 P 6x4	93 / 96	**PD/128**	Bendix	**IV/159**	Meritor	
EUROSTAR LD 240 E38 / E42 / E47 P/ E52 P6x4	96 /	**PD/128**	Bendix	**IV/160**	Meritor	
EUROSTAR LD 240 / 260	93 / 96	**PD/128**	Bendix			
EUROSTAR LD 240 / 260	97 / 02	**PD/116**	Knorr			
EUROSTAR LD 240 E 38	01-93 / 02-02	**19263/343 00**			19263/343 00	
EUROSTAR LD 240 E 42 FS, LD 240 E 42 OS	01-93 / 02-02	**19263/343 00**			19263/343 00	
EUROSTAR LD 240 E 47 OS	01-93 / 02-02	**19263/343 00**			19263/343 00	
EUROSTAR LD 240 E 52 OS	01-93 / 02-02	**19263/343 00**			19263/343 00	
EUROSTAR LD 260	97 / 02	**PD/116**	Knorr	**PD/116**	Knorr	
EUROSTAR LD 260 E 39 P / LD 260 E 39 FP 6x2	11-99 / 02-02			**RW/28/30/31/1**	Rockwell	
EUROSTAR LD 260 E 40 6x2	09-00 / 02-02			**RW/28/30/31/1**	Rockwell	
EUROSTAR LD 260 E 43 Y/PS / LD 260 E 43 FP 6x2	01-93 / 02-02			**RW/28/30/31/1**	Rockwell	
EUROSTAR LD 260 E 48 Y/OS 6x2	01-93 / 02-02			**RW/28/30/31/1**	Rockwell	
EUROSTAR LD 260 E38 P / E42 P / E47 / E52 6x4	94 / 96	**PD/128**	Bendix	**IV/159**	Meritor	
EUROSTAR LD 260 E38 P / E42 P / E47 / E52 6x4	96 /	**PD/128**	Bendix	**IV/160**	Meritor	
EUROSTAR LD 260 E 38 P	01-93 / 02-02	**19263/343 00**			19263/343 00	
EUROSTAR LD 260 E 42 P	01-93 / 02-02	**19263/343 00**			19263/343 00	
EUROSTAR LD 260 E 43 Y/PS, LD 260 E 43 FP	01-93 / 02-02	**19263/343 00**			19263/343 00	
EUROSTAR LD 260 E 47	01-93 / 02-02	**19263/343 00**			19263/343 00	
EUROSTAR LD 260 E 52	01-93 / 02-02	**19263/343 00**			19263/343 00	
EUROSTAR LD 400 E 38 TXP /LD 440 E 38 TXP 6x2	01-93 / 02-02			**RW/28/30/31/1**	Rockwell	
EUROSTAR LD 400 E 42 TXP /LD 440 E 42 TXP 6x2	01-93 / 02-02			**RW/28/30/31/1**	Rockwell	
EUROSTAR LD 400 E38 TXP / E42 TXP 6x2	94 / 96	**PD/128**	Bendix	**IV/159**	Meritor	
EUROSTAR LD 400 E38 TXP / E42 TXP 6x2	96 /	**PD/128**	Bendix	**IV/160**	Meritor	
EUROSTAR LD 400 E38 TXP / E42 TXP 6x4	94 / 96	**PD/128**	Bendix	**IV/159**	Meritor	
EUROSTAR LD 400 E38 TXP / E42 TXP 6x4	96 /	**PD/128**	Bendix	**IV/160**	Meritor	
EUROSTAR LD 400 / 440	93 / 96	**PD/128**	Bendix			
EUROSTAR LD 400 / 440	97 / 02	**PD/116**	Knorr			
EUROSTAR LD 400 E 38 TX/P,LD 440 E 38 TX/P	01-93 / 02-02	**19263/343 00**			19263/343 00	
EUROSTAR LD 400 E 42 TX/P,LD 440 E 42 TX/P	01-93 / 02-02	**19263/343 00**			19263/343 00	
EUROSTAR LD 440	97 / 02	**PD/116**	Knorr	**PD/116**	Knorr	
EUROSTAR LD 440 E 6x2	01-01 / 02-02			**RW/28/30/31/1**	Rockwell	
EUROSTAR LD 440 E 39 TX / LD 440 E 39 TX/P 6x2	11-99 / 02-02			**RW/28/30/31/1**	Rockwell	
EUROSTAR LD 440 E 43 TX/P 6x2	11-99 / 02-02			**RW/28/30/31/1**	Rockwell	
EUROSTAR LD 440 E38 T / E42 T / E47 T / E52 T 4x2	93 / 96	**PD/128**	Bendix	**IV/159**	Meritor	
EUROSTAR LD 440 E38 T / E42 T / E47 T / E52 T 4x2	96 /	**PD/128**	Bendix	**IV/160**	Meritor	
EUROSTAR LD 440 E38 TX / E42 TX 6x2	94 / 96	**PD/128**	Bendix	**IV/159**	Meritor	
EUROSTAR LD 440 E38 TX / E42 TX 6x2	96 /	**PD/128**	Bendix	**IV/160**	Meritor	
EUROSTAR LD 440 E38 TX / E42 TX 6x4	94 / 96	**PD/128**	Bendix	**IV/159**	Meritor	
EUROSTAR LD 440 E38 TX / E42 TX 6x4	96 /	**PD/128**	Bendix	**IV/160**	Meritor	
EUROSTAR LD 440 E38 TZ / E42 TZ / R52 TZ 6x4	93 / 96	**PD/128**	Bendix	**IV/159**	Meritor	
EUROSTAR LD 440 E38 TZ / E42 TZ / R52 TZ 6x4	96 /	**PD/128**	Bendix	**IV/160**	Meritor	
EUROSTAR LD 440 E 38 T	01-93 / 02-02	**19263/343 00**			19263/343 00	
EUROSTAR LD 440 E 38 TZ	01-93 / 02-02	**19263/343 00**			19263/343 00	
EUROSTAR LD 440 E 40 TX/P	01-01 / 02-02	**19263/343 00**			19263/343 00	

MODEL / *MODELO*	YEAR - *AÑO*	FRONT *DELANTERA*	SYSTEM *SISTEMA*	REAR *TRASERA*	SYSTEM *SISTEMA*	OBS.
IVECO						
EUROSTAR LD 440 E 42 T/P	01-93 / 02-02	**19263/343 00**			19263/343 00	
EUROSTAR LD 440 E 42 TZ	01-93 / 02-02	**19263/343 00**			19263/343 00	
EUROSTAR LD 440 E 43 T/P	01-93 / 02-02	**19263/343 00**			19263/343 00	
EUROSTAR LD 440 E 47 T/P	01-93 / 02-02	**19263/343 00**			19263/343 00	
EUROSTAR LD 440 E 47 TZ	01-93 / 02-02	**19263/343 00**			19263/343 00	
EUROSTAR LD 440 E 52 T	01-93 / 02-02	**19263/343 00**			19263/343 00	
EUROSTAR LD 440 E 52 TZ	01-93 / 02-02	**19263/343 00**			19263/343 00	
EUROTECH 200 E 37	06-05 /	**4514-G**	Master	**CA/32**	Master	
EUROTECH 260 E 39 Y / 260 E 39 Y/P / 260 E 39 Y/FP / 260 E 39 Y/FS 6x2	11-99 /			**RW/28/30/31/1**	Rockwell	
EUROTECH 260 E 40 Y/P 6x2	01-01 /			**RW/28/30/31/1**	Rockwell	
EUROTECH 260 E 43 Y / 260 E 43 Y/P+A3166 6x2	11-99 /			**RW/28/30/31/1**	Rockwell	
EUROTECH 400 E 38 T / 440 E 38 T / 440 E 38 T /P 4x2	01-92 /			**RW/28/30/31/1**	Rockwell	
EUROTECH 400 E 42 T / 440 E 42 T / 440 E 42 T/P 4x2	01-92 /			**RW/28/30/31/1**	Rockwell	
EUROTECH 440 E 39 T / 440 E 39 T/P / 440 E 39 T/ FP-CT 4x2	11-99 /			**RW/28/30/31/1**	Rockwell	
EUROTECH 440 E 40 T 4x2	09-00 /			**RW/28/30/31/1**	Rockwell	
EUROTECH 440 E 40 TX/P 6x2	01-01 /			**RW/28/30/31/1**	Rockwell	
EUROTECH 440 E 43 T / 440 E 43 T/P 4x2	11-99 /			**RW/28/30/31/1**	Rockwell	
EUROTECH 450 E 37 / HR	06-05 /	**4514-G**	Master	**CA/32**	Master	
EUROTECH 450 E 41	96 /	**4514-G**	Master	**CA/32**	Master	
EUROTECH CURSOR 190 E 31	05-99 /	**4514-G**	Master	**CA/32**	Master	Argent.
EUROTECH CURSOR 450 E 31	05-99 /	**4514-G**	Master	**CA/32**	Master	Argent.
EUROTECH MH CURSOR	98 /	**PD/116**	Knorr	**PD/116**	Knorr	
EUROTECH MP 180	92 / 93	**PD/128**	Bendix			
EUROTECH MP 180 E34 / E38 / E42 / E52 4x2	92 / 93	**PD/128**	Bendix	**IV/159**	Meritor	
EUROTECH MP 190	93 / 96	**PD/128**	Bendix			
EUROTECH MP 190 E34 / E38 / E42 / E52 4x2	93 / 96	**PD/128**	Bendix	**IV/159**	Meritor	
EUROTECH MP 190 E34 / E38 / E42 / E52 4x2	96 /	**PD/128**	Bendix	**IV/160**	Meritor	
EUROTECH MP 190 E 34	01-93 /	**19263/343 00**		**19263/343 00**		
EUROTECH MP 190 E 38	01-93 /	**19263/343 00**		**19263/343 00**		
EUROTECH MP 190 E 39, 190 E 39 /P, 190 E39 /FP	11-99 /	**19263/343 00**		**19263/343 00**		
EUROTECH MP 190 E 40 /P	01-01 /	**19263/343 00**		**19263/343 00**		
EUROTECH MP 190 E 42, 190 E 42 /P	01-93 /	**19263/343 00**		**19263/343 00**		
EUROTECH MP 240 / MP 440	93 /	**PD/128**	Bendix			Europeo
EUROTECH MP 240 E 30 OS 6x2	01-97 /			**RW/28/30/31/1**	Rockwell	
EUROTECH MP 240 E 34 6x2	09-95 / 12-96			**RW/28/30/31/1**	Rockwell	
EUROTECH MP 240 E 38 6x2	01-92 /			**RW/28/30/31/1**	Rockwell	
EUROTECH MP 240 E 42 6x2	01-92 /			**RW/28/30/31/1**	Rockwell	
EUROTECH MP 240 E30 / E34 / E38 / E42 / E52 6x2	92 / 96	**PD/128**	Bendix	**IV/159**	Meritor	
EUROTECH MP 240 E30 / E34 / E38 / E42 / E52 6x2	96 /	**PD/128**	Bendix	**IV/160**	Meritor	
EUROTECH MP 240 / 260	92 / 96	**PD/128**	Bendix			
EUROTECH MP 240 / 260	97 /	**PD/116**	Knorr			
EUROTECH MP 240 E 30 OS	01-97 /	**19263/343 00**		**19263/343 00**		
EUROTECH MP 240 E 34	09-95 / 12-96	**19263/343 00**		**19263/343 00**		
EUROTECH MP 240 E 38	01-92 /	**19263/343 00**		**19263/343 00**		
EUROTECH MP 240 E 42	01-92 /	**19263/343 00**		**19263/343 00**		
EUROTECH MP 260 E 38 P 6x4	01-94 /			**RW/28/30/31/1**	Rockwell	
EUROTECH MP 260 E 42 6x4	01-94 /			**RW/28/30/31/1**	Rockwell	
EUROTECH MP 260 E38 / E42 6x4	92 / 96	**PD/128**	Bendix	**IV/159**	Meritor	
EUROTECH MP 260 E38 / E42 6x4	96 /	**PD/128**	Bendix	**IV/160**	Meritor	
EUROTECH MP 260 E 38 P	01-94 /	**19263/343 00**		**19263/343 00**		
EUROTECH MP 260 E 39 Y, 260 E 39 Y/P, 260 E 39 Y/FP, 260 E 39 Y/FS	11-99 /	**19263/343 00**		**19263/343 00**		
EUROTECH MP 260 E 40	01-01 /	**19263/343 00**		**19263/343 00**		

MODEL / *MODELO*	YEAR - *AÑO*	FRONT *DELANTERA*	SYSTEM *SISTEMA*	REAR *TRASERA*	SYSTEM *SISTEMA*	OBS.
IVECO						
EUROTECH MP 260 E 42	01-94 /	**19263/343 00**		**19263/343 00**		
EUROTECH MP 260 E 43 Y, 260 E 43 Y/P	11-99 /	**19263/343 00**		**19263/343 00**		
EUROTECH MP 400 E 34 T /MP 440 E 34 T 4x2	01-92 /			**RW/28/30/31/1**	Rockwell	
EUROTECH MP 400 E 38 TXP 6x2	11-93 / 12-96			**RW/28/30/31/1**	Rockwell	
EUROTECH MP 400 E34 6x2 / 6x4	96 /	**PD/128**	Bendix	**IV/160**	Meritor	
EUROTECH MP 400 E34 / E38 6x2	92 / 96	**PD/128**	Bendix	**IV/159**	Meritor	
EUROTECH MP 400 E34 / E38 6x4	92 / 96	**PD/128**	Bendix	**IV/159**	Meritor	
EUROTECH MP 400 E34 / E38 / E42 / E52 4x2	92 / 96	**PD/128**	Bendix	**IV/159**	Meritor	
EUROTECH MP 400 E34 / E38 / E42 / E52 4x2	96 /	**PD/128**	Bendix	**IV/160**	Meritor	
EUROTECH MP 400 / 440	92 / 96	**PD/128**	Bendix	**PD/128**	Bendix	
EUROTECH MP 400 / 440	97 /	**PD/116**	Knorr	**PD/116**	Knorr	
EUROTECH MP 400 E 34 T, 440 E 34 T	01-92 /	**19263/343 00**		**19263/343 00**		
EUROTECH MP 400 E 38 T, 440 E 38 T, 440 E 38 T /P	01-92 /	**19263/343 00**		**19263/343 00**		
EUROTECH MP 400 E 38 TXP	11-93 / 12-96	**19263/343 00**		**19263/343 00**		
EUROTECH MP 440 E 39 TX/P 6x2	11-99 /			**RW/28/30/31/1**	Rockwell	
EUROTECH MP 440 E34 / E38 / E42 4x2	92 / 96	**PD/128**	Bendix	**IV/159**	Meritor	
EUROTECH MP 440 E34 / E38 / E42 4x2	96 /	**PD/128**	Bendix	**IV/160**	Meritor	
EUROTECH MP 440 E 38 TZ	01-93 /	**19263/343 00**		**19263/343 00**		
EUROTECH MP 440 E 39 T, 440 E 39 T/P, 440 E 39 T/ FP-CT	11-99 /	**19263/343 00**		**19263/343 00**		
EUROTECH MP 440 E 39 TX/P	11-99 /	**19263/343 00**		**19263/343 00**		
EUROTECH MP 440 E 40 T/P	09-00 /	**19263/343 00**		**19263/343 00**		
EUROTECH MP 440 E 40 TX/P	01-01 /	**19263/343 00**		**19263/343 00**		
EUROTECH MP 400 E 42 T, 440 E 42 T, 440 E 42 T/P	01-92 /	**19263/343 00**		**19263/343 00**		
EUROTECH MP 440 E 42 TZ	01-93 /	**19263/343 00**		**19263/343 00**		
EUROTECH MP 440 E 43 T, 440 E 43 T/P	11-99 /	**19263/343 00**		**19263/343 00**		
EUROTECH MT 180 / MT 190	93 /	**PD/128**	Bendix			Europeo
EUROTECH MT 180 E24 / E27 / E30 / E34 4x2	92 / 96	**PD/128**	Bendix			
EUROTECH MT 180 E24 / E27 / E30 / E34 4x2	92 / 96	**PD/116**	Knorr			
EUROTECH MT 180 / 190	92 / 96	**PD/128**	Bendix	**PD/128**	Bendix	
EUROTECH MT 180 / 190	97 / 98	**PD/116**	Knorr	**PD/116**	Knorr	
EUROTECH MT 190 E24 / E27 / E30 4x2	97 / 98	**PD/128**	Bendix			
EUROTECH MT 190 E24 / E27 / E30 4x2	97 / 98	**PD/116**	Knorr			
EUROTECH MT 400	92 / 96	**PD/128**	Bendix	**PD/128**	Bendix	
EUROTECH MT 400	97 / 98	**PD/116**	Knorr	**PD/116**	Knorr	
EUROTECH MT 400 E 30 T	01-92 / 08-98	**19263/343 00**		**19263/343 00**		
EUROTECH MT 400 E 34 T	01-92 / 08-98	**19263/343 00**		**19263/343 00**		
EUROTRAKKER	05-99 /	**4514-G**	Master	**CA/32**	Master	
EUROTRAKKER CURSOR 190 E 31	99 /	**4514-G**	Master	**CA/32**	Master	
EUROTRAKKER MP 190 E30 / E34 / E37 / E42 4x2 / 4x4	93 / 96	**IV/159**	Meritor	**IV/159**	Meritor	
EUROTRAKKER MP 190 E30 / E34 / E37 / E42 4x2 / 4x4	96 /	**IV/160**	Meritor	**IV/160**	Meritor	
EUROTRAKKER MP 190 E 30 H	01-93 / 11-04	**19263/343 00**		**19263/343 00**		
EUROTRAKKER MP 190 E 30 W	01-93 / 11-04	**19263/343 00**		**19263/343 00**		
EUROTRAKKER MP 190 E 34 H	01-93 / 11-04	**19263/343 00**		**19263/343 00**		
EUROTRAKKER MP 190 E 34 W	01-93 / 11-04	**19263/343 00**		**19263/343 00**		
EUROTRAKKER MP 190 E 37 H	01-93 / 11-04	**19263/343 00**		**19263/343 00**		
EUROTRAKKER MP 190 E 37 W	01-93 / 11-04	**19263/343 00**		**19263/343 00**		
EUROTRAKKER MP 190 E 42 H	01-93 / 11-04	**19263/343 00**		**19263/343 00**		
EUROTRAKKER MP 190 E 42 W	01-93 / 11-04	**19263/343 00**		**19263/343 00**		
EUROTRAKKER 200 E 41 H	96 /	**4514-G**	Master	**CA/32**	Master	
EUROTRAKKER MP 260 E30 6x4	93 / 96	**IV/159**	Meritor	**IV/159**	Meritor	
EUROTRAKKER MP 260 E30 6x4	96 /	**IV/160**	Meritor	**IV/160**	Meritor	
EUROTRAKKER MP 260 E34 / E37 / E42 6x4 / 6x6	93 / 96	**IV/159**	Meritor	**IV/159**	Meritor	
EUROTRAKKER MP 260 E34 / E37 / E42 6x4 / 6x6	96 /	**IV/160**	Meritor	**IV/160**	Meritor	

MODEL / *MODELO*	YEAR - *AÑO*	FRONT *DELANTERA*	SYSTEM *SISTEMA*	REAR *TRASERA*	SYSTEM *SISTEMA*	OBS.
IVECO						
EUROTRAKKER MP 260 E 30 H	01-93 / 11-04	**19263/343 00**		**19263/343 00**		
EUROTRAKKER MP 260 E 34 H	01-93 / 11-04	**19263/343 00**		**19263/343 00**		
EUROTRAKKER MP 260 E 34 W	01-93 / 11-04	**19263/343 00**		**19263/343 00**		
EUROTRAKKER MP 260 E 37 H	01-93 / 11-04	**19263/343 00**		**19263/343 00**		
EUROTRAKKER MP 260 E 37 W	01-93 / 11-04	**19263/343 00**		**19263/343 00**		
EUROTRAKKER MP 260 E 42 H	01-93 / 11-04	**19263/343 00**		**19263/343 00**		
EUROTRAKKER MP 260 E 42 W	01-93 / 11-04	**19263/343 00**		**19263/343 00**		
EUROTRAKKER MP 340 E34 / E37 / E42 8x4	94 / 96	**IV/159**	Meritor	**IV/159**	Meritor	
EUROTRAKKER MP 340 E34 / E37 / E42 8x4	96 /	**IV/160**	Meritor	**IV/160**	Meritor	
EUROTRAKKER MP 340 E 34 H	01-93 / 11-04	**19263/343 00**		**19263/343 00**		
EUROTRAKKER MP 340 E 37 H	01-93 / 11-04	**19263/343 00**		**19263/343 00**		
EUROTRAKKER MP 340 E 42 H	01-93 / 11-04	**19263/343 00**		**19263/343 00**		
EUROTRAKKER MP 380 E34 / E37 / E42 6x4	93 / 96	**IV/159**	Meritor	**IV/159**	Meritor	
EUROTRAKKER MP 380 E34 / E37 / E42 6x4	96 /	**IV/160**	Meritor	**IV/160**	Meritor	
EUROTRAKKER MP 380 E37 / E42 6x6	93 / 96	**IV/159**	Meritor	**IV/159**	Meritor	
EUROTRAKKER MP 380 E37 / E42 6x6	96 /	**IV/160**	Meritor	**IV/160**	Meritor	
EUROTRAKKER MP 380 E 34 H	01-93 / 11-04	**19263/343 00**		**19263/343 00**		
EUROTRAKKER MP 380 E 37 H	01-93 / 11-04	**19263/343 00**		**19263/343 00**		
EUROTRAKKER MP 380 E 37 W	01-93 / 11-04	**19263/343 00**		**19263/343 00**		
EUROTRAKKER MP 380 E 42 H	01-93 / 11-04	**19263/343 00**		**19263/343 00**		
EUROTRAKKER MP 380 E 42 W	01-93 / 11-04	**19263/343 00**		**19263/343 00**		
EUROTRAKKER MP 400 E34 / E37 / E42 4x2 / 4x4	93 / 96	**IV/159**	Meritor	**IV/159**	Meritor	
EUROTRAKKER MP 400 E34 / E37 / E42 4x2 / 4x4	96 /	**IV/160**	Meritor	**IV/160**	Meritor	
EUROTRAKKER MP 400 E 34 HT	01-93 / 11-04	**19263/343 00**		**19263/343 00**		
EUROTRAKKER MP 400 E 37 HT	01-93 / 11-04	**19263/343 00**		**19263/343 00**		
EUROTRAKKER MP 400 E 37 WT	01-93 / 11-04	**19263/343 00**		**19263/343 00**		
EUROTRAKKER MP 400 E 42 HT	01-93 / 11-04	**19263/343 00**		**19263/343 00**		
EUROTRAKKER MP 400 E 42 WT	01-93 / 11-04	**19263/343 00**		**19263/343 00**		
EUROTRAKKER MP 410 E37 / E42 8x4 / 8x8	94 / 96	**IV/159**	Meritor	**IV/159**	Meritor	
EUROTRAKKER MP 410 E37 / E42 8x4 / 8x8	96 /	**IV/160**	Meritor	**IV/160**	Meritor	
EUROTRAKKER MP 410 E 37 H	01-93 / 11-04	**19263/343 00**		**19263/343 00**		
EUROTRAKKER MP 410 E 42 H	01-93 / 11-04	**19263/343 00**		**19263/343 00**		
EUROTRAKKER MP 410 E 42 W	01-93 / 11-04	**19263/343 00**		**19263/343 00**		
EUROTRAKKER MP 440 E34 / E37 / E42 6x4	93 / 96	**IV/159**	Meritor	**IV/159**	Meritor	
EUROTRAKKER MP 440 E34 / E37 / E42 6x4	96 /	**IV/160**	Meritor	**IV/160**	Meritor	
EUROTRAKKER MP 440 E 34 HT	01-93 / 11-04	**19263/343 00**		**19263/343 00**		
EUROTRAKKER MP 440 E 37 HT	01-93 / 11-04	**19263/343 00**		**19263/343 00**		
EUROTRAKKER MP 440 E 42 HT	01-93 / 11-04	**19263/343 00**		**19263/343 00**		
EUROTRAKKER 450 E 31 T	99 /	**4514-G**	Master	**CA/32**	Master	
EUROTRAKKER 450 E 41 HT	96 /	**4514-G**	Master	**CA/32**	Master	
EUROTRAKKER MP 720 E37 6x4/6x6	94 / 96	**IV/159**	Meritor	**IV/159**	Meritor	
EUROTRAKKER MP 720 E37 6x4/6x6	96 /	**IV/160**	Meritor	**IV/160**	Meritor	
EUROTRAKKER MP 720 E42 6x4/6x6	97 /	**IV/160**	Meritor	**IV/160**	Meritor	
EUROTRAKKER MP 720 E47 6x4	98 /	**IV/160**	Meritor	**IV/160**	Meritor	
EUROTRAKKER MP 720 E 37 HT	01-93 / 11-04	**19263/343 00**		**19263/343 00**		
EUROTRAKKER MP 720 E 37 WT	01-93 / 11-04	**19263/343 00**		**19263/343 00**		
EUROTRAKKER MP 720 E 42 HT	01-93 / 11-04	**19263/343 00**		**19263/343 00**		
EUROTRAKKER MP 720 E 42 WT	01-93 / 11-04	**19263/343 00**		**19263/343 00**		
EUROTRAKKER MP 720 E 47 HT	01-93 / 11-04	**19263/343 00**		**19263/343 00**		
IRISBUS - DAILY TOURYS - 16,19	11-06 /			**PD/201**	Brembo	
SCUDATO	01 /	**PD/339-A**	Perrot			
SCUDATO 59.12	01 /	**PD/339-A**	Perrot	**IV/158**	Perrot	
STRALIS 570 S 38T	09 /	**4514-G**	Master	**CA/32**	Master	3° eixo **CA/33**
STRALIS 570 S 42T	09 /	**4514-G**	Master	**CA/32**	Master	3° eixo **CA/33**

MODEL / *MODELO*	YEAR - *AÑO*	FRONT *DELANTERA*	SYSTEM *SISTEMA*	REAR *TRASERA*	SYSTEM *SISTEMA*	OBS.
IVECO						
STRALIS 570 S 42TZ	07 /	**4514-G**	Master	**CA/32**	Master	3° eixo **CA/33**
STRALIS 6X2	06 /	**4514-G**	Master	**CA/32**	Master	3º eixo **CA/32-A**
STRALIS 6X4 (Italian Axle)	09-07 /	**4514-G**	Master	**CA/32**	Master	3º eixo **CA/32**
STRALIS AS 260 / AS440	02 /	**PD/116**	Knorr	**PD/116**	Knorr	
STRALIS HD 200 S 38	04 /	**4514-G**	Master	**CA/32**	Master	
STRALIS HD 450 S 38	04 /	**4514-G**	Master	**CA/32**	Master	
TECTOR 170E25 4X2		**FD/87**	Master	**FD/88**	Master	
TECTOR 240E25 6X2		**FD/87**	Master	**FD/88**	Master	3° eixo **FD/88**
TECTOR 260E25 6X4		**FD/87**	Master	**FD/88**	Master	
TECTOR 260E28 6X2		**FD/87**	Master	**FD/88**	Master	
TECTOR 260E28 6X4		**FD/87**	Master	**FD/88**	Master	3° eixo **FD/88**
VERTIS 130V 18		**FD/86**	Master	**FD/87**	Master	
VERTIS 90V 16		**FD/59**	Master	**FD/59**	Master	
Z450T	87 / 88	**PD/123**				
ZETA 109-14	88 / 90	**PD/123**	Meritor			
ZETA 65-12	87 / 90	**PD/123**	Meritor			
ZETA 65-12	87 / 90	**PD/148-A**	Wabco			
ZETA 79-10 / 79-12 / 79-13 / 79-14	87 / 90	**PD/123**	Meritor			
ZETA 79-10 / 79-12 / 79-13 / 79-14	87 / 90	**PD/148-A**	Wabco			
ZETA 79-10 / 79-14	83 / 87	**PD/148**	Wabco			
ZETA 79-14	02-92 / 10-92	**PD/193-A**	Wabco			
ZETA 95-14	88 / 90	**PD/123**	Meritor			
IVECO TRUCKS						
130 NR / NT	73 /	**17481 00**		**19072 00**		
130 NT / 14 & NT / 20	78 /	**17481 00**		**19072 00**		
135.14 4x2	84 /	**19384/385 00**		**19384/385 00**		
150.16 AN Turbo / ANW Turbo	87 /	**19384/385 00**		**19384/385 00**		
159.17 4x2	84 / 90	**19384/385 00**		**19384/385 00**		
159.20 / 150.20 A / 159.20T / 165.24	80 / 90	**19384/385 00**		**19384/385 00**		
170 E27	01-94 /	**19384/385 00**		**19384/385 00**		
170 F26 / T26 / F35 / F35T	81 / 91	**19384/385 00**		**19384/385 00**		
170 F30 T	81 / 91	**19384/385 00**		**19384/385 00**		
175 E24	91 / 06-98	**19384/385 00**		**19384/385 00**		
175 E24	07-98 /	**19384/385 00**		**19384/385 00**		
175 E27	91 / 06-98	**19384/385 00**		**19384/385 00**		
175 E27	07-98 /	**19384/385 00**		**19384/385 00**		
175.17 / 175.24 4x2	87 / 92	**19384/385 00**		**19384/385 00**		
176 E30	91 / 06-98	**19384/385 00**		**19384/385 00**		
176 E30	07-98 /	**19384/385 00**		**19384/385 00**		
176 E34	91 / 06-98	**19384/385 00**		**19384/385 00**		
176 E34	07-98 /	**19384/385 00**		**19384/385 00**		
179 E24	91 / 06-98	**19384/385 00**		**19384/385 00**		
179 E24	07-98 /	**19384/385 00**		**19384/385 00**		
179 E27	91 / 06-98	**19384/385 00**		**19384/385 00**		
179 E27	07-98 /	**19384/385 00**		**19384/385 00**		
179 E30	91 / 06-98	**19384/385 00**		**19384/385 00**		
179 E30	07-98 /	**19384/385 00**		**19384/385 00**		
180 E27	01-94 /	**19384/385 00**		**19384/385 00**		
190 F26 / FT26 / F35 / F35T	/ 91	**19384/385 00**		**19384/385 00**		
190 PAC20 & 26	78 / 91	**19384/385 00**		**19384/385 00**		
190 PAT26	/ 91	**19384/385 00**		**19384/385 00**		
190 PC26 4x2 / PT 26 4x2	/ 91	**19384/385 00**		**19384/385 00**		
190 PC26 4x4	/ 91	**19384/385 00**		**19384/385 00**		
190 PC35 / PT35 4x2	/ 91	**19384/385 00**		**19384/385 00**		

MODEL / *MODELO*	YEAR - *AÑO*	FRONT *DELANTERA*	SYSTEM *SISTEMA*	REAR *TRASERA*	SYSTEM *SISTEMA*	OBS.
IVECO TRUCKS						
190.25 4x2	87 / 91	**19384/385 00**		**19384/385 00**		
190.29 Turbo 4x2	82 / 91	**19384/385 00**		**19384/385 00**		
190.30 T 6x2 / 6x4	82 / 92	**19384/385 00**		**19384/385 00**		
190.30 / 190.30T	82 / 92	**19384/385 00**		**19384/385 00**		
190.32 4x2	89 / 92	**19384/385 00**		**19384/385 00**		
190.33 T TurboStar	84 / 92	**19384/385 00**		**19384/385 00**		
190.36 TurboStar	87 / 92	**19384/385 00**		**19384/385 00**		
190.38 Turbo / T Turbo	82 / 91	**19384/385 00**		**19384/385 00**		
190.42 T TurboStar	84 / 92	**19384/385 00**		**19384/385 00**		
190.44 T TurboStar	86 / 92	**19384/385 00**		**19384/385 00**		
190.48 TurboStar	89 / 92	**19384/385 00**		**19384/385 00**		
220 F35 T 6x2 / 6x4	79 / 91	**19384/385 00**		**19384/385 00**		
220.30 Turbo 6x2 / 6x4	82 / 91	**19384/385 00**		**19384/385 00**		
220.32 6x2	89 / 92	**19384/385 00**		**19384/385 00**		
220.36 6x2	87 / 92	**19384/385 00**		**19384/385 00**		
220.38P 6x2x4	82 / 91	**19384/385 00**		**19384/385 00**		
220.38T Turbo	86 / 91	**19384/385 00**		**19384/385 00**		
240 F26	78 / 91	**19384/385 00**		**19384/385 00**		
240 F35	78 / 91	**19384/385 00**		**19384/385 00**		
240.30 / 38 Turbo	/ 91	**19384/385 00**		**19384/385 00**		
240.38P 6x2	82 / 92	**19384/385 00**		**19384/385 00**		
260 F26	78 / 91	**19384/385 00**		**19384/385 00**		
260 F35	78 / 91	**19384/385 00**		**19384/385 00**		
260 PAC26	78 / 91	**19384/385 00**		**19384/385 00**		
260 PC26 6x6	/ 91	**19384/385 00**		**19384/385 00**		
260 PC26 / PT 26 6x4	/ 91	**19384/385 00**		**19384/385 00**		
260 PC35 6x6	/ 91	**19384/385 00**		**19384/385 00**		
260 PC35 / PT35 6x4	79 / 91	**19384/385 00**		**19384/385 00**		
260.25 AN 6x4	/ 91	**19384/385 00**		**19384/385 00**		
260.48	87 / 92	**19384/385 00**		**19384/385 00**		
300.23 8x4	84 /	**19384/385 00**		**19384/385 00**		
300.25 8x4	86 /	**19384/385 00**		**19384/385 00**		
300.30 8x4	87 /	**19384/385 00**		**19384/385 00**		
300.32 8x4 / 300.34 8x4	89 /	**19384/385 00**		**19384/385 00**		
325 E27	91 /	**19384/385 00**		**19384/385 00**		
330 F26	/ 91	**19384/385 00**		**19384/385 00**		
330 F35 P / PT 6x4	79 / 91	**19384/385 00**		**19384/385 00**		
330 PC26 / 35 6x4	/ 91	**19384/385 00**		**19384/385 00**		
330 PT35 6x4 / PC35 6x6	/ 91	**19384/385 00**		**19384/385 00**		
390 E30	91 /	**19384/385 00**		**19384/385 00**		
390 E34	91 /	**19384/385 00**		**19384/385 00**		
50.8 / 50.9 / 50.10 / 55.8 / 55.9 / 55.10	02-82 / 90	**17924/925 91**		**17924/925 91**		
59.12 / K	05-91 /	**17096/099 00**		**17096/099 00**		
60.10 / 65.10	02-82 / 90	**17924/925 91**		**17924/925 91**		
65.12T	87 / 90			**17635/636 01**		
70.10 / 75.10	02-82 / 90	**17924/925 91**		**17924/925 91**		
79.10	83 / 87	**17924/925 91**		**17924/925 91**		
79.10 / 79.12T / 79.13 / 79.14	87 / 90			**17635/636 01**		
79.12 / 79.14	83 / 87			**17635/636 01**		
EUROSTAR LD 240 E 38 6x2	01-93 / 02-02			**19714/715/556 00**		
EUROSTAR LD 240 E 42 FS / LD 240 E 42 OS 6x2	01-93 / 02-02			**19714/715/556 00**		
EUROSTAR LD 240 E 47 P 6x2	01-93 / 02-02			**19714/715/556 00**		
EUROSTAR LD 240 E 52 P 6x2	01-93 / 02-02			**19714/715/556 00**		
EUROSTAR LD 260 E 39 P / LD 260 E 39 FP 6x2	11-99 / 02-02			**19714/715/556 00**		

MODEL / *MODELO*	YEAR - *AÑO*	FRONT *DELANTERA*	SYSTEM *SISTEMA*	REAR *TRASERA*	SYSTEM *SISTEMA*	OBS.
IVECO TRUCKS						
EUROSTAR LD 260 E 40 6x2	09-00 / 02-02			**19714/715/556 00**		
EUROSTAR LD 260 E 43 Y/PS / LD 260 E 43 FP 6x2	01-93 / 02-02			**19714/715/556 00**		
EUROSTAR LD 260 E 48 Y/OS 6x2	01-93 / 02-02			**19714/715/556 00**		
EUROSTAR LD 400 E 38 TXP / LD 440 E 38 TXP 6x2	01-93 / 02-02			**19714/715/556 00**		
EUROSTAR LD 400 E 42 TXP / LD 440 E 42 TXP 6x2	01-93 / 02-02			**19714/715/556 00**		
EUROSTAR LD 440 E 6x2	01-01 / 02-02			**19714/715/556 00**		
EUROSTAR LD 440 E 39 TX / LD 440 E 39 TX/P 6x2	11-99 / 02-02			**19714/715/556 00**		
EUROSTAR LD 440 E 43 TX/P 6x2	11-99 / 02-02			**19714/715/556 00**		
EUROTECH 260 E 39 Y / 260 E 39 Y/P / 260 E 39 Y/FP / 260 E 39 Y/FS 6x2	11-99 /			**19714/715/556 00**		
EUROTECH 260 E 40 Y/P 6x2	01-01 /			**19714/715/556 00**		
EUROTECH 260 E 43 Y / 260 E 43 Y/P+A3166 6x2	11-99 /			**19714/715/556 00**		
EUROTECH 400 E 38 T / 440 E 38 T / 440 E 38 T /P 4x2	01-92 /			**19714/715/556 00**		
EUROTECH 400 E 42 T / 440 E 42 T / 440 E 42 T/P 4x2	01-92 /			**19714/715/556 00**		
EUROTECH 440 E 39 T / 440 E 39 T/P / 440 E 39 T/ FP-CT 4x2	11-99 /			**19714/715/556 00**		
EUROTECH 440 E 40 T 4x2	09-00 /			**19714/715/556 00**		
EUROTECH 440 E 40 TX/P 6x2	01-01 /			**19714/715/556 00**		
EUROTECH 440 E 43 T / 440 E 43 T/P 4x2	11-99 /			**19714/715/556 00**		
EUROTECH MP 240 E 30 OS 6x2	01-97 /			**19714/715/556 00**		
EUROTECH MP 240 E 34 6x2	09-95 / 12-96			**19714/715/556 00**		
EUROTECH MP 240 E 38 6x2	01-92 /			**19714/715/556 00**		
EUROTECH MP 240 E 42 6x2	01-92 /			**19714/715/556 00**		
EUROTECH MP 260 E 38 P 6x4	01-94 /			**19714/715/556 00**		
EUROTECH MP 260 E 42 6x4	01-94 /			**19714/715/556 00**		
EUROTECH MP 400 E 34 T /MP 440 E 34 T 4x2	01-92 /			**19714/715/556 00**		
EUROTECH MP 400 E 38 TXP 6x2	11-93 / 12-96			**19714/715/556 00**		
EUROTECH MP 440 E 39 TX/P 6x2	11-99 /			**19714/715/556 00**		
LD 190 E38 P 4x2	93 / 04-96			**19553/554 00**		
LD 190 E38 P 4x2	05-96 / 08-98			**19716 00**		
LD 190 E42 4x2	93 / 04-96			**19553/554 00**		
LD 190 E42 4x2	05-96 / 08-98			**19716 00**		
LD 190 E47 4x2	95 / 04-96			**19553/554 00**		
LD 190 E47 4x2	05-96 / 08-98			**19716 00**		
LD 190 E52 4x2	95 / 04-96			**19553/554 00**		
LD 190 E52 4x2	05-96 / 08-98			**19716 00**		
LD 240 E38 6x2/2/4	93 / 04-96			**19553/554 00 or 19555/556 00**		
LD 240 E38 6x2/2/4	05-96 / 08-98			**19716 00**		
LD 240 E42 6x2/2/4	93 / 04-96			**19553/554 00 or 19555/556 00**		
LD 240 E42 6x2/2/4	05-96 / 08-98			**19716 00**		
LD 240 E47 P 6x2/2/4	95 / 04-96			**19553/554 00 or 19555/556 00**		
LD 240 E47 P 6x2/2/4	05-96 / 08-98			**19716 00**		
LD 240 E52 P 6x2/2/4	93 / 04-96			**19553/554 00 or 19555/556 00**		
LD 240 E52 P 6x2/2/4	05-96 / 08-98			**19716 00**		
LD 260 E38 P 6x4	95 / 04-96			**19553/554 00**		
LD 260 E38 P 6x4	05-96 / 08-98			**19716 00**		
LD 260 E42 P 6x4	95 / 04-96			**19553/554 00**		
LD 260 E42 P6x4	05-96 / 08-98			**19716 00**		
LD 260 E47 6x4	95 / 04-96			**19553/554 00**		
LD 260 E47 6x4	05-96 / 08-98			**19716 00**		
LD 260 E52 6x4	95 / 04-96			**19553/554 00**		
LD 260 E52 6x4	05-96 / 08-98			**19716 00**		

MODEL / *MODELO*	YEAR - *AÑO*	FRONT *DELANTERA*	SYSTEM *SISTEMA*	REAR *TRASERA*	SYSTEM *SISTEMA*	OBS.
IVECO TRUCKS						
LD 400 E38 TXP 6x2/4	94 / 04-96			19553/554 00 or 19555/556 00		
LD 400 E38 TXP 6x2/4	05-96 / 08-98			19716 00		
LD 400 E42 TXP 6x2/4	94 / 04-96			19553/554 00 or 19555/556 00		
LD 400 E42 TXP 6x2/4	05-96 / 08-98			**19716 00**		
LD 440 E38 T 4x2	93 / 04-96			**19553/554 00**		
LD 440 E38 T 4x2	05-96 / 08-98			**19716 00**		
LD 440 E38 TX 6x2/4	94 / 04-96			19553/554 00 or 19555/556 00		
LD 440 E38 TX 6x2/4	05-96 / 08-98			**19716 00**		
LD 440 E38 TZ 6x4	95 / 04-96			**19553/554 00**		
LD 440 E38 TZ 6x4	05-96 / 08-98			**19716 00**		
LD 440 E42 T 4x2	93 / 04-96			**19553/554 00**		
LD 440 E42 T 4x2	05-96 / 08-98			**19716 00**		
LD 440 E42 TX 6x2/4	94 / 04-96			19553/554 00 or 19555/556 00		
LD 440 E42 TX 6x2/4	05-96 / 08-98			**19716 00**		
LD 440 E42 TZ 6x4	93 / 04-96			**19553/554 00**		
LD 440 E42 TZ 6x4	05-96 / 08-98			**19716 00**		
LD 440 E47 T 4x2	95 / 04-96			**19553/554 00**		
LD 440 E47 T 4x2	05-96 / 08-98			**19716 00**		
LD 440 E52 T 4x2	95 / 04-96			**19553/554 00**		
LD 440 E52 T 4x2	05-96 / 08-98			**19716 00**		
LD 440 R52 TZ 6x4	93 / 04-96			**19553/554 00**		
LD 440 R52 TZ 6x4	05-96 / 08-98			**19716 00**		
MP 180 E52	92 / 04-96			**19553/554 00**		
MP 180 E52	05-96 / 08-98			**19716 00**		
MP 190 E 30 H	01-93 / 11-04			**19109/110 00**		
MP 190 E 30 W	01-93 / 11-04			**19109/110 00**		
MP 190 E 31 H Cursor	09-99 / 11-04			**19109/110 00**		
MP 190 E 31 W Cursor	09-99 / 11-04			**19109/110 00**		
MP 190 E 34 H	01-93 / 11-04			**19109/110 00**		
MP 190 E 34 W	01-93 / 11-04			**19109/110 00**		
MP 190 E 35 H Cursor	09-99 / 11-04			**19109/110 00**		
MP 190 E 35 W Cursor	09-99 / 11-04			**19109/110 00**		
MP 190 E 37 H	01-93 / 11-04			**19109/110 00**		
MP 190 E 37 W	01-93 / 11-04			**19109/110 00**		
MP 190 E 38 W Cursor	01-01 / 11-04			**19109/110 00**		
MP 190 E 42 H	01-93 / 11-04			**19109/110 00**		
MP 190 E 42 W	01-93 / 11-04			**19109/110 00**		
MP 190 E 44 W Cursor	09-00 / 11-04			**19109/110 00**		
MP 190 E30 4x2 / 4x4	05-96 /	**19716 00**		**19716 00**		
MP 190 E30 4x2 / 4x4	93 / 04-96	**19553/554 00**		**19553/554 00**		
MP 190 E34 4x2	93 / 04-96			**19553/554 00**		
MP 190 E34 4x2	05-96 / 08-98			**19716 00**		
MP 190 E34 4x2 / 4x4	93 / 04-96	**19553/554 00**		**19553/554 00**		
MP 190 E34 4x2 / 4x4	05-96 /	**19716 00**		**19716 00**		
MP 190 E37 4x2 / 4x4	93 / 04-96	**19553/554 00**		**19553/554 00**		
MP 190 E37 4x2 / 4x4	05-96 /	**19716 00**		**19716 00**		
MP 190 E38 4x2	93 / 04-96			**19553/554 00**		
MP 190 E38 4x2	05-96 / 08-98			**19716 00**		
MP 190 E42 4x2	93 / 04-96			**19553/554 00**		
MP 190 E42 4x2	05-96 / 08-98			**19716 00**		
MP 190 E42 4x2 / 4x4	95 / 04-96	**19553/554 00**		**19553/554 00**		
MP 190 E42 4x2 / 4x4	05-96 /	**19716 00**		**19716 00**		

MODEL / *MODELO*	YEAR - *AÑO*	FRONT *DELANTERA*	SYSTEM *SISTEMA*	REAR *TRASERA*	SYSTEM *SISTEMA*	OBS.
IVECO TRUCKS						
MP 190 E52	92 / 04-96			**19553/554 00**		
MP 190 E52	05-96 / 08-98			**19716 00**		
MP 240 E30 6x2	97 / 08-98			**19716 00**		
MP 240 E34 6x2	09-95 / 96			**19553/554 00 or 19555/556 00**		
MP 240 E34 6x2	05-96 / 08-98			**19716 00**		
MP 240 E38 6x2	92 / 04-96			**19553/554 00 or 19555/556 00**		
MP 240 E38 6x2	05-96 / 08-98			**19716 00**		
MP 240 E42 6x2	92 / 04-96			**19553/554 00 or 19555/556 00**		
MP 240 E42 6x2	05-96 / 08-98			**19716 00**		
MP 240 E52 6x2	92 / 04-96			**19553/554 00 19555/556 00**		
MP 240 E52 6x2	05-96 / 08-98			**19716 00**		
MP 260 E 30 H	01-93 / 11-04			**19109/110 00**		
MP 260 E 31 H Cursor	09-99 / 11-04			**19109/110 00**		
MP 260 E 31 HB Cursor	11-99 / 11-04			**19109/110 00**		
MP 260 E 34 H	01-93 / 11-04			**19109/110 00**		
MP 260 E 34 W	01-93 / 11-04			**19109/110 00**		
MP 260 E 35 H Cursor	01-00 / 11-04			**19109/110 00**		
MP 260 E 35 W Cursor	09-99 / 11-04			**19109/110 00**		
MP 260 E 37 H	01-93 / 11-04			**19109/110 00**		
MP 260 E 37 W	01-93 / 11-04			**19109/110 00**		
MP 260 E 38 H Cursor	01-01 / 11-04			**19109/110 00**		
MP 260 E 38 W Cursor	01-01 / 11-04			**19109/110 00**		
MP 260 E 42 H	01-93 / 11-04			**19109/110 00**		
MP 260 E 42 W	01-93 / 11-04			**19109/110 00**		
MP 260 E 44 H Cursor	01-00 / 11-04			**19109/110 00**		
MP 260 E 44 W Cursor	01-01 / 11-04			**19109/110 00**		
MP 260 E30 6x4	93 / 04-96	**19553/554 00**		**19553/554 00**		
MP 260 E30 6x4	05-96 /	**19716 00**		**19716 00**		
MP 260 E34 6x4 / 6x6	93 / 04-96	**19553/554 00**		**19553/554 00**		
MP 260 E34 6x4 / 6x6	05-96 /	**19716 00**		**19716 00**		
MP 260 E37 6x4 / 6x6	93 / 04-96	**19553/554 00**		**19553/554 00**		
MP 260 E37 6x4 / 6x6	05-96 /	**19716 00**		**19716 00**		
MP 260 E38 6x4	92 / 04-96			**19553/554 00 or 19555/556 00**		
MP 260 E38 6x4	05-96 / 08-98			**19716 00**		
MP 260 E42 6x4	92 / 04-96			**19553/554 00 or 19555/556 00**		
MP 260 E42 6x4	05-96 / 08-98			**19716 00**		
MP 260 E42 6x4 / 6x6	93 / 04-96	**19553/554 00**		**19553/554 00**		
MP 260 E42 6x4 / 6x6	05-96 /	**19716 00**		**19716 00**		
MP 260 E52	92 / 04-96			**19553/554 00 or 19555/556 00**		
MP 260 E52	05-96 / 08-98			**19716 00**		
MP 340 E 34 H	01-93 / 11-04			**19109/110 00**		
MP 340 E 35 H Cursor	09-99 / 11-04			**19109/110 00**		
MP 340 E 35 HB Cursor	01-01 / 11-04			**19109/110 00**		
MP 340 E 37 H	01-93 / 11-04			**19109/110 00**		
MP 340 E 38 H Cursor	01-01 / 11-04			**19109/110 00**		
MP 340 E 38 HB Cursor	01-01 / 11-04			**19109/110 00**		
MP 340 E 42 H	01-93 / 11-04			**19109/110 00**		
MP 340 E 44 H Cursor	01-01 / 11-04			**19109/110 00**		
MP 340 E 44 HB Cursor	01-01 / 11-04			**19109/110 00**		
MP 340 E34 8x4/4	94 / 04-96	**19553/554 00**		**19553/554 00**		

MODEL / *MODELO*	YEAR - *AÑO*	FRONT *DELANTERA*	SYSTEM *SISTEMA*	REAR *TRASERA*	SYSTEM *SISTEMA*	OBS.
IVECO TRUCKS						
MP 340 E34 8x4/4	05-96 /	**19716 00**		**19716 00**		
MP 340 E37 8x4/4	94 / 04-96	**19553/554 00**		**19553/554 00**		
MP 340 E37 8x4/4	05-96 /	**19716 00**		**19716 00**		
MP 340 E42 8x4/4	95 / 04-96	**19553/554 00**		**19553/554 00**		
MP 340 E42 8x4/4	05-96 /	**19716 00**		**19716 00**		
MP 380 E 34 H	01-93 / 11-04			**19109/110 00**		
MP 380 E 37 H	01-93 / 11-04			**19109/110 00**		
MP 380 E 37 W	01-93 / 11-04			**19109/110 00**		
MP 380 E 38 H Cursor	01-01 / 11-04			**19109/110 00**		
MP 380 E 38 W Cursor	01-01 / 11-04			**19109/110 00**		
MP 380 E 42 H	01-93 / 11-04			**19109/110 00**		
MP 380 E 42 W	01-93 / 11-04			**19109/110 00**		
MP 380 E 44 H Cursor	01-01 / 11-04			**19109/110 00**		
MP 380 E 44 W Cursor	01-01 / 11-04			**19109/110 00**		
MP 380 E 44 W	01-01 / 11-04			**19109/110 00**		
MP 380 E34 6x4	93 / 04-96	**19553/554 00**		**19553/554 00**		
MP 380 E34 6x4	05-96 /	**19716 00**		**19716 00**		
MP 380 E37 6x4 / 6x6	93 / 04-96	**19553/554 00**		**19553/554 00**		
MP 380 E37 6x4 / 6x6	05-96 /	**19716 00**		**19716 00**		
MP 380 E42 6x4 / 6x6	93 / 04-96	**19553/554 00**		**19553/554 00**		
MP 380 E42 6x4 / 6x6	05-96 /	**19716 00**		**19716 00**		
MP 400 E 34 HT	01-93 / 11-04			**19109/110 00**		
MP 400 E 37 HT	01-93 / 11-04			**19109/110 00**		
MP 400 E 37 WT	01-93 / 11-04			**19109/110 00**		
MP 400 E 42 HT	01-93 / 11-04			**19109/110 00**		
MP 400 E 42 WT	01-93 / 11-04			**19109/110 00**		
MP 400 E34 4x2	93 / 04-96	**19553/554 00**		**19553/554 00**		
MP 400 E34 4x2	05-96 /	**19716 00**		**19716 00**		
MP 400 E34 4x2 / 6x2 / 6x4	92 / 04-96			**19553/554 00**		
MP 400 E34 4x2 / 6x2 / 6x4	05-96 / 08-98			**19716 00**		
MP 400 E37 4x2 / 4x4	93 / 04-96	**19553/554 00**		**19553/554 00**		
MP 400 E37 4x2 / 4x4	05-96 /	**19716 00**		**19716 00**		
MP 400 E38 4x2 / 6x2 / 6x4	92 / 04-96			**19553/554 00**		
MP 400 E38 4x2 / 6x2 / 6x4	05-96 / 08-98			**19716 00**		
MP 400 E38 (6x2 Tractors)	11-93 / 04-96			**19553/554 00 or 19555/556 00**		
MP 400 E38 (6x2 Tractors)	05-96 / 12-96			**19716 00**		
MP 400 E42 4x2	92 / 04-96			**19553/554 00**		
MP 400 E42 4x2	05-96 / 08-98			**19716 00**		
MP 400 E42 4x2 / 4x4	95 / 04-96	**19553/554 00**		**19553/554 00**		
MP 400 E42 4x2 / 4x4	05-96 /	**19716 00**		**19716 00**		
MP 400 E42 (6x2 Tractors)	09-92 / 04-96			**19553/554 00 or 19555/556 00**		
MP 400 E42 (6x2 Tractors)	05-96 / 08-98			**19716 00**		
MP 400 E52	92 / 04-96			**19553/554 00**		
MP 400 E52	05-96 / 08-98			**19716 00**		
MP 410 E 37 H	01-93 / 11-04			**19109/110 00**		
MP 410 E 38 H Cursor	01-01 / 11-04			**19109/110 00**		
MP 410 E 42 H	01-93 / 11-04			**19109/110 00**		
MP 410 E 42 W	01-93 / 11-04			**19109/110 00**		
MP 410 E 44 H Cursor	01-01 / 11-04			**19109/110 00**		
MP 410 E37 8x4/4	94 / 04-96	**19553/554 00**		**19553/554 00**		
MP 410 E37 8x4/4	05-96 /	**19716 00**		**19716 00**		
MP 410 E42 8x4/4 / 8x8/4	94 / 04-96	**19553/554 00**		**19553/554 00**		
MP 410 E42 8x4/4 / 8x8/4	05-96 /	**19716 00**		**19716 00**		

MODEL / *MODELO*	YEAR - *AÑO*	FRONT *DELANTERA*	SYSTEM *SISTEMA*	REAR *TRASERA*	SYSTEM *SISTEMA*	OBS.
IVECO TRUCKS						
MP 440 E 34 HT	01-93 / 11-04			**19109/110 00**		
MP 440 E 37 HT	01-93 / 11-04			**19109/110 00**		
MP 440 E 42 HT	01-93 / 11-04			**19109/110 00**		
MP 440 E34	92 / 04-96			**19553/554 00**		
MP 440 E34	05-96 / 08-98			**19716 00**		
MP 440 E34	92 / 04-96			**19553/554 00 or 19555/556 00**		
MP 440 E34	05-96 / 08-98			**19716 00**		
MP 440 E34 6x4	94 / 04-96	**19553/554 00**		**19553/554 00**		
MP 440 E34 6x4	05-96 /	**19716 00**		**19716 00**		
MP 440 E37 6x4	93 / 04-96	**19553/554 00**		**19553/554 00**		
MP 440 E37 6x4	05-96 /	**19716 00**		**19716 00**		
MP 440 E38	92 / 04-96			**19553/554 00**		
MP 440 E38	05-96 / 08-98			**19716 00**		
MP 440 E38 (6x2 Tractors)	93 / 04-96			**19553/554 00 or 19555/556 00**		
MP 440 E38 (6x2 Tractors)	05-96 / 08-98			**19716 00**		
MP 440 E42	92 / 04-96			**19553/554 00**		
MP 440 E42	05-96 / 08-98			**19716 00**		
MP 440 E42 (6x2 Tractors)	93 / 04-96			**19553/554 00 or 19555/556 00**		
MP 440 E42 (6x2 Tractors)	05-96 / 08-98			**19716 00**		
MP 440 E42 6x4	97 /	**19716 00**		**19716 00**		
MP 440 E52	92 / 04-96			**19553/554 00 or 19555/556 00**		
MP 440 E52	05-96 / 08-98			**19716 00**		
MP 720 E 37 HT	01-93 / 11-04			**19109/110 00**		
MP 720 E 37 WT	01-93 / 11-04			**19109/110 00**		
MP 720 E 42 HT	01-93 / 11-04			**19109/110 00**		
MP 720 E 42 WT	01-93 / 11-04			**19109/110 00**		
MP 720 E 47 HT	01-93 / 11-04			**19109/110 00**		
MP 720 E37 6x4 / 6x6	94 / 04-96	**19553/554 00**		**19553/554 00**		
MP 720 E37 6x4 / 6x6	05-96 /	**19716 00**		**19716 00**		
MP 720 E42 6x4 / 6x6	97 /	**19716 00**		**19716 00**		
MP 720 E47 6x4	09-98 /	**19716 00**		**19716 00**		
MT 180 E24 4x2	92 / 96			**19384/385 00**		Chass. 4-196435 / ...
MT 180 E27 4x2	92 / 96			**19384/385 00**		Chass. 4-196435 / ...
MT 180 E30 4x2	92 / 96			**19384/385 00**		Chass. 4-196435 / ...
MT 180 E34 4x2	92 / 93			**19384/385 00**		Chass. 4-196435 / ...
MT 190 E24 4x2	97 / 08-98			**19384/385 00**		Chass. 4-196435 / ...
MT 190 E27 4x2	97 / 08-98			**19384/385 00**		Chass. 4-196435 / ...
MT 190 E30 4x2	97 / 08-98			**19384/385 00**		Chass. 4-196435 / ...
MT 325 E27 4x2	09-92 /			**19384/385 00**		
MT 400 E30 4x2	92 / 08-98			**19384/385 00**		
MT 400 E34 4x2	09-92 /			**19384/385 00**		

IVECO BUSES						
MAGIRUS Touring bus M 2000 (R119 I)	78 /	**19384/385 00**		**19384/385 00**		
MAGIRUS Touring bus M 2000 (R119 II)	04-80 /	**19384/385 00**		**19384/385 00**		

JAC MOTORS						
J3 1.4 16V	11 /	**PD/382**	Akebono			
J3 TURIN 1.4 16V	11 /	**PD/382**	Akebono			
J5 1.5 16V	11 /			**PD/666**	Mando	
J5 1.5 16V	11 /	**PD/1371**		**PD/1372**		

MODEL / *MODELO*	YEAR - *AÑO*	FRONT *DELANTERA*	SYSTEM *SISTEMA*	REAR *TRASERA*	SYSTEM *SISTEMA*	OBS.
JAC MOTORS						
J6 2.0 16V	11 /			**PD/666**	Mando	
JAGUAR						
S-TYPE	04 /	**PD/1008**		**PD/76**		
S-TYPE	06 /			**PD/76**		
S-TYPE 3.0L / 4.0L	00 / 02	**PD/1008**		**PD/76**		
S-TYPE 3.0L / 4.2L	03 /	**PD/1008**				
S-TYPE R	04 /			**PD/76**		
XJ8	99 / 03	**PD/1003**		**PD/42**		
XJ8 4.0L	98 /			**PD/42**		
XJ8 4.2L	04 /	**PD/1008**		**PD/76**		
XJR 4.0L	00 / 03			**PD/42**		
XK8	98 / 04			**PD/42**		
X-TYPE	02 / 05	**PD/586**		**PD/599**		
X-TYPE	05 / 06	**PD/586**				
X-TYPE 2.5L / 3.0L	02 / 07	**PD/586**		**PD/599**		
JEEP						
CHEROKEE	92 / 96	**PD/418**	K. Hayes			Freio de mão **FD/99-CP**
CHEROKEE	94 / 96	**PD/708**	K. Hayes			Freio de mão **FD/99-CP**
CHEROKEE	97 / 98			**PD/556**		
CHEROKEE 4 X 4	90 / 93	**PD/418**	K. Hayes			
CHEROKEE 4 X 4	90 / 93	**PD/708**	K. Hayes			
CHEROKEE COUNTRY 4X4	92 / 93	**PD/418**	K. Hayes			
CHEROKEE SPORT 2.5 / 4.0	97 / 01	**PD/418**	K. Hayes			
CHEROKEE SPORT 2.5 L / 4.0 L / TD	97 /	**PD/418**	K. Hayes			
CHEROKEE SPORT 4.0L	94 /	**PD/418**				
CHEROKEE II 3.7 V6	08 /			**PD/082**	K. Hayes	
COMANCHE 4X4	90 / 92	**PD/418**	K. Hayes			
COMMANDER 4.7L / 5.7L	06 / 09	**PD/807**		**PD/802**		
COMPASS	07 / 09	**PD/631**		**PD/723**		
COMPASS	11 /	**PD/1353**	Akebono			
DURANGO	98 /	**PD/485**				
GRAND CHEROKEE	92 / 96	**PD/418**	K. Hayes			
GRAND CHEROKEE	92 / 98	**PD/708**	K. Hayes			
GRAND CHEROKEE	94 / 98			**PD/556**		
GRAND CHEROKEE	99 / 02	**PD/620**	Teves	**PD/573**		
GRAND CHEROKEE	02 / 04			**PD/573**		
GRAND CHEROKEE	94 /	**PD/418**				
GRAND CHEROKEE	99 / 04	**PD/755**		**PD/573**	Akebono	
GRAND CHEROKEE	11 /	**PD/1354**		**PD/1357**		
GRAND CHEROKEE LIMITED 3.0 TB	05 /			**PD/802**	K. Hayes	
GRAND CHEROKEE 4.0L	99 / 02	**PD/620**		**PD/573**		
GRAND CHEROKEE 4.7L	06 / 09	**PD/807**		**PD/802**		
GRAND CHEROKEE 5.2L	93 /	**PD/418**				
GRAND CHEROKEE 5.2L	95 / 98	**PD/418**		**PD/556**		
GRAND CHEROKEE LIMITED 5.7	05 /			**PD/802**	K. Hayes	
GRAND CHEROKEE Ladero 3.1 / 4.0 / 4.7	00 /	**PD/418**	K. Hayes			
GRAND CHEROKEE LAREDO	92 / 96	**PD/418**	K. Hayes			
GRAND CHEROKEE USA	93 / 96	**PD/418**				
GRAND WAGONEER	90 / 91	**PD/324**				
LIBERTY	02 /	**PD/580**				
LIBERTY	04 /			**PD/588**		
LIBERTY	03 / 07	**PD/580**		**PD/588**		

MODEL / *MODELO*	YEAR - *AÑO*	FRONT *DELANTERA*	SYSTEM *SISTEMA*	REAR *TRASERA*	SYSTEM *SISTEMA*	OBS.
JEEP						
LIBERTY	08 / 09	**PD/1026**		**PD/1082**		
RENEGADE (BU) 2.0 CRD 4x4	14/	**PD/1512**		**PD/1496**		
LIBERTY 3.7L	02 /	**PD/580**				
PATRIOT 2.4L	07 / 09	**PD/631**		**PD/723**		
WAGONNER	77 / 83	**PD/324**				
WILLYS CJ	78 / 83	**PD/324**				
WRANGLER	90 / 97	**PD/708**	K. Hayes			
WRANGLER	97 / 98			**PD/556**		
WRANGLER	02 / 06			**PD/775**		
WRANGLER	06			**PD/588**		
WRANGLER	03 / 06	**PD/418**		**PD/775**		
WRANGLER	07 / 09	**PD/1026**		**PD/1082**		
WRANGLER 2.8 CDR	07 /			**PD/1082**	K. Hayes	
WRANGLER 3.8l V6	07 /			**PD/1082**	K. Hayes	
WRANGLER 3.8l V6 4WD	07 /			**PD/1082**	K. Hayes	
WRANGLER 2.5L / 4.0L	93 / 02	**PD/418**	K. Hayes			
WRANGLER SPORT 4.0	90 /	**PD/418**	K. Hayes			
KAROSA						
AGORA	97 /	**PD/125**	Meritor			
B 731 / C 734 / C 735 / LC 736	81 / 86			**19896 00**		
KÄSSBOHRER						
300 x 200,0 mm				**19515/516 00**		
300 x 200,0 mm				**19574 00**		S-Cam Brakes
400 x 150,0 mm				**19168/169 00**		
400 x 200,0 mm				**19166/167 00**		S-Cam Brakes
420 x 180,0 mm				**19032 00**		BPW Axle
420 x 200,0 mm				**19094 00**		BPW Axle
CONFORTCLASS S 315 GT / GT-HS				**19849/850 00**		
CONFORTCLASS S 317 GT-HD / S 319 GT-HD				**19849/850 00**		
MULTICLASS S 313 UL	91 /			**19847/848 00**		
MULTICLASS S 315 UL / H				**19847/848 00**		
MULTICLASS SG 321 UL	91 /			**19847/848 00**		19849/850 00 2nd rear axle
SETRA S 130 ES	82 / 86					19847/848 00 2nd rear axle
SETRA S 140	01-89 /	**PD/175**	Knorr			
SETRA S 140	83 / 88	**19849/850 00**		**19847/848 00**		
SETRA S 140	89 /			**19847/848 00**		
SETRA S 140	01-89 /	**PD/176**	Knorr			
SETRA S 210 / HD / HDV	83 / 88	**19849/850 00**				
SETRA S 210 / HD / HDV / S 211	83 / 88	**PD/175**	Knorr			
SETRA S 210 / HD / HDV / S 211	83 / 88	**PD/176**	Knorr			
SETRA S 211 / S 212 HUE / S 213 / S 214 / S 215 SL / UL	83 / 88	**19849/850 00**		**19847/848 00**		
SETRA S 211 / S 212 HUE / S 213 / S 214 / S 215 SL / UL	89 /			**19847/848 00**		
SETRA S 212 HUE / 213 / 214 / 215 UL / SL	83 / 88	**PD/175**	Knorr			
SETRA S 212 HUE / 213 / 214 / 215 UL / SL	83 / 88	**PD/176**	Knorr			
SETRA S 213 / 214 / 215 / 215 HDH / 216 HDS / HDSI	89 /	**PD/175**	Knorr			
SETRA S 213 / 214 / 215 / 215 HDH / 216 HDS / HDSI	89 /	**PD/176**	Knorr			
SETRA S 215 HDH / S 216 HDS	83 /			**19847/848 00**		19849/850 00 2nd rear axle
SETRA S 215 NR	91 /			**19847/848 00**		
SETRA S 228 DT	84 /			**19847/848 00**		19849/850 00 2nd rear axle
SETRA S 228 DT	88 /	**PD/175**	Knorr			
SETRA S 228 DT	88 /	**PD/176**	Knorr			

MODEL / *MODELO*	YEAR - *AÑO*	FRONT *DELANTERA*	SYSTEM *SISTEMA*	REAR *TRASERA*	SYSTEM *SISTEMA*	OBS.
KÄSSBOHRER						
SETRA S 300 N	89 /	**19849/850 00**		**19847/848 00**		
SETRA S 300 NC (City)	89 /	**PD/125**	Meritor			
SETRA S 300 NC (City)	89 /	**PD/125 (30mm)**	Meritor			
SETRA S 309 HD / 312 HD / 315 HD / HDH	91 /	**PD/125**	Meritor			
SETRA S 309 HD / 312 HD / 315 HD / HDH	91 /	**PD/125 (30mm)**	Meritor			
SETRA S 309 HD / S 312 HD / S 315 HD / HDH	91 /			**19847/848 00**		
SETRA S 313 UL	91 /	**PD/125**	Meritor			
SETRA S 313 UL	91 /	**PD/125 (30mm)**	Meritor			
SETRA S 313 UL	91 /			**19847/848 00**		
SETRA S 315 NF / 319 ÜL	91 /	**PD/125**	Meritor	**PD/116**	Knorr	
SETRA S 315 NF / 319 ÜL	91 /	**PD/125 (30mm)**	Meritor	**PD/116**	Knorr	
SETRA S 328 DT	94 /	**PD/116**	Knorr			
SETRA S 415 HD / S 415 HDH / S 417 HDH	01 /	**PD/116**	Knorr	**PD/116**	Knorr	
SETRA SG 219 SL / SG 221 UL	84 / 87	**19849/850 00**		**19847/848 00**		
TOPCLASS S 309 HD / S 312 HD / S 315 HD / HDH / S 316 HDS	91 /			**19847/848 00**		
TOPCLASS S 315 HDH-3 / S 317 HDH-3				**19847/848 00**		19849/850 00 2nd rear axle
TOPCLASS S 328 DT						19849/850 00 2nd rear axle
KENWORTH						
T SERIES	08	**PD/144**		**PD/144**		
KENWORTH CLASE 7						
T 300	98 / 07	**4719**		**4709**		eixo dianteiro EATON eixo traseiro EATON
T 300	04 / 07	**4719**		**4709**		eixo dianteiro DANA SPICER eixo traseiro DANA SPICER
KENWORTH CLASE 8						
T 370 33K (4x2)	09	**4720** **4719**		**4707** **4709**		eixo dianteiro DANA / DIRONA eixo traseiro DANA SPICER / MERITOR
T 370 35K (4x2)	09	**4720** **4719**		**4707** **4709**		eixo dianteiro DANA / DIRONA eixo traseiro DANA / MERITOR
T 370 52K (6x4)	09	**4720** **4719**		**4707** **4709**		eixo dianteiro DANA / DIRONA eixo traseiro DANA / MERITOR
T 370 53.2K (6x2)	09	**4720** **4719**		**4707** **4709**		eixo dianteiro DANA / DIRONA eixo traseiro DANA SPICER
T 370 60.6K (6x4)	09	**4720** **4719**		**4707** **4709**		eixo dianteiro DANA eixo traseiro MERITOR
T 370 DORMITORIO	09	**4720** **4719**		**4707** **4709**		eixo dianteiro DANA eixo traseiro DANA / MERITOR
T 370 QUINTA RUEDA	09	**4720** **4719**		**4707** **4709**		eixo dianteiro DANA eixo traseiro DANA / MERITOR
KENWORTH CONSTRUCCIÓN						
T 300 REVOLVEDORA	06 / 07	**4720** **4719**		**4707** **4709**		eixo dianteiro ROCKWELL eixo traseiro ROCKWELL
T 370 CONSTRUCCIÓN	09	**4720** **4719**		**4707** **4709**		eixo dianteiro DANA / DIRONA eixo traseiro DANA / MERITOR
T 450 W	98	**4715**		**4707** **4709**		eixo dianteiro ROCKWELL eixo traseiro ROCKWELL
T 800 CONSTRUCCIÓN	09	**4720** **4719**		**4707** **4709**		eixo dianteiro DANA / MERITOR eixo traseiro DANA /
T 800 REVOLVEDORA / BOMBA	06 / 07	**4720** **4719**		**4707** **4709**		eixo dianteiro DIRONA eixo traseiro MERITOR
T 800 SH (6x4) (8x4)	98 / 00	**4720** **4719**		**4707** **4709**		eixo dianteiro DIRONA / DANA eixo traseiro MERITOR / DANA
T 800 SHW (SHORT HOOD WIDE)	99 / 00	**4720** **4719**		**4707** **4709**		eixo dianteiro DANA / MERITOR eixo traseiro DANA / MERITOR

MODEL / *MODELO*	YEAR - *AÑO*	FRONT *DELANTERA*	SYSTEM *SISTEMA*	REAR *TRASERA*	SYSTEM *SISTEMA*	OBS.
KENWORTH TRACTOCAMIONES						
T 600	98 / 06	**4720** **4719**		**4707** **4709**		eixo dianteiro DIRONA eixo traseiro MERITOR
T 600B AEROCAB	99 / 00	**4720** **4719**		**4707** **4709**		eixo dianteiro DIRONA eixo traseiro EATON / DIRONA
T 600B MODULAR	99 / 00	**4720** **4719**		**4707** **4709**		eixo dianteiro DIRONA eixo traseiro EATON / DIRONA
T 604	01 / 02	**4720** **4719**		**4707** **4709**		eixo dianteiro EATON eixo traseiro EATON
T 660	09	**4720** **4719**		**4707** **4709**		eixo dianteiro DANA / MERITOR eixo traseiro DANA / MERITOR
T 800	01 / 08	**4720** **4719**		**4707** **4709**		eixo dianteiro DIRONA / DANA SPICER eixo traseiro MERITOR / DANA SPICER
T 800	09	**4720** **4719**		**4707** **4709**		eixo dianteiro DIRONA / MERITOR eixo traseiro DANA / MERITOR
T 800 MODULAR	99 / 00	**4720** **4719**		**4707** **4709**		eixo dianteiro DIRONA eixo traseiro MERITOR
T 800 SHAEROCAB	99 / 00	**4720** **4719**		**4707** **4709**		eixo dianteiro DIRONA eixo traseiro MERITOR
T 800B	98	**4720** **4719**		**4707** **4709**		eixo dianteiro DIRONA eixo traseiro MERITOR
T 800B AEROCAB	99 / 00	**4720** **4719**		**4707** **4709**		eixo dianteiro DIRONA eixo traseiro MERITOR
T 2000	99 / 08	**4720** **4719**		**4707** **4709**		eixo dianteiro DIRONA eixo traseiro MERITOR
W 900	01 / 08	**4720** **4719**		**4707** **4709**		eixo dianteiro DIRONA / DANA eixo traseiro MERITOR / DANA
W 900L	09	**4720** **4719**		**4707** **4709**		eixo dianteiro DANA / MERITOR eixo traseiro DANA / MERITOR
KENWORTH MEXICANA / CAMIONES						
K 130	92	**1308**		**4515-E** **4515-F**		
T 300, T 400B	92	**1308**		**4515-E** **4515-F**		
T 450	90 / 95	**1308**		**4515-F**		
KENWORTH MEXICANA / TRACTOCAMIONES						
523, 853 LFC	70 / 86			**4515-E** **4515-F**		
C-500, RENOVA	88 / 91			**4515-E** **4515-F**		
K 500	88			**4515-F**		
K 100, T 400B, T 450B, T 600, T600B	91 / 95	**1308**		**4515-E** **4515-F**		
T 450 4x2	93			**4515-F**		
T 450 6x2	93			**4515-F**		
T 800B	91			**4515-F**		
T 800	88 / 95			**4515-E** **4515-F**		
TK 130	93			**4515-F**		
TK 300	93			**4515-F**		
K 524, L 700, W 924	80 / 89			**4515-E** **4515-F**		

KIA MOTORS						
AMANTI	04 / 06	**PD/667**	Akebono	**PD/725**	Akebono	
BESTA 2.2	93 /	**PD/333**	Akebono	**KI/133-CP**		
BESTA 2.7 ST / EST / EST Full	93 /	**PD/333**	Akebono	**KI/133-CP**		
BESTA BONGO	97 / 99	**PD/64**	Akebono	**KI/143-CP**		
BESTA BONGO	99 /	**PD/69** **PD/331**	Akebono	**KI/143-CP**		
BESTA EST 2.7	93 / 98	**PD/333**	Akebono	**KI/133-CP**		
BESTA FURGÃO	97 / 99	**PD/64**	Akebono	**KI/143-CP**		

MODEL / *MODELO*	YEAR - *AÑO*	FRONT *DELANTERA*	SYSTEM *SISTEMA*	REAR *TRASERA*	SYSTEM *SISTEMA*	OBS.
KIA MOTORS						
BESTA FURGÃO	99 /	**PD/69**	Akebono	**KI/143-CP**		
BESTA FURGÃO 2.2	93 / 98	**PD/333**	Akebono	**KI/133-CP**		
BESTA GS	97 / 99	**PD/64**	Akebono	**KI/143-CP**		
BESTA GS	99 /	**PD/69**	Akebono	**KI/143-CP**		
BESTA GS 3.0	99 / 05	**PD/69**	Akebono	**KI/143-CP**		
BESTA GS 3.0	05 /			**KI/200-CP**		
BESTA STD 2.2	93 / 98	**PD/333**	Akebono	**KI/133-CP**		
BONGO K-788 2.5L 16V	15 /	**PD/69**		**HY/338-CP**		
BONGO K-2400 2.4	93 / 97	**PD/333**	Akebono	**KI/133-CP**		
BONGO K-2500 2.5 T	08 /	**PD/331**	Akebono			
BONGO K-2700	97 /	**PD/333** **PD/331**	Akebono	**KI/133-CP**		
CADENZA 3.5 V6	11 /	**PD/1296**				
CARENS	06 /			**PD/725**	Akebono	
CARENS 1.6 EX / LX / 1.8 EX / LX	02 /	**PD/1092**	Mando			
CARENS 2.0	07 /	**PD/1296**	Mando			
CARENS 2.0 CRDi	05 /	**PD/1092**	Mando			
CARNIVAL 2.5 V6	99 / 05-00	**PD/418**	K. Hayes			
CARNIVAL 2.5 V6	06-00 /	**PD/69**	Akebono			
CARNIVAL 2.7 V6	06-06 /	**PD/1287**	Mando	**PD/1299**	Mando	
CARNIVAL 2.9 TD	99 / 05-00	**PD/418**	K. Hayes			
CARNIVAL 2.9 TD	06-00 /	**PD/69**	Akebono			
CARNIVAL 3.8 V6	07 /	**PD/1359**				
CERATO 1.6	/ 08	**PD/752**	Mando	**PD/666**	Mando	
CERATO 1.6	09 /	**PD/1092**	Mando	**PD/1093**	Mando	
CERATO 1.6 L 16V	13 /	**PD/1348**		**PD/1368**		
CERATO 2.0	08 /	**PD/665**		**PD/666**	Mando	
CERATO (TODOS)	06 /			**KI/362-CPA**	Mando	Freio traseiro Ø 203x36mm
MAGENTIS	07 /	**PD/635**	Akebono	**PD/725**	Akebono	
MOHAVE 3.8 V6 4x4	10 /	**PD/1287**	Mando			
MOHAVE EX 3.0 V6	10 /	**PD/1287**	Mando			
MOHAVE EX 4.6 V8 4x4	10 /	**PD/1287**	Mando			
MOHAVE 3.8 V6 24V 4x4	10 /			**PD/1366**	Akebono	
MOHAVE 4.6 V8 32V 4x4	10 /			**PD/1366**	Akebono	
MOHAVE EX 3.0 V6 24V	10 /			**PD/1366**	Akebono	
OPTIMA 2.4 16V	11 /	**PD/1351**		**PD/1356**		
OPIRUS	03 /	**PD/667**	Akebono	**PD/725**	Akebono	
OPTIMA 2.4 16V	11 /	**PD/1351**		**PD/1356**		
OPTIMA	03 / 06	**PD/635**	Akebono	**PD/725**	Akebono	
OPTIMA	07 /			**PD/725**	Akebono	
PICANTO	07 /	**PD/633**				
PICANTO	11 /	**PD/1481**				
PICANTO EX 1.0 1.1 (TODOS)	06 /			**KI/361-CP**	Akebono	Freio traseiro Ø 180x32mm
PREGIO	00 / 02	**PD/69**	Akebono			
PREGIO Furgon / Minibus	97 /	**PD/332**	Bendix			
RIO	03 / 05	**PD/791**				
RIO 1.4 16V / 1.5 CRDi / 1.6 16V / LX	05 /				Mando	
RIO 1.4 GL	03-05 /	**PD/1279**				
RIO 1.5 GLS	03-05 /	**PD/1279**				
RIO 1.6 GLS	03-05 /	**PD/1279**				
SEPHIA	00 / 01	**PD/791**				
SEPHIA 1.5	94 /	**PD/390**	Teves	**AM/323-CP**		
SEPHIA 1.5 / 1.8	94 /	**PD/24**	Teves			

MODEL / *MODELO*	YEAR - *AÑO*	FRONT *DELANTERA*	SYSTEM *SISTEMA*	REAR *TRASERA*	SYSTEM *SISTEMA*	OBS.
KIA MOTORS						
SEPHIA 1.5 16V	96 /	**PD/390**	Teves	**AM/323-CP**		
SEPHIA 1.5 16V	96 /	**PD/24**	Teves			
SEPHIA 1.6	93 /	**PD/390**	Teves	**AM/323-CP**		
SEPHIA 1.6	93 /	**PD/24**	Teves			
SEPHIA 1.8	94 /	**PD/390**	Teves	**AM/323-CP**		
SHUMA 1.6 16V	05-01 /			**AM/323-CP**		
SHUMA 1.8	05-01 /			**AM/323-CP**		
SORENTO	11 /	**PD/1343**		**PD/1366**	Akebono	
SORENTO	10 /	**PD/1287**	Mando			
SORENTO	02 / 09	**PD/634**	Sumitomo	**PD/668**	Mando	
SORENTO	03 / 09			**PD/794**		
SOUL 1.6 / 1.6 CRDi	02-09 /	**PD/635**	Akebono			
SOUL (TODOS)	08 /			**KI/362-CPA**	Mando	Freio traseiro Ø 203x36mm
SOUL 1.6 16V	10 /			**PD/1368**	Akebono	
SPECTRA	04 /	**PD/665**		**PD/666**	Mando	
SPECTRA	01 / 05	**PD/791**				
SPORTAGE	05 / 10	**PD/635**	Akebono	**PD/725**	Akebono	
SPORTAGE	11 /	**PD/1462**				
SPORTAGE 2.0	99 / 03	**PD/486**	Akebono	**KI/360-CP**		
SPORTAGE 2.0 16V	10 /	**PD/1296**	Mando	**PD/1093**	Mando	
SPORTAGE 2.2	99 / 03	**PD/486**	Akebono	**KI/360-CP**		
OPTIMA 2.0 CVVL	14/	**PD/1497**				
OPTIMA 2.4 EX	12/	**PD/1497**				
KING LONG						
XMQ6101Y	09 /	**F/803**		**F/804**		
XMQ6110C	11 /	**F/803**		**F/804**		
XMQ6129Y8	10 /	**F/803**		**F/804**		
XMQ6129Y5	07 /	**F/803**		**F/804**		
XMQ6120C2	09 /	**F/803**		**F/804**		
KNORR BREMSE						
K 85				**PD/175**	Knorr	
K 85				**PD/176**	Knorr	
SB 5000 - MB				**PD/526**	Knorr	
SB 5000 - MB				**PD/533**	Knorr	
SB 6000 - MAN / MB				**PD/120**	Knorr	
SB 7000				**PD/116**	Knorr	
SB 7000 - IVECO				**PD/116**	Knorr	
SB/SN 6000 - TRAILER APPLICATIONS 19.5" WHEELS	05-03 /			**PD/142**	Knorr	
SB/SN 7000 - TRAILER APPLICATIONS 22.5" WHEELS	05-03 /			**PD/141**	Knorr	
SK7 TRAILER APPLICATIONS	/ 04-03			**PD/172**	Knorr	
SK7 TRAILER APPLICATIONS	05-03 /			**PD/147**	Knorr	
KNOTT						
420 x 160,0 mm				**19200 00**		
420 x 180,0 mm				**19032 00**		
KRONE						
3° EIXO	80 /			**4515-G 4524-B**	Bendix	
CARRETA	/ 79			**4514-F**	Bendix	
CARRETA	80 /			**CA/32**	Master	

MODEL / *MODELO*	YEAR - *AÑO*	FRONT *DELANTERA*	SYSTEM *SISTEMA*	REAR *TRASERA*	SYSTEM *SISTEMA*	OBS.
LADA						
LAIKA 2104	90 / 95	**PD/31**	Bendix	**LD/123- S/F**		
LAIKA 2105	90 / 95	**PD/31**	Bendix	**LD/123- S/F**		
LAIKA 2106	90 / 95	**PD/31**	Bendix	**LD/123- S/F**		
LAIKA 2107	90 / 95	**PD/31**	Bendix	**LD/123- S/F**		
NIVA 1.6	90 / 95	**PD/32**	Bendix	**LD/123- S/F**		
NIVA 1.9	90 / 95	**PD/32**	Bendix	**LD/123- S/F**		
NIVA 1600	91 / 00			**LD/123-CP**		Freio traseiro Ø250,0x51,0mm
LAG						
300 x 200,0 mm				**19515/516 00**		SAF Axle
419 x 219,1 mm				**19369/370 00**		ROR Axle
420 x 200,0 mm				**19094 00**		BPW Axle
LAND ROVER						
90	86 / 90	**PD/458-B**	Lockheed			
110	86 / 90	**PD/474**	Lockheed			Disco Solido
110 2.5 / 2.5 D	/ 94	**PD/474**	Lockheed			
90 2.5 / 2.5 D	/ 94	**PD/474**	Lockheed			
DEFENDER 110 2.5 D / TD Couty long	90 /	**PD/474**	Lockheed	**PD/416**	Lockheed	
DEFENDER 110 2.5 TD Hard Top / SW	94 / 95	**PD/474**	Lockheed	**PD/416**	Lockheed	
DEFENDER 110 2.5 TDI	95 /	**PD/474**	Lockheed	**PD/416**	Lockheed	Disco Solido
DEFENDER 110 2.5 TDi	95 /			**PD/416**	Lockheed	
DEFENDER 110 3.5 16V	90 / 93	**PD/458-B**	Lockheed			Disco Ventilado
DEFENDER 110 3.5 16V	93 /	**PD/474**	Lockheed	**PD/416**	Lockheed	
DEFENDER 110 3.5 TDi	95 /			**PD/416**	Lockheed	
DEFENDER 130 2.5 TDi	90 / 95			**PD/416**	Lockheed	
DEFENDER 130 3.5 TDi	90 / 95			**PD/416**	Lockheed	
DEFENDER 90 2.5	92 / 96	**PD/458-B**	Lockheed	**PD/464-B**	Lockheed	
DEFENDER 90 2.5 County Long	90 /	**PD/458-B**	Lockheed	**PD/416**	Lockheed	
DEFENDER 90 2.5 D / TD County Long	90 /	**PD/458-B**	Lockheed	**PD/416**	Lockheed	
DEFENDER 90 2.5 TDI	95 /	**PD/474**	Lockheed	**PD/416**	Lockheed	Disco Solido
DEFENDER 90 2.5 TDi Hard Top / SW	94 /	**PD/474**	Lockheed	**PD/416**	Lockheed	
DEFENDER 90 2.8 i	96 /	**PD/474**	Lockheed	**PD/416**	Lockheed	
DEFENDER 90 3.5	93 / 96	**PD/458-B**	Lockheed	**PD/464-B**	Lockheed	
DEFENDER 90 3.5	92 / 96	**PD/474**	Lockheed	**PD/416**	Lockheed	
DISCOVERY 2.0	94 /	**PD/458-B**	Lockheed			
DISCOVERY 2.0	93 / 98	**PD/458-B**	Lockheed			Disco Ventilado
DISCOVERY 2.5	93 / 98	**PD/458-B**	Lockheed			Disco Ventilado
DISCOVERY 2.5	89 / 93	**PD/458-B**	Lockheed	**PD/464-B**		Disco Ventilado
DISCOVERY 2.5 TDi	87 / 94	**PD/474**	Lockheed	**PD/464-B**	Lockheed	
DISCOVERY 2.5 TDi	95 /	**PD/458-B**	Lockheed	**PD/416**	Lockheed	
DISCOVERY 2.5 TDi / 3.9 V8	95 /	**PD/458-B**	Lockheed	**PD/464-B**	Lockheed	
DISCOVERY 3.5	89 / 94	**PD/458-B**	Lockheed	**PD/464-B**	Lockheed	
DISCOVERY 3.5	93 / 98	**PD/458-B**	Lockheed			Disco Ventilado
DISCOVERY 3.9	93 / 98	**PD/458-B**	Lockheed			Disco Ventilado
DISCOVERY II SE 7 4.0L / 4.6L	00 / 03			**PD/1045**		
DISCOVERY III TD V6 2.7 / V8 2.4	10-04 /	**PD/1069**	Girling	**PD/1070**	Girling	
DISCOVERY IV TD V6 2.7	09 /	**PD/1069**	Girling	**PD/1070**	Girling	
DISCOVERY SD/ SE 7 4.0L	97 / 00	**PD/458-B**		**PD/464-B**		
DISCOVERY SD/ SE 7 4.0L / 4.6L	97 / 98	**PD/458-B**		**PD/464-B**		
FREELANDER I I	10-06 /	**PD/1301**	Teves			
FREELANDER 1.8	98 /	**PD/394**	Girling			
FREELANDER 2.0 TDi	98 /	**PD/394**	Girling			
FREELANDER 2.2	07 /			**PD/1332**	TRW	

MODEL / *MODELO*	YEAR - *AÑO*	FRONT *DELANTERA*	SYSTEM *SISTEMA*	REAR *TRASERA*	SYSTEM *SISTEMA*	OBS.
LAND ROVER						
FREELANDER 3.2 V6	06 /	**PD/1000**	Teves	**PD/1332**	TRW	
FREELANDER TD4 2.2	06 /	**PD/1000**	Teves			
HSE SPORT / HSE 4.4L	05 / 09	**PD/1069**		**PD/1070**		
LR3 SE / HSE 4.4L	05 / 09	**PD/1069**		**PD/1070**		
RANGE ROVER	04 /	**PD/1042-A**	Teves			
RANGER ROVER EVOQUE 2.0	11 /	**PD/1301**	Teves			
RANGE ROVER EVOQUE 2.0 GTDI 240	11 /			**PD/1453**		
RANGE ROVER EVOQUE 2.2 D4 150	11 /			**PD/1453**		
RANGE ROVER EVOQUE 2.2 SD4 190	11 /			**PD/1453**		
RANGE ROVER SPORT 5.0l V8 16V SUPERCHARGED	10 /	**PD/1460**		**PD/1461**		
RANG ROVER 2.5 TD / TDi	90 / 95			**PD/464-B**	Lockheed	
RANG ROVER 2.5 TDi	91 / 96	**PD/458-B**	Lockheed	**PD/464-B**	Lockheed	
RANGE ROVER 2.4	85 / 89			**PD/464-B**		
RANGE ROVER 2.5 Classic	90 / 96	**PD/458-B**	Lockheed			1’
RANGE ROVER 3.5	85 / 89			**PD/464-B**		
RANGE ROVER 3.5	/ 90			**PD/464-B**	Lockheed	
RANGE ROVER 4.4L	95 /	**PD/1042**				
RANGE ROVER 2.4	85 / 89			**PD/464-B**		
RANGE ROVER 2.5 Classic	90 / 96	**PD/458-B**	Lockheed			1’
RANGE ROVER 3.0 TD / 4.4L	02 /			**PD/1038**		
RANGE ROVER 3.5	85 / 89			**PD/464-B**		
RANGE ROVER 3.5	/ 90			**PD/464-B**	Lockheed	
RANGER ROVER 4.2 / 4.4	02-05 /	**PD/1069**	Girling	**PD/1070**	Girling	
RANGER ROVER III 4.2 / 4.4	02-05 /	**PD/1069**	Girling	**PD/1070**	Girling	
RANGER ROVER III SPORT 2.7 / 4.2 / 4.4	02-05 /	**PD/1069**	Girling	**PD/1070**	Girling	
RANGE ROVER OSE / HSE 4.0L / 4.6L	99 / 01			**PD/1045**		
RANGE ROVER SE / HSE 4.0L / 4.6L	97 / 00			**PD/1045**		
LECINENA						
311 x 190,5 mm				**19604/605 00**		
420 x 200,0 mm				**19094 00**		BPW Axle
LECITRAILER						
311 x 190,5 mm				**19604/605 00**		
420 x 200,0 mm				**19094 00**		BPW Axle
LEYLAND						
CONSTRUCTOR 24.15	81 / 83	**19111 00**				
CONSTRUCTOR 24.18	80 / 90	**19111 00**				
CONSTRUCTOR 24.21	80 / 83	**19111 00**				
CONSTRUCTOR 30.19 / 30.20 / 30.21 / 30.23 / 30.25	81 / 82	**19111 00**				
CRUISER 16.15	82 / 83	**19111 00**				
CRUISER 16.18 / 16.21	81 / 90	**19111 00**				
CRUISER 16.23	83 / 90	**19111 00**		**19371 00**		
FA 45.120 / 45.130	91 /			**15817/823 00**		
FA 50.150	90 / 92			**17316 00**		
FREIGHTER 15.11 / 15.14 / 16.14	83 / 90	**19072 00**				
FREIGHTER 16.13 / 16.15	81 / 83	**19072 00**				
FT 80.300 / FT 80.330	90 / 91	**19921 00**		**19921 00**		
FTG 80.330	90 / 91	**19921 00**				19921 00 2nd rear axle
ROADRUNNER 6 SERIES	86 / 91			**15817/823 00**		
ROADRUNNER 8 SERIES	86 / 91			**15817/823 00**		
ROADTRAIN 16.25 / 16.28 / 16.29 / 17.25 / 17.27 / 17.28	80 / 86	**19921 00**		**19921 00**		

MODEL / *MODELO*	YEAR - *AÑO*	FRONT *DELANTERA*	SYSTEM *SISTEMA*	REAR *TRASERA*	SYSTEM *SISTEMA*	OBS.
LEYLAND						
ROADTRAIN 17.29 / 17.30 / 17.32 / 17.34 / 17.35 / 19.28	84 / 86	**19921 00**		**19921 00**		
ROADTRAIN 20.33	88 / 90	**19921 00**				19921 00 2nd rear axle
TERRIER TR 650 / TR 738 / TR 850	70 / 84	**17555 00**				
LEXUS						
ES250	90 / 91			**PD/682**		
ES300	92 / 99			**PD/682**		
ES300	97 / 01	**PD/707**				
GS300	93 / 98	**PD/784**				
GS300	99 / 05	**PD/784**				
GS300	06	**PD/745**				
ES350 3.5 V6	07 /			**PD/753**		Akebono
GS400	98 / 00	**PD/784**				
GS430	01 / 05	**PD/784**				
GX470	03 /	**PD/528**	Sumitomo	**PD/695**	Sumitomo	
IS300	01 / 05	**PD/784**				
LS400	90 / 92	**PD/686**				
LX450	96 / 97			**PD/695**	Sumitomo	
RX300	98 / 01	**PD/707**				
RX300	98 / 03			**PD/682**		
RX330	04 / 06	**PD/764**				
RX350	07 / 09	**PD/764**				
RX400h	06 / 08	**PD/764**				
SC300	92 / 96	**PD/686**				
SC430	02 / 10	**PD/784**				
LINCOLN						
AVIATOR	03 / 05	**PD/770**		**PD/754**		
BLACKWOOD	03 /	**PD/137**		**PD/566**		
CONTINENTAL	93 / 02	**PD/389**	Girling	**PD/696**		
CONTINENTAL 4.6L	97 / 99	**PD/678**		**PD/696**		
LS 3.0L / 3.9L	00 / 06	**PD/1008**		**PD/76**	Varga	
MARK LT	06 / 08	**PD/590**		**PD/591**		
MARK VIII	94 / 96	**PD/678**				
MKS	09 / 10	**PD/1089**		**PD/1090**		
MKX 3.5L	07 / 09	**PD/1080**		**PD/1081**		
MKZ	07 /	**PD/647**		**PD/646**		
NAVIGATOR	98 / 02	**PD/565**		**PD/566**		
NAVIGATOR 4X2 / 4X4	98 / 00	**PD/565**		**PD/566**		
NAVIGATOR 4X2 / 4X4	98 / 02	**PD/565**				
NAVIGATOR 4X2 / 4X4	03 / 06	**PD/750**		**PD/751**		
NAVIGATOR 4X2 / 4X4 5.4L	07 / 10	**PD/1083**				
TOWN CAR	91 / 94			**PD/780**		
TOWN CAR	95 /	**PD/702**		**PD/780**		
TOWN CAR	96 / 97	**PD/702**		**PD/704**		
TOWN CAR	98 / 02	**PD/618**		**PD/705**		
TOWN CAR	03 / 07	**PD/348**		**PD/349**		
TOWN CAR	04 / 10	**PD/348**		**PD/1018**		
ZEPHYR	06 /	**PD/647**		**PD/646**		
LOHR						
419 x 203,0 mm				**19365/366 00**		
MACK						
CH DAY CAB	02	**4720**		**4707**		

MODEL / *MODELO*	YEAR - *AÑO*	FRONT *DELANTERA*	SYSTEM *SISTEMA*	REAR *TRASERA*	SYSTEM *SISTEMA*	OBS.
MACK						
CH ELITE	02	**4720**		**4707**		
CH PREMIUM	02	**4720**		**4707**		
CH SELECT	02	**4720**		**4707**		
CX VISION	02	**4720**		**4707**		
CV 713	02	**4720**		**4707**		
MR 688 S	02	**4720**		**4707**		
RD 690 S	02	**4720**		**4707**		
MAHINDRA						
PICK-UP	07 /	**PD/733**				
SUV	07 /	**PD/733**				
MALDONADO (FREPILCO)						
MALDONADO (FREPILCO)	94 /			**AC/18**		
MALDONADO (FREPILCO)				**4311-RA**		
MALDONADO (FREPILCO)				**AC/30**		
MALDONADO (FREPILCO)				**4644-A**		
MAN						
14.280 HOCL 4x2				**MB/76/77/2**		
14.290 HOCL-NL 4x2				**MB/76/77/2**		
18.360 HOCL 4x2				**MB/76/77/2**		
18.400 HOCL 4x2				**MB/76/77/2**		
18.430 HOCL 4x2				**MB/76/77/2**		
18.440 HOCL 4x2				**MB/76/77/2**		
18.460 HOCL 4x2				**MB/76/77/2**		
18.480 HOCL 4x2				**MB/76/77/2**		
24.440 HOCLN 6x2				**MB/76/77/2**		
24.460 HOCLN 6x2				**MB/76/77/2**		
24.480 HOCLN 6x2				**MB/76/77/2**		
EL - SERIES	93 /	**PD/125**	Meritor			
F 2000 - 19 / 23 / 26 / 27 ton SERIES	94 /	**PD/125**	Meritor			
F 2000 - 19 / 23 / 26 / 27 ton SERIES	94 /	**PD/125 (30mm)**	Meritor			
F 2000 - 33 / 40 ton SERIES	94 /	**PD/125**	Meritor			
F 90 - 19 / 26 / 33 ton SERIES	90 / 96	**PD/125**	Meritor			
F 90 - 24 ton SERIES	90	**PD/125**	Meritor			
F 90 - 25 ton SERIES	90 / 92	**PD/125**	Meritor			
F 90 - 27 / 48 ton SERIES	89 /	**PD/125**	Meritor			
FR 292 4x2	05-85 / 01-93			**MB/76/77/2**		
FRH - SERIES	93 /	**PD/125**	Meritor			
FRH 292 4x2	05-85 / 01-93			**MB/76/77/2**		
FRH 362 4x2	05-85 / 12-92			**MB/76/77/2**		
HELICON -380 6X2	01-87 /			**MB/76/77/2**		
L 2000 - SERIES	09-93 / 12-96	**PD/152**	Wabco			
L 2000 - SERIES	01-96 /	**PD/124**	Wabco	**PD/124**	Wabco	
LION S COACH FRH 352 / RH 353 4x2	09-95 /			**MB/76/77/2**		
LION S COACH FRH 402 / RH 403 4x2	09-95 /			**MB/76/77/2**		
LION S COACH RH 402 6x2	09-98 /			**MB/76/77/2**		
LION S COACH RH 413 6x2	01-00 /			**MB/76/77/2**		
LION S COACH RH 463 6x2	01-00 /			**MB/76/77/2**		
LION S COACH RHC 414 4x2	06-02 /			**MB/76/77/2**		
LION S COMFORT RN 313 4x2	09-96 /			**MB/76/77/2**		
LION S COMFORT RN 353 4x2	06-97 /			**MB/76/77/2**		

MODEL / *MODELO*	YEAR - *AÑO*	FRONT *DELANTERA*	SYSTEM *SISTEMA*	REAR *TRASERA*	SYSTEM *SISTEMA*	OBS.
MAN						
LION S STAR FRH 352 / RH 353 4x2	09-95 /			**MB/76/77/2**		
LION S STAR FRH 402 / RH 403 4x2	09-95 /			**MB/76/77/2**		
LION S STAR FRH 422 4x2	01-93 / 09-96			**MB/76/77/2**		
LION S STAR RH 414 4x2	03-00 /			**MB/76/77/2**		
LION S STAR RH 464 / RHS 464 4x2	03-00 /			**MB/76/77/2**		
LION S STAR RH 464 / RHS 464 6x2	01-02 /			**MB/76/77/2**		
LIONS STAR FRH 422	01-93 / 09-96	**PD/175**	Knorr			
M 2000 - 12 / 14 SERIES	95 /	**PD/124**	Wabco	**PD/124**	Wabco	
M 2000 - 14 SERIES	95 /	**PD/120**	Knorr			
M 2000 - SERIES	95 /	**PD/125**	Meritor			
M-2000	96 /	**PD/117**	Wabco Perrot	**PD/117**	Wabco Perrot	
NG - SERIES	98 /	**PD/125**	Meritor	**PD/125**	Meritor	
NG 262	06-97 / 07-98			**MB/76/77/2**		
NG 272	08-92 / 07-98			**MB/76/77/2**		
NG 312	09-95 / 07-98			**MB/76/77/2**		
NL - SERIES	92 /	**PD/125**	Meritor	**PD/125**	Meritor	
NL 202 4x2	09-89 / 04-94			**MB/76/77/2**		
NL 243 4x2	09-88 /			**MB/76/77/2**		
NL 262 / NL 263 4x2	04-91 /			**MB/76/77/2**		
NL 273 4x2	09-88 /			**MB/76/77/2**		
NÜ - SERIES	96 /	**PD/125**	Meritor	**PD/125**	Meritor	
NÜ - SERIES	96 /	**PD/125 (30mm)**	Meritor	**PD/125 (30mm)**	Meritor	
R 292 4x2	05-85 / 01-93			**MB/76/77/2**		
REGAL	01-57 / 12-68	**PD/155-E**	See			
REGENT	01-57 / 12-68	**PD/155-E**	See			
SD 202 4x2	10-85 / 04-94			**MB/76/77/2**		
SG 240 6x2	09-85 / 04-94			**MB/76/77/2**		
SG 240 H 6x2	11-84 / 09-89			**MB/76/77/2**		
SG 242 6x2	09-85 / 04-94			**MB/76/77/2**		
SG 242 H	11-84 / 09-89			**MB/76/77/2**		
SG 280	01-84 / 12-94			**MB/76/77/2**		
SG 282	01-84 / 12-94			**MB/76/77/2**		
SG 292	01-84 / 12-94			**MB/76/77/2**		
SG 292 H	01-84 / 12-94			**MB/76/77/2**		
SG 312 6x2	02-94 / 06-97			**MB/76/77/2**		
SG 322	02-94 / 06-97			**MB/76/77/2**		
SL 200	01-84 / 12-94			**MB/76/77/2**		
SL 202 4x2	06-84 / 04-93			**MB/76/77/2**		
SL 283 4x2	04-84 / 05-96			**MB/76/77/2**		
SL 353 4x2	04-84 / 05-96			**MB/76/77/2**		
SL 363 4x2	04-84 / 05-96			**MB/76/77/2**		
SR 240	01-86 /			**MB/76/77/2**		
SR 280	01-86 /			**MB/76/77/2**		
SÜ 240 4x2	01-86 / 09-89			**MB/76/77/2**		
SÜ 242 4x2	01-87 / 04-93			**MB/76/77/2**		
SÜ 272 4x2	04-93 / 05-95			**MB/76/77/2**		
SÜ 292 4x2	04-92 / 04-93			**MB/76/77/2**		
SÜ 322 4x2	05-95 / 06-97			**MB/76/77/2**		
TG-A - 18 to 41 ton	10-01 /	**PD/129**	Meritor	**PD/129**	Meritor	
TG-A - 18 ton	10-01 /	**PD/129**	Meritor	**PD/129**	Meritor	
TG-A - 18 / 26 ton SERIES	00 / 01	**PD/125**	Meritor	**PD/125**	Meritor	
TG-A - 18 / 26 ton SERIES	00 / 01	**PD/125 (30mm)**	Meritor	**PD/125 (30mm)**	Meritor	

MODEL / *MODELO*	YEAR - *AÑO*	FRONT *DELANTERA*	SYSTEM *SISTEMA*	REAR *TRASERA*	SYSTEM *SISTEMA*	OBS.
MAN						
TGX 28.440 6x2	12 /	**MB/185**	MAN	**MB/188**	MAN	3° eixo MB/188
TGX 29.440 6x4	12 /	**MB/185**	MAN	**MB/188**	MAN	3° eixo MB/188
TGX 33.440 6x4	12 /	**MB/185**	MAN	**MB/188**	MAN	3° eixo MB/188
TGS 18.320 FK, FK-L, FLK, FLK/M	07 -10 /	**PD/214**		**PD/214**		
TGS 18.320 FLS, FLS/M, FLS-TS, FLRS, FLRS/M, FLLS, FLLS/N,FLLRS	07 -10 /	**PD/214**		**PD/214**		
TGS 18.320 FAC, FHLC	07 -10 /	**PD/214**		**PD/214**		
TGS 18.320 FAK, FAK-L, FALK, FALK-L, FHLK, FHLK/M	07 -10 /	**PD/214**		**PD/214**		
TGS 18.320 FAS, FHLS, FHLS/M, FALS	07 -10 /	**PD/214**		**PD/214**		
TGS 18.350 FAC	07 -10 /	**PD/214**		**PD/214**		
TGS 18.350 FAS	07 -10 /	**PD/214**		**PD/214**		
TGS 18.350 FAK	07 -10 /	**PD/214**		**PD/214**		
TGS 18.360 FC, FLC, FLRC, FLLC, FLLRC, FLLW, FLLW/N	07 -10 /	**PD/214**		**PD/214**		
TGS 18.360 FK, FK-L, FLK, FLK/M	07 -10 /	**PD/214**		**PD/214**		
TGS 18.360 FLS, FLS/M, FLS-TS, FLRS, FLRS/M, FLLS, FLLS/N, FLLRS	07 -10 /	**PD/214**		**PD/214**		
TGS 18.360 FAC, FHLC	07 -10 /	**PD/214**		**PD/214**		
TGS 18.360 FAK, FAK-L, FALK, FALK-L, FHLK, FHLK/M	07 -10 /	**PD/214**		**PD/214**		
TGS 18.360 FAS, FALS, FHLS, FHLS/M	07 -10 /	**PD/214**		**PD/214**		
TGS 18.390 FAC, FHLC	08 -06 /	**PD/214**		**PD/214**		
TGS 18.390 FAK	08 -06 /	**PD/214**		**PD/214**		
TGS 18.390 FAS	08 -06 /	**PD/214**		**PD/214**		
TGS 18.400 FC, FLC, FLRC, FLLC, FLLRC, FLLW, FLLW/N	07 -10 /	**PD/214**		**PD/214**		
TGS 18.400 FK, FK-L, FLK, FLK/M	07 -10 /	**PD/214**		**PD/214**		
TGS 18.400 FLS, FLS/M, FLS-TS, FLRS, FLRS/M, FLLS, FLLS/N, FLLRS	07 -10 /	**PD/214**		**PD/214**		
TGS 18.400 FAC, FHLC	07 -10 /	**PD/214**		**PD/214**		
TGS 18.400 FAK, FAK-L, FALK, FALK-L, FHLK, FHLK/M	07 -10 /	**PD/214**		**PD/214**		
TGS 18.400 FAS, FALS, FHLS, FHLS/M	07 -10 /	**PD/214**		**PD/214**		
TGS 18.430 FAC	07 -10 /	**PD/214**		**PD/214**		
TGS 18.430 FAK	07 -10 /	**PD/214**		**PD/214**		
TGS 18.430 FAS	07 -10 /	**PD/214**		**PD/214**		
TGS 18.440 FC, FLC, FLRC, FLLC, FLLRC, FLLW, FLLW/N	07 -10 /	**PD/214**		**PD/214**		
TGS 18.440 FC, FLC, FLRC, FLLC, FLLRC, FLLW, FLLW/N	07 -10 /	**PD/214**		**PD/214**		
TGS 18.440 FK, FK-L, FLK, FLK/M	07 -10 /	**PD/214**		**PD/214**		
TGS 18.440 FK, FK-L, FLK	07 -10 /	**PD/214**		**PD/214**		
TGS 18.440 FLS, FLS/M, FLS-TS, FLRS, FLRS/M, FLLS, FLLS/N, FLLRS	07 -10 /	**PD/214**		**PD/214**		
TGS 18.440 FLS, FLS/M, FLS-TS, FLRS, FLRS/M, FLLS, FLLS/N, FLLRS	07 -10 /	**PD/214**		**PD/214**		
ÜL 242 4x2	09-89 / 03-93			**MB/76/77/2**		
ÜL 272 4x2	03-93 /			**MB/76/77/2**		
ÜL 292 4x2	09-89 / 03-93			**MB/76/77/2**		
MAN BUSES						
332 F	/ 03-86			**19496 00**		
CHASSI DE ÔNIBUS URBANO 17230/260 OD EURO V		**MP/410**		**MP/411**		COM ABS
CR160 (Ikarus)	77 /	**17682 00**				
EL 202 1 / 93-6 / 97	01-93 / 06-97			**19496 00**		
EL 222 1 / 93-6 / 97	01-93 / 06-97			**19496 00**		
EL 262 191 / 260 7 / 98	07-98 /			**19496 00**		
EL 262 4 / 94-6 / 97	04-94 / 06-97			**19496 00**		
FR 292	/ 03-86			**19496 00**		
FR 292 4x2	05-85 / 01-93			**19707/581 00**		
FR 292 5/85-1/93	05-85 / 01-93	**19579/580 00**		**19581/582 00**		
FRH 292	/ 03-86			**19496 00**		
FRH 292 4x2	05-85 / 01-93			**19707/581 00**		

MODEL / *MODELO*	YEAR - *AÑO*	FRONT *DELANTERA*	SYSTEM *SISTEMA*	REAR *TRASERA*	SYSTEM *SISTEMA*	OBS.
MAN BUSES						
FRH 352	09-95 /			**19581/582 00**		
FRH 352 / RH 353 4x2	09-95 /			**19707/581 00**		
FRH 352 / RH 353 4x2	09-95 /			**19707/581 00**		
FRH 362	/ 03-86			**19496 00**		
FRH 362 4x2	05-85 / 12-92			**19707/581 00**		
FRH 402	09-95 /			**19581/582 00**		
FRH 402 / RH 403 4x2	09-95 /			**19707/581 00**		
FRH 402 / RH 403 4x2	09-95 /			**19707/581 00**		
FRH 422	01-93 / 09-96			**19581/582 00**		
FRH 422 4x2	01-93 / 09-96			**19707/581 00**		
FRH292 5/85-1/93	05-85 / 01-93	**19579/580 00**		**19581/582 00**		
FRH362 5/85-12/92	05-85 / 92	**19579/580 00**		**19581/582 00**		
HELICON -380 6X2	01-87 /			**19707/581 00**		
NG 262	06-97 / 07-98			**19707/581 00**		
NG 272	90 /	**19579/580 00**		**19581/582 00**		19579/580 00 auxiliary axle
NG 272	08-92 / 07-98			**19707/581 00**		
NG 312	09-95 / 07-98			**19707/581 00**		
NL 202	09-89 / 04-94	**19579/580 00**		**19581/582 00**		
NL 202 4x2	09-89 / 04-94			**19707/581 00**		
NL 243 4x2	09-88 /			**19707/581 00**		
NL 262 / NL 263 4x2	04-91 /			**19707/581 00**		
NL 273 4x2	09-88 /			**19707/581 00**		
R 292	/ 03-86			**19496 00**		
R 292	05-85 / 01-93	**19579/580 00**		**19581/582 00**		
R 292 4x2	05-85 / 01-93			**19707/581 00**		
RH 353	09-95 /			**19581/582 00**		
RH 402 6x2	09-98 /			**19707/581 00**		
RH 403	09-95 /			**19581/582 00**		
RH 413 6x2	01-00 /			**19707/581 00**		
RH 414 4x2	03-00 /			**19707/581 00**		
RH 463 6x2	01-00 /			**19707/581 00**		
RH 464 / RHS 464 4x2	03-00 /			**19707/581 00**		
RH 464 / RHS 464 6x2	01-02 /			**19707/581 00**		
RHC 414 4x2	06-02 /			**19707/581 00**		
RN 313	09-96 /			**19581/582 00**		
RN 313 4x2	09-96 /			**19707/581 00**		
RN 353	06-97 /			**19581/582 00**		
RN 353 4x2	06-97 /			**19707/581 00**		
RU 280	80 / 04-83			**19496 00**		
RÜ 240	80 / 04-83			**19496 00**		
SD 200	04-74 / 12-86			**19496 00**		
SD 202	08-75 / 03-86			**19496 00**		
SD 202	10-85 / 04-94	**19579/580 00**		**19581/582 00**		
SD 202 4x2	10-85 / 04-94			**19707/581 00**		
SG 220	07-76 / 01-85			**19496 00**		
SG 220	05-80 / 01-86			**19496 00**		
SG 240 6x2	09-85 / 04-94			**19707/581 00**		
SG 240 H	09-85 / 04-94	**19579/580 00**		**19581/582 00**		19579/580 00 auxiliary axle
SG 240 H	11-84 / 09-89	**19579/580 00**		**19581/582 00**		19579/580 00 auxiliary axle
SG 240 H 6x2	11-84 / 09-89			**19707/581 00**		
SG 240 HÜ	05-80 / 01-86			**19496 00**		
SG 242	/ 03-86			**19496 00**		
SG 242	09-85 / 04-94	**19579/580 00**		**19581/582 00**		19579/580 00 auxiliary axle
SG 242 6x2	09-85 / 04-94			**19707/581 00**		

MODEL / *MODELO*	YEAR - *AÑO*	FRONT *DELANTERA*	SYSTEM *SISTEMA*	REAR *TRASERA*	SYSTEM *SISTEMA*	OBS.
MAN BUSES						
SG 242 H	11-84 / 09-89			**19707/581 00**		
SG 242 H	05-80 / 01-86			**19496 00**		
SG 242 H	09-85 / 04-94	**19579/580 00**		**19581/582 00**		19579/580 00 auxiliary axle
SG 280	01-84 / 12-94			**19707/581 00**		
SG 280	/ 03-86			**19496 00**		
SG 280	04-86 /	**19579/580 00**		**19581/582 00**		19579/580 00 auxiliary axle
SG 282	01-84 / 12-94			**19707/581 00**		
SG 282	/ 03-86			**19496 00**		
SG 282	04-86 /	**19579/580 00**		**19581/582 00**		19579/580 00 auxiliary axle
SG 292	01-84 / 12-94			**19707/581 00**		
SG 292	09-85 /	**19579/580 00**		**19581/582 00**		19579/580 00 auxiliary axle
SG 292 H	01-84 / 12-94			**19707/581 00**		
SG 292 H	11-84 / 09-89	**19579/580 00**		**19581/582 00**		19579/580 00 auxiliary axle
SG 312 6x2	02-94 / 06-97			**19707/581 00**		
SG 322	02-94 / 06-97			**19707/581 00**		
SL 200	01-84 / 12-94			**19707/581 00**		
SL 200	05-80 / 04-87			**19496 00**		
SL 200	04-86 /	**19579/580 00**		**19581/582 00**		
SL 202	08-75 / 03-86			**19496 00**		
SL 202	06-84 / 04-94	**19579/580 00**		**19581/582 00**		
SL 202 4x2	06-84 / 04-93			**19707/581 00**		
SL 283 4x2	04-84 / 05-96			**19707/581 00**		
SL 353 4x2	04-84 / 05-96			**19707/581 00**		
SL 363 4x2	04-84 / 05-96			**19707/581 00**		
SM 152	11-87 / 04-94	**17017 00**		**19177 00**		
SM 182	11-87 / 02-95	**17017 00**		**19177 00**		
SM 192	11-87 / 02-95	**17017 00**		**19177 00**		
SR 240	01-86 /			**19707/581 00**		
SR 240	10-75 / 06-83			**19496 00**		
SR 240	04-86 /	**19579/580 00**		**19581/582 00**		
SR 280	01-86 /			**19707/581 00**		
SR 280	77 / 11-86			**19496 00**		
SR 280	04-86 /	**19579/580 00**		**19581/582 00**		
SR 280 H	77 / 11-86			**19496 00**		
SR 320	81 / 03-86			**19496 00**		
SR 321 H	03-82 / 11-86			**19496 00**		
SR 361	07-78 / 03-86			**19496 00**		
SÜ 240	05-80 / 01-86			**19496 00**		
SÜ 240	01-86 / 09-90	**19579/580 00**		**19581/582 00**		
SÜ 240 4x2	01-86 / 09-89			**19707/581 00**		
SÜ 242	01-87 / 04-93	**19579/580 00**		**19581/582 00**		
SÜ 242 4x2	01-87 / 04-93			**19707/581 00**		
SÜ 272	04-93 / 05-95	**19579/580 00**		**19581/582 00**		
SÜ 272 4x2	04-93 / 05-95			**19707/581 00**		
SÜ 280	02-77 / 03-86			**19496 00**		
SÜ 292	04-92 / 04-93	**19579/580 00**		**19581/582 00**		
SÜ 292 4x2	04-92 / 04-93			**19707/581 00**		
SÜ 322	05-95 / 06-97	**19579/580 00**		**19581/582 00**		
SÜ 322 4x2	05-95 / 06-97			**19707/581 00**		
ÜL 242	09-89 / 03-93	**19579/580 00**		**19581/582 00**		
ÜL 242 4x2	09-89 / 03-93			**19707/581 00**		
ÜL 272 4x2	03-93 /			**19707/581 00**		
ÜL 292	09-89 / 03-93	**19579/580 00**		**19581/582 00**		
ÜL 292 4x2	09-89 / 03-93			**19707/581 00**		

MODEL / *MODELO*	YEAR - *AÑO*	FRONT *DELANTERA*	SYSTEM *SISTEMA*	REAR *TRASERA*	SYSTEM *SISTEMA*	OBS.
MAN TRUCKS						
6.100	87 / 93	**15817/823 00**		**15817/823 00**		to 8,5 tons Perrot
8.100	87 / 93	**15817/823 00**		**15817/823 00**		to 8,5 tons Perrot
8.150	87 / 93	**15817/823 00**		**15817/823 00**		to 8,5 tons Perrot
9.150	87 / 93	**15817/823 00**		**15817/823 00**		to 8,5 tons Perrot
10.150	87 / 93	**15817/823 00**		**15817/823 00**		to 8,5 tons Perrot
12.152	12-88 / 05-94	**17017 00**		**19177 00**		
12.192	07-90 / 06-96	**17017 00**		**19177 00**		
12.222	05-94 / 06-96	**17017 00**		**19177 00**		
12.232	08-88 / 06-96	**17017 00**		**19177 00**		
12.262	08-95 / 06-96	**17017 00**		**19177 00**		
12.272	09-91 / 06-96	**17017 00**		**19177 00**		
14.152	12-88 / 06-96	**17017 00**		**19177 00**		
14.162	08-95 / 06-96	**17017 00**		**19177 00**		
14.192	77 / 88	**17682 00**		**19495 00**		
14.192	08-88 / 06-96	**17017 00**		**19177 00**		
14.220	02-82 / 89	**17238 00**		**19495 00**		19496 00 rear optional
14.222	05-94 / 06-96	**17017 00**		**19177 00**		
14.232	08-88 / 06-96	**17017 00**		**19177 00**		
14.240	04-78 / 90	**17238 00**		**19495 00**		19496 00 rear optional
14.262	08-95 / 06-96	**17017 00**		**19177 00**		
14.272	09-91 / 06-96	**17017 00**		**19177 00**		
15.168	83 / 89	**17238 00**		**19495 00**		
15.220	02-82 / 89			**19495 00**		19496 00 rear optional
15.240	02-82 / 89			**19495 00**		19496 00 rear optional
16.240	01-82 / 89			**19495 00**		19496 00 rear optional
16.280	02-79 / 89			**19495 00**		19496 00 rear optional
16.291	02-79 / 89			**19495 00**		19496 00 rear optional
16.331	05-81 / 88			**19496 00**		
16.332	08-86 / 89	**19495 00**		**19496 00**		
16.360	08-86 / 89			**19495 00**		19496 00 rear optional
16.362	08-86 / 89	**19495 00**		**19496 00**		
17.136	04-84 / 89			**19495 00**		19496 00 rear optional
17.152	08-87 / 89			**19496 00**		
17.170	02-84 / 89			**19495 00**		19496 00 rear optional
17.182	08-87 / 89			**19496 00**		
17.192	02-84 / 89			**19495 00**		19496 00 rear optional
17.220	06-81 / 90			**19495 00**		19496 00 rear optional
17.222	08-87 / 89			**19496 00**		
17.232	08-87 / 89			**19495 00**		19496 00 rear optional
17.240	08-79 / 89			**19495 00**		19496 00 rear optional
17.272				**19496 00**		
17.322				**19496 00**		
17.332				**19496 00**		
17.373				**19496 00**		
17.422				**19496 00**		
17.502				**19496 00**		
18.192				**19495 00**		
18.222				**19495 00**		
18.232				**19495 00**		
18.262				**19495 00**		
18.272				**19495 00**		
19.240	01-79 / 90			**19496 00**		
19.281	01-79 / 90			**19496 00**		
19.291	01-79 / 90			**19496 00**		

MODEL / *MODELO*	YEAR - *AÑO*	FRONT *DELANTERA*	SYSTEM *SISTEMA*	REAR *TRASERA*	SYSTEM *SISTEMA*	OBS.
MAN TRUCKS						
19.321	01-79 / 90			**19496 00**		
19.331	01-79 / 90			**19496 00**		
19.361	01-79 / 90			**19496 00**		
20.240	05-78 / 90			**19495 00**		19496 00 rear optional
20.280	05-78 / 90			**19495 00**		19496 00 rear optional
22.331	05-78 / 90			**19495 00**		19496 00 rear optional
24.192	02-80 / 90			**19495 00**		19496 00 rear optional
24.192				**19495 00**		17238 00 trailer axle
24.220	80 / 88			**19495 00**		19496 00 rear optional
24.222				**19495 00**		17238 00 trailer axle
24.232				**19495 00**		17238 00 trailer axle
24.240	02-80 / 90			**19495 00**		19496 00 rear optional
24.272				**19495 00**		17238 00 trailer axle
24.291	02-80 / 90			**19495 00**		19496 00 rear optional
24.331	02-80 / 90			**19495 00**		19496 00 rear optional
24.361	02-80 / 90			**19495 00**		19496 00 rear optional
27.272	01-89 / 94			**19496 00**		
27.322	01-89 / 94			**19496 00**		
27.372	01-89 / 94			**19496 00**		
27.422	01-89 / 94			**19496 00**		
30.291	02-84 / 86			**19495 00**		19496 00 rear optional
30.331	02-84 / 86			**19495 00**		19496 00 rear optional
32.240	08-79 / 89			**19495 00**		19495 00 2nd rear axle
32.240	08-79 / 88			**19496 00**		19496 00 2nd rear axle
32.242	88 / 94	**19495 00**		**19496 00**		19495 00 2nd front axle 19496 00 2nd rear axle
32.262	89 / 94	**19495 00**		**19496 00**		19495 00 2nd front axle 19496 00 2nd rear axle
32.281	08-79 / 89			**19495 00**		19495 00 2nd rear axle
32.281	08-79 / 88			**19496 00**		19496 00 2nd rear axle
32.291	08-79 / 89			**19495 00**		19495 00 2nd rear axle
32.291	08-79 / 88			**19496 00**		19496 00 2nd rear axle
32.321	08-79 / 89			**19495 00**		19495 00 2nd rear axle
32.321	08-79 / 88			**19496 00**		19496 00 2nd rear axle
32.331	08-79 / 89			**19495 00**		19495 00 2nd rear axle
32.331	08-79 / 88			**19496 00**		19496 00 2nd rear axle
32.361	08-79 / 89			**19495 00**		19495 00 2nd rear axle
32.361	08-79 / 88			**19496 00**		19496 00 2nd rear axle
33.242	09-87 / 94	**19495 00**		**19496 00**		19496 00 2nd rear axle
33.291	03-82 / 88			**19495 00**		19495 00 2nd rear axle
33.291	03-82 / 88			**19496 00**		19496 00 2nd rear axle
33.331	03-82 / 88			**19495 00**		19495 00 2nd rear axle
33.331	03-82 / 88			**19496 00**		19496 00 2nd rear axle
40.242	87 /	**19495 00**		**19496 00**		
40.262	87 /	**19495 00**		**19496 00**		
40.292	87 /	**19495 00**		**19496 00**		
40.332	87 /	**19495 00**		**19496 00**		
40.362	87 /	**19495 00**		**19496 00**		
40.365	/ 87			**19496 00**		19496 00 2nd rear axle
40.400	82 / 88			**19496 00**		19496 00 2nd rear axle
40.440	82 / 88			**19496 00**		19496 00 2nd rear axle
41.361	03-82 / 88			**19495 00**		19496 00 rear optional
14.163 LK	08-95 /	**17017 00**		**19177 00**		
14.163 / LC / LLC	08-95 /			**19177 00**		
14.224 LC / LLC / LL	08-95 /			**19177 00**		

MODEL / *MODELO*	YEAR - *AÑO*	FRONT *DELANTERA*	SYSTEM *SISTEMA*	REAR *TRASERA*	SYSTEM *SISTEMA*	OBS.
MAN TRUCKS						
14.224 LK / LAK / MK / MAK	08-95 /	**17017 00**		**19177 00**		
14.224 MC / MLC / ML / MLS	08-95 /			**19177 00**		
14.264 LAC / LK / LAK	08-95 /	**17017 00**		**19177 00**		
14.264 LC / LLC / LL	08-95 /			**19177 00**		
14.264 MC / MLC / ML	08-95 /			**19177 00**		
14.264 MLS	08-95 /			**19177 00**		
14.272 U	05-89 /	**19495 00**		**19496 00**		
14.280 HOCL 4x2				**19707/581 00**		
14.290 HOCL-NL 4x2				**19707/581 00**		
15.163 LC / LLC	08-95 /			**19495 00**		19496 00 rear optional
15.163 LK	08-95 /			**19495 00**		
15.224 LC / LLC / LL	08-95 /			**19495 00**		19496 00 rear optional
15.224 LK	08-95 /			**19495 00**		
15.264 LC / LLC / LL	08-95 /			**19495 00**		19496 00 rear optional
15.264 LK	08-95 /			**19495 00**		
18.224 LC / LLC / LL	08-95 /			**19495 00**		19496 00 rear optional
18.224 LK / LLK / LAK	08-95 /			**19495 00**		
18.224 MC / MLC / ML MLS	08-95 /			**19495 00**		19496 00 rear optional
18.224 MK / MLK / MAK	08-95 /			**19495 00**		
18.264 LC / LLC / LL	08-95 /			**19495 00**		19496 00 rear optional
18.264 LK / LLK / LAK	08-95 /			**19495 00**		
18.264 MC / MLC / ML / MLS	08-95 /			**19495 00**		19496 00 rear optional
18.264 MK / MLK / MAK	08-95 /			**19495 00**		
18.360 HOCL 4x2				**19707/581 00**		
18.400 HOCL 4x2				**19707/581 00**		
18.430 HOCL 4x2				**19707/581 00**		
18.440 HOCL 4x2				**19707/581 00**		
18.460 HOCL 4x2				**19707/581 00**		
18.480 HOCL 4x2				**19707/581 00**		
19.233 FCNG	96 /			**19496 00**		
19.242 F / FL / FLL	01-88 / 02-89	**19495 00**		**19496 00**		
19.242 FS / FLS / FK	01-88 / 02-89	**19495 00**		**19496 00**		
19.262 F / FL / FLL	01-88 / 02-90	**19495 00**		**19496 00**		
19.262 FA / FAK / FAZ 4x4	02-89 / 02-90			**19496 00**		
19.262 FS / FLS / FK	01-88 / 02-90	**19495 00**		**19496 00**		
19.272 F / FL / FLL	02-90 / 05-95	**19495 00**		**19496 00**		
19.272 FA / FAK / FAZ 4x4	02-90 / 05-95			**19496 00**		
19.272 FS / FLS / FK	02-90 / 05-95	**19495 00**		**19496 00**		
19.273 F / FL / FLL / FS / FLS	94 / 95			**19496 00**		
19.273 FA / FK / FAK	94 / 95	**19495 00**		**19496 00**		
19.292 F / FL / FLL	07-86 / 02-90	**19495 00**		**19496 00**		
19.292 FA / FAK / FAZ 4x4	05-88 / 02-90			**19496 00**		
19.292 FS / FLS / FK	07-86 / 02-90	**19495 00**		**19496 00**		
19.293 FC / FLC / FL / FS / FLS	94 /			**19496 00**		
19.293 FK / FLK / FAC / FAS / FAK	94 /	**19495 00**		**19496 00**		
19.322 F / FL / FLL	02-90 / 05-95	**19495 00**		**19496 00**		
19.322 FA / FAK / FAZ 4x4	02-90 / 06-96			**19496 00**		
19.322 FS / FLS / FK	02-90 / 05-95	**19495 00**		**19496 00**		
19.322 U / UL	05-89 /	**19495 00**		**19496 00**		
19.322 U / ULL	02-90 / 05-94	**19495 00**		**19496 00**		
19.323 FAC / FAS / FK / FLK / FAK	94 / 95	**19495 00**		**19496 00**		
19.323 FC / FLC / FL / FS / FLS	94 / 95			**19496 00**		
19.332 F / FL / FLL	07-86 / 02-90	**19495 00**		**19496 00**		
19.332 FA / FAK / FAZ 4x4	05-88 / 02-90			**19496 00**		

MODEL / *MODELO*	YEAR - *AÑO*	FRONT *DELANTERA*	SYSTEM *SISTEMA*	REAR *TRASERA*	SYSTEM *SISTEMA*	OBS.
MAN TRUCKS						
19.332 FS / FLS / FK	07-86 / 02-90	**19495 00**		**19496 00**		
19.332 U / ULL	07-86 / 02-90	**19495 00**		**19496 00**		
19.342 F / FL / FLL	05-94 / 05-95	**19495 00**		**19496 00**		
19.342 FA / FAK / FAZ 4x4	05-94 / 06-96			**19496 00**		
19.342 FS / FLS / FK	05-94 / 05-95	**19495 00**		**19496 00**		
19.343 FAC / FAS / FK / FLK / FAK	94 /	**19495 00**		**19496 00**		
19.343 FC / FLC / FL / FS / FLS	94 / 95			**19496 00**		
19.362 F / FK / FL / FLL	07-86 / 02-90	**19495 00**		**19496 00**		
19.362 FA / FAK / FAZ 4x4	05-88 / 02-90			**19496 00**		
19.362 FS / FLS / U / ULL	07-86 / 01-91	**19495 00**		**19496 00**		
19.372 F / FL / FLL / U / ULL	02-90 / 05-95	**19495 00**		**19496 00**		
19.372 FA / FAK / FAZ 4x4	02-90 / 06-96			**19496 00**		
19.372 U / UL	05-89 /	**19495 00**		**19496 00**		
19.373 FAC / FAS / FK / FLK / FAK	94 / 95	**19495 00**		**19496 00**		
19.373 FC / FLC / FL / FS / FLS	94 /			**19496 00**		
19.402 F / FL / C3484FLL	05-94 / 05-95	**19495 00**		**19496 00**		
19.402 FA / FAK / FAZ 4x4	05-94 / 06-96			**19496 00**		
19.402 FS / FLS / FK	05-94 / 05-95	**19495 00**		**19496 00**		
19.403 FAC / FAS / FK / FLK / FAK	94 /	**19495 00**		**19496 00**		
19.403 FC / FLC / FL / FS / FLS	94 /			**19496 00**		
19.422 F / FL / FLL	02-90 / 05-95	**19495 00**		**19496 00**		
19.422 FA / FAK / FAZ 4x4	02-90 / 06-96			**19496 00**		
19.422 FS / FLS / FK / U / ULL	02-90 / 05-95	**19495 00**		**19496 00**		
19.422 U / UL	05-89 /	**19495 00**		**19496 00**		
19.423 FAC / FAS / FK / FLK / FAK	94 / 95	**19495 00**		**19496 00**		
19.423 FC / FLC / FL / FS / FLS	94 / 95			**19496 00**		
19.462 F / FL / FS / FLS / FK	05-87 / 02-90	**19495 00**		**19496 00**		
19.463 FAC / FAS / FK / FLK / FAK	94 /	**19495 00**		**19496 00**		
19.463 FC / FLC / FL / FS / FLS	94 /			**19496 00**		
19.502 F / FL / FLL	02-90 / 06-96	**19495 00**		**19496 00**		
19.502 FK	08-89 /	**19495 00**		**19496 00**		
19.502 FS / FLS	02-90 / 06-96	**19495 00**		**19496 00**		
19.603 FLS	04-96 /			**19496 00**		
23.272 FNL	09-86 / 94	**19495 00**		**19496 00**		17238 00 auxiliary axle
23.293 FNLLC	94 /			**19496 00**		17238 00 auxiliary axle
23.322 FNL	09-86 / 94	**19495 00**		**19496 00**		17238 00 auxiliary axle
23.343 FNLLC	94 /			**19496 00**		17238 00 auxiliary axle
23.372 FNL	09-86 / 94	**19495 00**		**19496 00**		17238 00 auxiliary axle
23.403 FNLLC	94 /			**19496 00**		17238 00 auxiliary axle
23.422 FNL	09-86 / 94	**19495 00**		**19496 00**		17238 00 auxiliary axle
23.463 FNLLC	94 /			**19496 00**		17238 00 auxiliary axle
24.242 DF / DFS / DFK	01-88 / 07-89	**19495 00**		**19496 00**		
24.242 FNL / FNLL	01-88 / 02-90	**19495 00**		**19496 00**		17238 00 auxiliary axle
24.262 DF / DFS / DFLS / DFK	01-88 / 02-90	**19495 00**		**19496 00**		
24.262 FNL / FNLL	01-88 / 06-96	**19495 00**		**19496 00**		17238 00 auxiliary axle
24.272 DF / DFS / DFLS / DFK	02-90 / 12-90	**19495 00**		**19496 00**		
24.272 FNL / FNLL	02-90 / 05-95	**19495 00**		**19496 00**		17238 00 auxiliary axle
24.272 FNLS / FVLS	02-90 / 05-95	**19495 00**		**19496 00**		17238 00 auxiliary axle
24.273 FNLLC	94 / 95	**19495 00**		**19496 00**		
24.292 DF / DFS / DFLS / DFK	04-87 / 02-90	**19495 00**		**19496 00**		
24.292 FNL / FNLL	10-86 / 02-90	**19495 00**		**19496 00**		17238 00 auxiliary axle
24.292 FNLS / FVLS	10-86 / 02-90	**19495 00**		**19496 00**		17238 00 auxiliary axle
24.293 FNLLC	94 /	**19495 00**		**19496 00**		
24.302 DF / DFS / DFLS / DFK	02-90 / 05-95	**19495 00**		**19496 00**		

MODEL / *MODELO*	YEAR - *AÑO*	FRONT *DELANTERA*	SYSTEM *SISTEMA*	REAR *TRASERA*	SYSTEM *SISTEMA*	OBS.
MAN TRUCKS						
24.302 FNL / FNLL	05-90 / 10-90	**19495 00**		**19496 00**		17238 00 auxiliary axle
24.322 DF / DFS / DFLS / DFK	02-90 / 12-90	**19495 00**		**19496 00**		
24.322 FNL / FNLL	02-90 / 05-95	**19495 00**		**19496 00**		17238 00 auxiliary axle
24.322 FNLS / FLS	02-90 / 05-95	**19495 00**		**19496 00**		17238 00 auxiliary axle
24.322 UNL / UNLL	02-90 / 12-90	**19495 00**		**19496 00**		17238 00 auxiliary axle
24.323 FNLLC	94 / 95	**19495 00**		**19496 00**		
24.332 DF / DFS / DFLS / DFK	04-87 / 02-90	**19495 00**		**19496 00**		
24.332 FNL / FNLL	10-86 / 02-90	**19495 00**		**19496 00**		17238 00 auxiliary axle
24.332 FNLS / FVLS	10-86 / 02-90	**19495 00**		**19496 00**		17238 00 auxiliary axle
24.332 U / UL	86 /	**19495 00**		**19496 00**		17238 00 auxiliary axle
24.332 UNL / UNLL	10-86 / 02-90	**19495 00**		**19496 00**		17238 00 auxiliary axle
24.342 FNL / FNLL	05-94 / 05-95	**19495 00**		**19496 00**		17238 00 auxiliary axle
24.343 FNLLC	94 /	**19495 00**		**19496 00**		
24.362 DF / DFS / DFLS / DFK	04-87 / 02-90	**19495 00**		**19496 00**		
24.362 FNL / FNLL	10-86 / 02-90	**19495 00**		**19496 00**		17238 00 auxiliary axle
24.362 FNLS / FVLS	10-86 / 02-90	**19495 00**		**19496 00**		17238 00 auxiliary axle
24.362 U / UL	86 /	**19495 00**		**19496 00**		17238 00 auxiliary axle
24.362 UNL / UNLL	10-86 / 02-90	**19495 00**		**19496 00**		17238 00 auxiliary axle
24.372 DF / DFS / DFLS / DFK	02-90 / 04-95	**19495 00**		**19496 00**		
24.372 FNL / FNLL	02-90 / 05-95	**19495 00**		**19496 00**		17238 00 auxiliary axle
24.372 FNLS / FVLS	02-90 / 05-95	**19495 00**		**19496 00**		17238 00 auxiliary axle
24.372 FVL / FVLS	05-90 / 12-90	**19495 00**		**19496 00**		17238 00 auxiliary axle
24.372 UNL / UNLL	02-90 / 12-90	**19495 00**		**19496 00**		17238 00 auxiliary axle
24.402 FNL / FNLL	05-94 / 05-95	**19495 00**		**19496 00**		17238 00 auxiliary axle
24.403 FNLLC	94 /	**19495 00**		**19496 00**		
24.422 DF / DFS / DFLS / DFK	02-90 / 12-90	**19495 00**		**19496 00**		
24.422 FNL / FNLL	02-90 / 05-95	**19495 00**		**19496 00**		17238 00 auxiliary axle
24.422 UNL / UNLL	02-90 / 12-90	**19495 00**		**19496 00**		17238 00 auxiliary axle
24.423 FNLLC	94 / 95	**19495 00**		**19496 00**		
24.440 HOCLN 6x2				**19707/581 00**		
24.462 DF / DFS / DFLS / DFK	02-89 / 02-90	**19495 00**		**19496 00**		
24.462 FNL	04-89 / 02-90	**19495 00**		**19496 00**		17238 00 auxiliary axle
24.462 FVLS	05-87 / 07-87	**19495 00**		**19496 00**		17238 00 auxiliary axle
24.463 FNLLC	94 /	**19495 00**		**19496 00**		
24.480 HOCLN 6x2				**19707/581 00**		
24.502 DF	02-90 / 12-90	**19495 00**		**19496 00**		
24.502 FNL	02-90 / 12-90	**19495 00**		**19496 00**		17238 00 auxiliary axle
25.224 MNLC / MNLLC	08-95 /			**19495 00**		19496 00 rear optional
25.264 MNLC / MNLL	08-95 /			**19495 00**		19496 00 rear optional
25.272 DF / DFS / DFLS / DFK	09-90 / 12-92	**19495 00**		**19496 00**		
25.272 FNL / FNLL	09-90 / 10-93	**19495 00**		**19496 00**		17238 00 auxiliary axle
25.302 DI DFS / DFLS / DFK	09-90 / 12-91	**19495 00**		**19496 00**		
25.302 FNL / FNLL	09-90 / 12-91	**19495 00**		**19496 00**		17238 00 auxiliary axle
25.302 FNLS / FVLS	09-90 / 12-91	**19495 00**		**19496 00**		17238 00 auxiliary axle
25.322 DF / DFS / DFLS / DFK	09-90 / 12-92	**19495 00**		**19496 00**		
25.322 FNL / FNLL	09-90 / 12-92	**19495 00**		**19496 00**		17238 00 auxiliary axle
25.322 FNLS / FVLS	09-90 / 12-92	**19495 00**		**19496 00**		17238 00 auxiliary axle
25.322 UNL / UNLL	09-90 / 12-92	**19495 00**		**19496 00**		
25.372 DF / DFS / DFLS / DFK	09-90 / 12-92	**19495 00**		**19496 00**		
25.372 FNLS / FVLS	09-90 / 10-93	**19495 00**		**19496 00**		17238 00 auxiliary axle
25.372 FVLS / FNL / FNLL	09-90 / 10-93	**19495 00**		**19496 00**		17238 00 auxiliary axle
25.372 UNL / UNLL	09-90 / 12-92	**19495 00**		**19496 00**		
25.422 DF / DFS / DFLS / DFK	09-90 / 12-92	**19495 00**		**19496 00**		
25.422 FNL / FNLL	09-90 / 12-92	**19495 00**		**19496 00**		17238 00 auxiliary axle

MODEL / *MODELO*	YEAR - *AÑO*	FRONT *DELANTERA*	SYSTEM *SISTEMA*	REAR *TRASERA*	SYSTEM *SISTEMA*	OBS.
MAN TRUCKS						
25.422 FNLS / FVLS	09-90 / 12-92	**19495 00**		**19496 00**		17238 00 auxiliary axle
25.422 UNL / UNLL	09-90 / 12-92	**19495 00**		**19496 00**		
25.502 DF / DFS	09-90 / 12-92	**19495 00**		**19496 00**		
25.502 FNL	09-90 / 12-92	**19495 00**		**19496 00**		17238 00 auxiliary axle
26.233 FVLCNG	09-96 /			**19496 00**		17238 00 auxiliary axle
26.242 DF / DFS / DFK	01-88 / 07-89			**19496 00**		
26.242 DFAK	02-89 / 07-89			**19496 00**		
26.262 DF / DFS / DFK	01-88 / 02-90			**19496 00**		
26.262 DFA / DFAS / DFAK	02-89 / 02-90			**19496 00**		
26.272 DF / DFS / DFLS / DFK	02-90 / 06-96			**19496 00**		
26.272 DFA / DFAS / DFAK	02-90 / 12-92			**19496 00**		
26.272 FNL / FNLL / FNLS / FVLS	09-90 / 95	**19495 00**		**19496 00**		17238 00 auxiliary axle
26.273 DFC / DFLC / DFS / DFLS	94 / 95			**19495 00**		
26.273 DFK / DFLK	94 / 95	**19495 00**		**19495 00**		
26.273 FNLC / FNLLC	94 / 95			**19496 00**		17238 00 auxiliary axle
26.273 FNLS / FVLS	94 / 95			**19496 00**		17238 00 auxiliary axle
26.292 DF / DFS / DFK	09-87 / 02-90			**19496 00**		
26.292 DFA / DFAS / DFAK	05-88 / 02-90			**19496 00**		
26.293 DFC / DFLC / DFS / DFLS	94 /			**19495 00**		
26.293 DFK / DFLK	94 /	**19495 00**		**19495 00**		
26.293 FNLC / FNLLC	94 /			**19496 00**		17238 00 auxiliary axle
26.293 FNLS / FVLS	94 /			**19496 00**		17238 00 auxiliary axle
26.302 DF / DFS / DFK	05-90 / 12-91			**19496 00**		
26.302 DFA / DFAS / DFAK	05-90 / 91			**19496 00**		
26.302 FNL / FNLL / FNLS / FVLS	09-90 / 91	**19495 00**		**19496 00**		17238 00 auxiliary axle
26.322 DF / DFS / DFLS / DFK	02-90 / 06-96			**19496 00**		
26.322 DFA / DFAS / DFAK	02-90 / 92			**19496 00**		
26.322 FNL / FNLL / FNLS / FVLS	09-90 / 95	**19495 00**		**19496 00**		17238 00 auxiliary axle
26.322 UNL	05-89 /	**19495 00**		**19496 00**		17238 00 auxiliary axle
26.322 UNL / 26.322 UNLL	09-90 / 05-94			**19496 00**		
26.323 DFC / DFLC / DFS / DFLS	94 / 95			**19495 00**		
26.323 DFK / DFLK	94 / 95	**19495 00**		**19495 00**		
26.323 FNLC. FNLLC	94 / 95			**19496 00**		17238 00 auxiliary axle
26.323 FNLS / FVLS	94 / 95			**19496 00**		17238 00 auxiliary axle
26.332 DF / DFS / DFK	09-87 / 02-90			**19496 00**		
26.332 DFA / DFAS / DFAK	05-88 / 02-90			**19496 00**		
26.342 DF / DFL / DFS / DFK / DFLK	04-94 / 06-96			**19496 00**		
26.343 DFC / DFLC / DFS / DFLS	94 /			**19495 00**		
26.343 DFK / DFLK	94 /	**19495 00**		**19495 00**		
26.343 FNLC / FNLLC	94 /			**19496 00**		17238 00 auxiliary axle
26.343 FNLS / FVLS	94 /			**19496 00**		17238 00 auxiliary axle
26.372 DF / DFS / DFK	01-89 / 94			**19496 00**		
26.372 DFA / DFAK / DFAS	01-89 / 94			**19496 00**		
26.372 DFN / FVL / FVLS / FNL / FN	01-89 / 94	**19495 00**		**19496 00**		17238 00 auxiliary axle
26.372 UNL	05-89 /	**19495 00**		**19496 00**		17238 00 auxiliary axle
26.373 DFC / DFLC / IDFS / DFLS	94 / 95			**19495 00**		
26.373 DFK / DFLK	94 / 95	**19495 00**		**19495 00**		
26.373 FNLC / FNLLC	94 / 95			**19496 00**		17238 00 auxiliary axle
26.373 FNLS / FVLS	94 / 95			**19496 00**		17238 00 auxiliary axle
26.403 DFC / DFLC / DFS / DFLS	94 /			**19495 00**		
26.403 DFK / DFLK	94 /	**19495 00**		**19495 00**		
26.403 FNLC / FNLLC	94 /			**19496 00**		17238 00 auxiliary axle
26.403 FNLS / FVLS	94 /			**19496 00**		17238 00 auxiliary axle
26.422 D / DFS / DFK	01-89 / 94			**19496 00**		

MODEL / *MODELO*	YEAR - *AÑO*	FRONT *DELANTERA*	SYSTEM *SISTEMA*	REAR *TRASERA*	SYSTEM *SISTEMA*	OBS.
MAN TRUCKS						
26.422 DFA / DFAK / DFAS	01-89 / 94			**19496 00**		
26.422 DFN / FVL / FVLS / FNL / FN	01-89 / 94	**19495 00**		**19496 00**		17238 00 auxiliary axle
26.422 UNL	05-89 /	**19495 00**		**19496 00**		17238 00 auxiliary axle
26.423 DFC / DFLC / DFS / DFLS	94 / 95			**19495 00**		
26.423 DFK / DFLK	94 / 95	**19495 00**		**19495 00**		
26.423 FNLC / FNLLC	94 / 95			**19496 00**		17238 00 auxiliary axle
26.423 FNLS / FVLS	94 / 95			**19496 00**		17238 00 auxiliary axle
26.463 DFC / DFLC / DFS / DFLS	94 /			**19495 00**		
26.463 DFK / DFLK	94 /	**19495 00**		**19495 00**		
26.463 FNLC / FNLLC	94 /			**19496 00**		17238 00 auxiliary axle
26.463 FNLS / FVLS	94 /			**19496 00**		17238 00 auxiliary axle
26.502 DF / DFS	01-89 /			**19496 00**		
26.502 DFA / DFAS	01-89 /			**19496 00**		
26.502 FNL	01-89 /	**19495 00**		**19496 00**		17238 00 auxiliary axle
26.603 DFC / DFLC / DFS / DFLS	06-96 /			**19495 00**		
26.603 DFK / DFLK	06-96 /	**19495 00**		**19495 00**		
27.273 DFAC / DFAS / DFAK	94 / 95	**19495 00**		**19495 00**		
27.273 DFC / DFS	94 / 95			**19495 00**		
27.273 DFK	94 /	**19495 00**		**19495 00**		
27.293 DFAC / DFAS / DFAK	94 /	**19495 00**		**19495 00**		
27.293 DFC / DFS	94 /			**19495 00**		
27.323 DFC / DFS	94 / 95			**19495 00**		
27.323 DFK / DFAC / DFAS / DFAK	94 / 95	**19495 00**		**19495 00**		
27.343 DFC / DFS	94 /			**19495 00**		
27.343 DFK / DFAC / DFAS / DFAK	94 /	**19495 00**		**19495 00**		
27.373 DFC / DFS	94 / 95			**19495 00**		
27.373 DFK / DFAK	94 / 95	**19495 00**		**19495 00**		
27.403 DFC / DFS	94 /			**19495 00**		
27.403 DFK / DFAC / DFAS / DFAK	94 /	**19495 00**		**19495 00**		
27.423 DFC / DFS	94 / 95			**19495 00**		
27.423 DFK / DFAC / DFAS / DFAK	94 / 95	**19495 00**		**19495 00**		
27.463 DFC / DFS	94 /			**19495 00**		
27.463 DFK / DFAC / DFAS / DFAK	94 /	**19495 00**		**19495 00**		
27.502 DF / DFS	01-89 /			**19496 00**		
27.502 DFA / DFAS	01-89 /			**19496 00**		
27.603 DFC / DFS	01-96 /			**19495 00**		
30.292 215 / 292 88-94						
30.332 VFNL 8x2	88 / 94	**19495 00**		**19495 00**		19495 00 2nd front and rear axle
30.332 VFNL 8x2	88 / 94	**19495 00**		**19496 00**		19496 00 2nd front and rear axle
32.272 VF / VFK	89 / 94	**19495 00**		**19496 00**		
32.292 VFNL 8x2	88 / 94	**19495 00**		**19496 00**		19495 00 2nd front axle 19496 00 2nd rear axle
32.293 VFC	08-95 /	**19495 00**		**19495 00**		
32.322 VF / VFK	89 / 94	**19495 00**		**19496 00**		
32.332 VFNL 8x2	88 / 94	**19495 00**		**19496 00**		19495 00 2nd front axle 19496 00 2nd rear axle
32.343 VFC / VFK	08-95 /	**19495 00**		**19495 00**		
32.362 VFNL 8x2	88 / 94	**19495 00**		**19496 00**		19495 00 2nd front axle 19496 00 2nd rear axle
32.372 VF / VFK	89 / 94	**19495 00**		**19496 00**		
32.403 VFC / VFK	08-95 /	**19495 00**		**19495 00**		
32.422 VF / VFK	89 / 94	**19495 00**		**19496 00**		
32.463 VFC / VFK	08-95 /	**19495 00**		**19495 00**		
33.262 DF / DFK / DFS	89 / 94	**19495 00**		**19496 00**		
33.262 DFA / DFAK / DFAS	89 / 94			**19496 00**		

MODEL / *MODELO*	YEAR - *AÑO*	FRONT *DELANTERA*	SYSTEM *SISTEMA*	REAR *TRASERA*	SYSTEM *SISTEMA*	OBS.
MAN TRUCKS						
33.272 DF / DFK / DFS	89 / 94	**19495 00**		**19496 00**		
33.272 DFA / DFAK / DFAS	89 / 94			**19496 00**		
33.292 DF / DFK / DFS	89 / 94	**19495 00**		**19496 00**		
33.292 DFA / DFAK / DFAS	89 / 94			**19496 00**		
33.320 DF / DA	77 / 88			**19495 00**		19495 00 2nd rear axle
33.320 DF / DA	77 / 88			**19496 00**		19496 00 2nd rear axle
33.322 DF / DFK / DFS	89 / 94	**19495 00**		**19496 00**		
33.322 DFA / DFAK / DFAS	89 / 94			**19496 00**		
33.323 DFAC / DFAS / DFAK	94 / 95	**19495 00**		**19495 00**		
33.323 DFC / DFS / DFK	94 / 95			**19495 00**		
33.332 DF / DFK / DFS	89 / 94	**19495 00**		**19496 00**		
33.332 DFA / DFAK / DFAS	89 / 94			**19496 00**		
33.343 DFAC / DFAS / DFAK	94 /	**19495 00**		**19495 00**		
33.343 DFC / DFS / DFK	94 /			**19495 00**		
33.362 DF / DFK / DFS	89 / 94	**19495 00**		**19496 00**		
33.362 DFA / DFAK / DFAS	89 / 94			**19496 00**		
33.372 DF / DFK / DFS	89 / 94	**19495 00**		**19496 00**		
33.372 DFA / DFAK / DFAS	89 / 94			**19496 00**		
33.373 DFAC / DFAS / DFAK	94 / 95	**19495 00**		**19495 00**		
33.373 DFC / DFS / DFK	94 / 95			**19495 00**		
33.403 DFAC / DFAS / DFAK	94 /	**19495 00**		**19495 00**		
33.403 DFC / DFS / DFK	94 /			**19495 00**		
33.422 DF / DFK / DFS	89 / 94	**19495 00**		**19496 00**		
33.422 DFA / DFAK / DFAS	89 / 94			**19496 00**		
33.423 DFAC / DFAS / DFAK	94 / 95	**19495 00**		**19495 00**		
33.423 DFC / DFS / DFK	94 / 95			**19495 00**		
33.462 DF / DFS	89 / 94	**19495 00**		**19496 00**		
33.462 DFA / DFAS	89 / 94			**19496 00**		
33.463 DFAC / DFAS / DFAK	94 /	**19495 00**		**19495 00**		
33.463 DFC / DFS / DFK	94 /			**19495 00**		
33.502 DF / DFS	89 /	**19495 00**		**19496 00**		17238 00 auxiliary axle
33.502 DFA / DFAS	89 /			**19496 00**		
33.603 DFAC / DFAS	01-96 /	**19495 00**		**19495 00**		
33.603 DFC / DFS	01-96 /			**19495 00**		
35.262 VF	89 / 94	**19495 00**		**19496 00**		
35.262 VFAK	89 / 94			**19496 00**		
35.272 VF / VFK	89 / 94	**19495 00**		**19496 00**		
35.272 VFAK	89 / 94			**19496 00**		
35.292 VF	89 / 94	**19495 00**		**19496 00**		
35.292 VFAK	89 / 94			**19496 00**		
35.322 VF / VFK	89 / 94	**19495 00**		**19496 00**		
35.322 VFA / VFAK	89 / 94			**19496 00**		
35.332 VF	89 / 94	**19495 00**		**19496 00**		
35.332 VFAK	89 / 94			**19496 00**		
35.343 VFC / VFK	08-95 /	**19495 00**		**19496 00**		
35.362 VF	89 / 94	**19495 00**		**19496 00**		
35.362 VFAK	89 / 94			**19496 00**		
35.372 VF / VFK	89 / 94	**19495 00**		**19496 00**		
35.372 VFA / VFAK	89 / 94			**19496 00**		
35.403 VFC / VFK	08-95 /	**19495 00**		**19496 00**		
35.422 VF / VFK	89 / 94	**19495 00**		**19496 00**		
35.422 VFA / VFAK	89 / 94			**19496 00**		
35.463 VFC / VFK	08-95 /	**19495 00**		**19496 00**		
38.320 DFAS / DFAK / DFS / DFK / DF / DA	75 / 88			**19495 00**		

MODEL / *MODELO*	YEAR - *AÑO*	FRONT *DELANTERA*	SYSTEM *SISTEMA*	REAR *TRASERA*	SYSTEM *SISTEMA*	OBS.
MAN TRUCKS						
40.372 DFAK / DFAS	89 / 94			**19496 00**		
40.372 DFS / DFK	89 / 94	**19495 00**		**19496 00**		
40.403 DFAK / DFAS / DFK	94 /	**19495 00**		**19495 00**		
40.403 DFS	94 /			**19495 00**		
40.422 DFAK / DFAS	89 / 94			**19496 00**		
40.422 DFS / DFK	89 / 94	**19495 00**		**19496 00**		
40.462 DFAK / DFAS	89 / 94			**19496 00**		
40.463 DFAK / DFAS / DFK	94 /	**19495 00**		**19495 00**		
40.463 DFS	94 /			**19495 00**		
40.502 (6x6)	89 /			**19495 00**		19496 00 rear optional 19495 00 2nd rear axle
40.502 (8x8)	89 /			**19495 00**		19496 00 rear optional 19495 00 2nd rear axle
41.262 VF / VFK	89 / 94	**19495 00**		**19496 00**		
41.262 VFAK	89 / 94			**19496 00**		
41.292 VF / VFK	89 / 94	**19495 00**		**19496 00**		
41.292 VFAK	89 / 94			**19496 00**		
41.322 VF / VFK	89 / 94	**19495 00**		**19496 00**		
41.322 VFAK	89 / 94			**19496 00**		
41.332 VF / VFK	89 / 94	**19495 00**		**19496 00**		
41.332 VFAK	89 / 94			**19496 00**		
41.343 VFC / VFK	08-95 /	**19495 00**		**19496 00**		
41.362 VF / VFK	89 / 94	**19495 00**		**19496 00**		
41.362 VFAK	89 / 94			**19496 00**		
41.372 VF / VFK	89 / 94	**19495 00**		**19496 00**		
41.372 VFAK	89 / 94			**19496 00**		
41.403 VFC / VFK	08-95 /	**19495 00**		**19496 00**		
41.422 VF / VFK	89 / 94	**19495 00**		**19496 00**		
41.422 VFAK	89 / 94			**19496 00**		
41.463 VFC / VFK	08-95 /	**19495 00**		**19496 00**		
48.292 VFA / VFAK	89 / 94			**19496 00**		
48.322 VF	89 / 94	**19495 00**		**19496 00**		
48.322 VFA / VFAK	89 / 94			**19496 00**		
48.332 VFA / VFAK	89 / 94			**19496 00**		
48.343 VF / VFA	94 /	**19495 00**		**19496 00**		
48.362 VFA / VFAK	89 / 94			**19496 00**		
48.372 VF	89 / 94	**19495 00**		**19496 00**		
48.372 VFA / VFAK	89 / 94			**19496 00**		
48.403 VF / VFA	94 /	**19495 00**		**19496 00**		
48.422 VF	89 / 94	**19495 00**		**19496 00**		
48.422 VFA / VFAK	89 / 94			**19496 00**		
48.462 VFA / VFAK	89 / 94			**19496 00**		
48.463 VF / VFA	94 /	**19495 00**		**19496 00**		
48.502 VF	89 /	**19495 00**		**19496 00**		
48.502 VFA / VFAK	89 /			**19496 00**		
6.90 E / FK	78 / 88	**15817/823 00**		**15817/823 00**		Perrot brakes
8.136 FAE	12-83 / 08-88	**17017 00**		**17017 00**		
9.136 FAE	12-83 / 08-88	**17017 00**		**17017 00**		
FR 292 4x2	05-85 / 01-93			**19707/581 00**		
FRH 292 4x2	05-85 / 01-93			**19707/581 00**		
FRH 362 4x2	05-85 / 12-92			**19707/581 00**		
HELICON -380 6X2	01-87 /			**19707/581 00**		
NG 262	06-97 / 07-98			**19707/581 00**		
NG 272	08-92 / 07-98			**19707/581 00**		
NG 312	09-95 / 07-98			**19707/581 00**		

MODEL / *MODELO*	YEAR - *AÑO*	FRONT *DELANTERA*	SYSTEM *SISTEMA*	REAR *TRASERA*	SYSTEM *SISTEMA*	OBS.
MAN TRUCKS						
NL 202 4x2	09-89 / 04-94			**19707/581 00**		
NL 243 4x2	09-88 /			**19707/581 00**		
NL 262 / NL 263 4x2	04-91 /			**19707/581 00**		
NL 273 4x2	09-88 /			**19707/581 00**		
R 292 4x2	05-85 / 01-93			**19707/581 00**		
SD 202 4x2	10-85 / 04-94			**19707/581 00**		
SG 240 6x2	09-85 / 04-94			**19707/581 00**		
SG 240 H 6x2	11-84 / 09-89			**19707/581 00**		
SG 242 6x2	09-85 / 04-94			**19707/581 00**		
SG 242 H	11-84 / 09-89			**19707/581 00**		
SG 280	01-84 / 12-94			**19707/581 00**		
SG 282	01-84 / 12-94			**19707/581 00**		
SG 292	01-84 / 12-94			**19707/581 00**		
SG 292 H	01-84 / 12-94			**19707/581 00**		
SG 312 6x2	02-94 / 06-97			**19707/581 00**		
SG 322	02-94 / 06-97			**19707/581 00**		
SL 200	01-84 / 12-94			**19707/581 00**		
SL 202 4x2	06-84 / 04-93			**19707/581 00**		
SL 283 4x2	04-84 / 05-96			**19707/581 00**		
SL 353 4x2	04-84 / 05-96			**19707/581 00**		
SL 363 4x2	04-84 / 05-96			**19707/581 00**		
SR 240	01-86 /			**19707/581 00**		
SR 280	01-86 /			**19707/581 00**		
SÜ 240 4x2	01-86 / 09-89			**19707/581 00**		
SÜ 242 4x2	01-87 / 04-93			**19707/581 00**		
SÜ 272 4x2	04-93 / 05-95			**19707/581 00**		
SÜ 292 4x2	04-92 / 04-93			**19707/581 00**		
SÜ 322 4x2	05-95 / 06-97			**19707/581 00**		
ÜL 242 4x2	09-89 / 03-93			**19707/581 00**		
ÜL 272 4x2	03-93 /			**19707/581 00**		
ÜL 292 4x2	09-89 / 03-93			**19707/581 00**		
MARCOPOLO						
VOLARE A5	98 /	**PD/102**	Varga	**FD/72**	Bendix	
VOLARE A6	98 /	**PD/102**	Varga	**FD/72**	Bendix	
VOLARE A8	00 /	**FD/77**	Master	**FD/77**	Master	
VOLARE A8	00 /	**FD/77**	Bendix	**FD/77**	Bendix	
VOLARE W7	14 /	**FD/59**	Master	**FD/59**	Master	Freio HD
VOLARE W8	02 /	**FD/77**	Master	**FD/77**	Master	
VOLARE W8	02 /	**FD/59**	Master	**FD/59**	Master	Freio HD
VOLARE W9	02 /	**FD/59**	Master	**FD/59**	Master	Freio HD
VOLARE W12	09 /	**FD/88**	Master	**FD/88**	Master	
MARINGÁ						
3° EIXO	/ 78			**4195-A**		
3° EIXO	79 /			**4514-F** **4514-G**	Bendix	
CARRETA	84 /			**CA/32**	Master	
MASSARI						
CARRETA	/ 78			**4515**		
CARRETA	78 /			**CA/32**	Master	
MASSEY-FERGUSON						
MF-50 X (Agrícola)				**TR/311**		487 497 M1

MODEL / *MODELO*	YEAR - *AÑO*	FRONT *DELANTERA*	SYSTEM *SISTEMA*	REAR *TRASERA*	SYSTEM *SISTEMA*	OBS.
MAZDA						
2	11 /	**PD/1097**				
3 2.0L	06 / 09	**PD/767**		**PD/796**		
3 2.0L	06 /	**PD/767**		**PD/1061**		
3 HATCHBACK	04 / 07	**PD/767**				
3 SPEED	07 / 09	**PD/767**				
5	06 / 09	**PD/767**		**PD/796**		
6	08 / 09	**PD/647**		**PD/646**		
6 2.5L / 3.7L	07 / 08	**PD/816**		**PD/646**		
121 1.1 / 1.3	/ 95	**PD/376**	Sumitomo			
121 1.2 / 1.3	96 /	**PD/65**	Teves			
121 1.8 D	96 /	**PD/55**	Teves			
323 1.3 / 1.3i / 1.5	/ 98	**PD/376**	Sumitomo			
323 1.6 / 1.6i	/ 96	**PD/376**	Sumitomo			
323 1.7D GLX	/ 95	**PD/376**	Sumitomo			
323 1.8i 16V	/ 96	**PD/376**	Sumitomo			
323 2.0	96 / 98	**PD/376**	Sumitomo			
626	00 / 02	**PD/1049**				
626 2.0L	94 / 02	**PD/610**				
626 1.6 LX	/ 95	**PD/333**	Akebono			
626 1.8 GLX / LX	/ 95	**PD/333**	Akebono			
626 2.0 LX	/ 95	**PD/333**	Akebono			
626 2.2i	/ 95	**PD/333**	Akebono			
929	88 / 91	**PD/1002**				
B 2300	95 / 97	**PD/332**	Bendix			
B 2300	94 /	**PD/374**				
B 2300	03 / 05	**PD/365**	Bosch			
B 2500	99 /	**PD/332**	Bendix			
B 2500	04 /	**PD/1027**				
B 3000	98 /	**PD/332**	Bendix			
B 3000	94 /	**PD/374**				
B 3000	03 / 05	**PD/365**	Bosch			
B 4000	03 / 05	**PD/365**	Bosch			
B 4000	98 /	**PD/332**	Bendix			
B 4000	94 /	**PD/374**				
CX-5		**PD/1419**		**PD/1420**		
CX-7 2.3L	07 / 09	**PD/1080**		**PD/1081**		
CX-7 MZR DISI TURBO 2.3	10-07 /	**PD/1080**	ADVICS	**PD/1081**	Akebono	
CX-9 3.5L / 3.7L	07 / 09	**PD/1080**		**PD/1081**		
E 2000 Bus / Van 2.2 D	02-97 /	**PD/538**	Sumitomo			
E 2200 Bus/Van 2.2 D	02-97 /	**PD/538**	Sumitomo			
MIATA 1.8	94 /	**PD/415**	Lockheed			
MILLENIA	95 / 02	**PD/785**				
MPV	94 / 01	**PD/781**				
MPV 4X4	92 / 93	**PD/781**				
MPV I 2.6 i 12v 2WD	01-92 / 05-96	**PD/538**	Sumitomo			
MPV I (LV) 2.5 TD 2WD	05-96 / 09-99	**PD/538**	Sumitomo			
MPV I (LV) 3.0i V6 2WD	05-96 / 09-99	**PD/538**	Sumitomo			
MX3	93 /	**PD/376**	Sumitomo			
MX3 1.6i 16V	91 /	**PD/132**	Sumitomo	**PD/344**	Akebono	
MX3 1.8i 16V	91 /	**PD/132**	Sumitomo	**PD/344**	Akebono	
MX3 COUPE	91 /	**PD/376**	Sumitomo			
MX5 1.8	92 /	**PD/415**	Lockheed			
PROTEGE	99 /	**PD/787**				
PROTEGE	99 /	**PD/798**				

MODEL / *MODELO*	YEAR - *AÑO*	FRONT *DELANTERA*	SYSTEM *SISTEMA*	REAR *TRASERA*	SYSTEM *SISTEMA*	OBS.
MAZDA						
PROTEGE	99 / 00	**PD/610**				
RX-7	86 /			**PD/1131**		
TRIBUTE	01 /	**PD/530**	Teves			
MERCEDES-BENZ						
190 E 16V	86 / 87	**PD/1159**				
260 E	87 / 89	**PD/1159**				
300 CD	88 / 89	**PD/1159**				
300 D	87	**PD/1159**				
300 E	86 / 89	**PD/1159**				
300 TD	87	**PD/1159**				
300 TE	88 / 89	**PD/1159**				
317-H		**9202**		**9202**		
321-H	/ 64	**MB/164**		**MB/161**		
508 Van Ecovan	91 /	**PD/104 PD/104-A**	Varga	**MB/193**		
609 D	91 /	**PD/104 PD/104-A**	Varga	**MB/193**		
709 D	91 /	**PD/104 PD/104-A**	Varga	**MB/193**		
710 Plus	02 /	**PD/104**	Varga	**FD/77**	Master	
709	88 / 96	**PD/104 PD/104-A**	Varga	**MB/193**		
710	90 /	**PD/104 PD/104-A**	Varga	**MB/193**		
710	96 /	**PD/104**	Varga	**MB/193**	MB	
712	92 / 94	**PD/104 PD/104-A**	Varga	**MB/193**		
712	98 /	**PD/117 PD/117-A**	Wabco	**PD/117 PD/117-A**	Wabco	Eletrônico
712		**PD/104**		**PD/104**		
812	98 /	**PD/117 PD/117-A**	Wabco	**PD/117 PD/117-A**	Wabco	Eletrônico
814	98 /	**PD/117 PD/117-A**	Wabco	**PD/117 PD/117-A**	Wabco	Eletrônico
912	88 / 96	**PD/104**	Varga	**MB/193**	MB	
914	95 / 98	**PD/104 PD/104-A**	Varga	**MB/193**	MB	
914	94 / 95	**PD/104**				
914-C	98 /	**PD/117 PD/117-A**	Wabco Perrot	**PD/117 PD/117-A**	Wabco Perrot	Eletrônico
1114 6x2	95 / 97	**PD/104**	Varga	**MB/193**	MB	3° eixo MB/193
1214	91 / 97	**MB/182**	MB	**MB/182**	MB	
1214	00 /	**PD/104**	Varga	**FD/77**	Master	
1214-C	97 /	**MB/183**	MB	**MB/183**	MB	
1215	99 /	**MB/183**	MB	**MB/183**	MB	Freno a aire
1215-C	99 /	**MB/183 PD/116-K**	MB Knorr	**MB/183 PD/116-K**	MB Knorr	
1218	91 / 97	**MB/182**	MB	**MB/182**	MB	
1318 Ônibus	03 /	**MB/183**	MB	**MB/183 MB/184**	MB	Eixo HL4 Eixo HL5
1414	91 / 96	**MB/183**	MB	**MB/183**	MB	Freno a aire
1418	91 /	**MB/183**	MB	**MB/183**	MB	
1418	91 /	**MB/183**	MB	**MB/184**	MB	Eixo HL5
1418-K	91 /	**MB/183**		**MB/184**		Freno a aire
1420	02 /	**MB/183**	MB	**MB/183**	MB	
1620 6x2	00 /	**MB/184**	MB	**MB/184**	MB	3° eixo MB/184
1715	93 /	**MB/184**	MB	**MB/184**	MB	
1718	91 /	**MB/184**	MB	**MB/184**	MB	

MODEL / *MODELO*	YEAR - *AÑO*	FRONT *DELANTERA*	SYSTEM *SISTEMA*	REAR *TRASERA*	SYSTEM *SISTEMA*	OBS.
MERCEDES-BENZ						
1718-A	98 /	**MB/183**	MB	**MB/184**	MB	
1718-K	91 / 93	**MB/184**		**MB/184**		Freno a aire
1718-M	97 /	**MB/184**	MB	**MB/184**	MB	
1720	97 /	**MB/184**	MB	**MB/184**	MB	
1720 6x2	00 /	**MB/184**	MB	**MB/184**	MB	3° eixo MB/184
1720 K	00 /	**MB/184**	MB	**MB/184**	MB	
1721	92 / 98	**MB/184**	MB	**MB/184**	MB	
1721 S	92 / 98	**MB/184**	MB	**MB/184**	MB	
1723	98 /	**MB/184**	MB	**MB/184**	MB	
1726-E	08 /	**PD/116-K**	Knorr	**PD/116-K**	Knorr	
1938-S	99 /	**PD/116-K**	Knorr	**PD/116-K**	Knorr	Eletrônico
1944-S	03 /	**PD/116-K**	Knorr	**PD/116-K**	Knorr	
2038	97 / 98	**MB/184**	MB	**MB/188**	MB	Importado
2240	97 / 98	**MB/184**	MB	**MB/188**	MB	Importado
2414	92 /	**MB/183**	MB	**MB/183**	MB	3° eixo **MB/183**
2418	92 / 99	**MB/183**	MB	**MB/183**	MB	3° eixo **MB/183**
2423 B	98 /	**MB/184**	MB	**MB/184**	MB	3° eixo **MB/184**
2423 K	98 /	**MB/184**	MB	**MB/184**	MB	3° eixo **MB/184**
2428	00 /	**MB/184**	MB	**MB/184**	MB	3° eixo **MB/184**
2544		**MB/185**		**MB/188**		
A200 (W 169) 2.0	04 /	**PD/1476**	Bosch			
ACCELO 715-C	03 /	**PD/104**	Varga	**PD/104**	Varga	
ACCELO 815	12 /	**FD/59**		**FD/59**		
ACCELO 915-C	03 / 06-04	**PD/526**	Knorr	**PD/526**	Knorr	
ACCELO 915-C	07-04 /	**PD/533**	Knorr	**PD/533**	Knorr	
ACCELO 915-C	03 / 06-04	**PD/526**	Knorr	**PD/526**	Knorr	Freio SB 5000
ACCELO 915-C	07-04 /	**PD/533**	Knorr	**PD/533**	Knorr	Freio SN 5000
ACCELO 1016		**PD/526**		**FD/59**	MB	
ACTROS	96 / 10	**PD/116-K**	Knorr	**PD/116-K**	Knorr	
ACTROS	96 / 09-10	**PD/116-K**	Knorr	**PD/116-K**	Knorr	
ACTROS	10-10 /	**PD/205**	Knorr	**PD/206**	Knorr	
ACTROS (2 axles) - 18 / 20 ton SERIES	96 / 10	**PD/116**	Knorr	**PD/116**	Knorr	
ACTROS (3 axles) - 25 / 26 / 33 ton SERIES	96 / 10	**PD/116**	Knorr	**PD/116**	Knorr	
ACTROS MP4 1842 L	07-11 /	**PD/205**	Knorr	**PD/206**	Knorr	
ACTROS MP4 1842 LS	10-10 /	**PD/205**	Knorr	**PD/206**	Knorr	
ACTROS MP4 1845 L / LS	07-11 /	**PD/205**	Knorr	**PD/206**	Knorr	
ACTROS MP4 1848 L / LS	07-11 /	**PD/205**	Knorr	**PD/206**	Knorr	
ACTROS MP4 1851 L / LS	07-11 /	**PD/205**	Knorr	**PD/206**	Knorr	
ACTROS MP4 2542 L	07-11 /	**PD/205**	Knorr	**PD/206**	Knorr	
ACTROS MP4 2545 L	07-11 /	**PD/205**	Knorr	**PD/206**	Knorr	
ACTROS MP4 2548 L	07-11 /	**PD/205**	Knorr	**PD/206**	Knorr	
ACTROS MP4 2651 L	07-11 /	**PD/205**	Knorr	**PD/206**	Knorr	
ATEGO 7 / 8 / 9 / 10 ton SERIES	98 /	**PD/526**	Knorr	**PD/526**	Knorr	
ATEGO 7 / 8 / 9 / 10 ton SERIES	98 /	**PD/533**	Knorr	**PD/533**	Knorr	
ATEGO 12 / 13 / 15 ton SERIES	98 /	**PD/120**	Knorr	**PD/120**	Knorr	
ATEGO 18 / 25 / 26 ton SERIES	98 /	**PD/116**	Knorr	**PD/116**	Knorr	
ATEGO 1315	04 /	**MB/184**	MB	**MB/184**	MB	
ATEGO 1418	04 /	**MB/184**	MB	**MB/184**	MB	
ATEGO 1518	04 /	**MB/184**	MB	**MB/184**	MB	
ATEGO 1718	04 /	**MB/184**	MB	**MB/184**	MB	
ATEGO 1725	04 /	**MB/184**	MB	**MB/184**	MB	
ATEGO 2425	04 /	**MB/184**	MB	**MB/184**	MB	
ATEGO 2726	04 /	**MB/184**	MB	**MB/184**	MB	
ATRON 1319	12 /	**MB/183**		**MB/184**		

MODEL / *MODELO*	YEAR - *AÑO*	FRONT *DELANTERA*	SYSTEM *SISTEMA*	REAR *TRASERA*	SYSTEM *SISTEMA*	OBS.
MERCEDES-BENZ						
ATRON 1635	12 /	**MB/184**		**MB/185**		
ATRON 1719 Basculante	12 /	**MB/184**		**MB/184**		
ATRON 1719 Bebida	12 /	**MB/184**		**MB/184**		
ATRON 1719 Plataforma	12 /	**MB/184**		**MB/184**		
ATRON 2324	12 /	**MB/184**		**MB/184**		
ATRON 2726	12 /	**MB/184**		**MB/184**		
ATRON 2729 Basculante	12 /	**MB/184**		**MB/184**		
ATRON 2729 Betoneira	12 /	**MB/184**		**MB/184**		
ATRON 2729 Plataforma	12 /	**MB/184**		**MB/184**		
AXOR - 18 ton SERIES	02 /	**PD/116**	Knorr	**PD/116**	Knorr	
AXOR 1933	05 /	**PD/116-K**	Knorr	**PD/116-K**	Knorr	
AXOR 2035	05 /	**PD/116-K**	Knorr	**PD/116-K**	Knorr	
AXOR 2040	05 /	**PD/116-K**	Knorr	**PD/116-K**	Knorr	
AXOR 2533 6x2	05 /	**PD/116-K**	Knorr	**PD/116-K**	Knorr	
AXOR 2540 6x2	05 /	**PD/116-K**	Knorr	**PD/116-K**	Knorr	
AXOR 2544 6x2	05 /	**PD/116-K**	Knorr	**PD/116-K**	Knorr	
AXOR 2640 6x4	05 /	**PD/116-K**	Knorr	**PD/116-K**	Knorr	
AXOR 2644 6x4	05 /	**PD/116-K**	Knorr	**PD/116-K**	Knorr	
AXOR 2826 6x4	06 /	**MB/185**	MB	**MB/188**	MB	3º eixo **MB/188**
AXOR 2831 6x4	06 /	**MB/185**	MB	**MB/188**	MB	3º eixo **MB/188**
AXOR 3340 6x4	05 /	**MB/185**	MB	**MB/188**	MB	3º eixo **MB/188**
AXOR 3344 6x4	05 /	**MB/185**	MB	**MB/188**	MB	3º eixo **MB/188**
AXOR 4140 6x4	06 /	**MB/185**	MB	**MB/188**	MB	3º eixo **MB/188**
AXOR 4144 6x4	06 /	**MB/185**	MB	**MB/188**	MB	3º eixo **MB/188**
C-180 1.8 T (T202)	96 /	**PD/489**	Girling			
C-180 1.8i 16V CLASSIC	93 / 00	**PD/489**	Girling			
C-180 1.8i 16V ELEGANCE	93 / 00	**PD/489**	Girling			
C-180 1.8i 16V SPORT (W202)	93 / 00	**PD/489**	Girling			
C-200	01 / 04	**PD/1043**				
C-200 2.0 D	93 / 00	**PD/489**	Girling			
C-200 2.0 ELEGANCE	93 / 00	**PD/489**	Girling			
C-200 2.0 SPORT (W202)	93 / 00	**PD/489**	Girling			
C-200 2.0 T	96 / 01	**PD/489**	Girling			
C-200 2.0 TD (T202)	96 / 01	**PD/489**	Girling			
C-200 2.0i 16V CLASSIC	93 / 00	**PD/489**	Girling			
C-200 2.0i 16V ELEGANCE	93 / 00	**PD/489**	Girling			
C-200 2.0i 16V SPORT (W202)	93 / 00	**PD/489**	Girling			
C-200 CDI (W202)	98 / 00	**PD/489**	Girling			
C-220	96 / 97	**PD/489**		**PD/1046**		
C-220 2.2 D (W202)	93 / 95	**PD/489**	Girling			
C-220 2.2 TD CDI (T202)	96 /	**PD/489**	Girling			
C-220 2.2i 16V CLASSIC	93 / 00	**PD/489**	Girling			
C-220 2.2i 16V ELEGANCE	93 / 00	**PD/489**	Girling			
C-220 2.2i 16V SPORT (W202)	93 / 00	**PD/489**	Girling			
C-220 CLASIC Y ELEGANCE 2.2L	95 /	**PD/489**				
C-230	96 / 98	**PD/489**		**PD/1046**		
C-230	04 /	**PD/1011**		**PD/1050**		
C-230 2.2 (T202)	96 /	**PD/489**	Girling			
C-240	01 / 02	**PD/1011**		**PD/1050**		
C-240 2.4 T (T202)	97 / 00	**PD/489**	Girling			
C-250 2.5 TD (W202)	93 / 95	**PD/489**	Girling			
C-280	98 / 00	**PD/1043**		**PD/1050**		
C-280	06 / 07	**PD/1011**				
C-280 2.8 (W202)	93 / 97	**PD/489**	Girling			

MODEL / *MODELO*	YEAR - *AÑO*	FRONT *DELANTERA*	SYSTEM *SISTEMA*	REAR *TRASERA*	SYSTEM *SISTEMA*	OBS.
MERCEDES-BENZ						
C-280 T (T202)	97 / 01	**PD/489**	Girling			
C-320	01 / 05	**PD/1011**				
C-32MG	02 / 03	**PD/1009**				
C-350	06 / 07	**PD/1011**				
C-350 SPORT	06 / 07	**PD/1022**				
C-55 AMG	05 / 07	**PD/1009**				
CITARO (O 530)	98 /	**PD/116**	Knorr	**PD/116**	Knorr	
CITO (O 520)	98 /	**PD/116**	Knorr	**PD/116**	Knorr	
CL-500	01 / 05	**PD/1009**		**PD/1010**		
CL-500	08 / 09	**PD/1009**				
CL55 AMG	03	**PD/1016**				
CL-600	02 / 03	**PD/1009**		**PD/1010**		
CL65 AMG	05 / 06	**PD/1016**				
CLASS-A A 140 (168.131)	07-97 /- 08/04	**PD/1339**				
CLASS-A A 140 (168.131)	01-01 /- 08/04	**PD/1339**				
CLASS-A A 160 (168.033)	07-97 /- 08/04	**PD/1339**				
CLASS-A A 160 (168.033, 168.133)	07-97 /- 08/04	**PD/1339**				
CLASS-A A 160 (168.133)	01-01 /- 08/04	**PD/1339**				
CLASS-A A 170 CDI (168.008)	07-98 /- 02/01	**PD/1339**				
CLASS-A A 170 CDI (168.009)	02-01 /- 08/04	**PD/1339**				
CLASS-A A 170 CDI (168.009, 168.109)	02-01 /- 08/04	**PD/1339**				
CLASS-A A 170 CDI (168.109)	02-01 /- 08/04	**PD/1339**				
CLASS-A A 190 (168.032, 168.132)	03-99 /- 08/04	**PD/1339**				
CLASS-A A 210 (168.035, 168.135)	03-02 /- 08/04	**PD/1339**				
CLASE A	00 / 06	**PD/67-A**				
CLASE A	01 / 06	**PD/67-A**				
CLASSE A 160	99 /	**PD/67** **PD/67-A**	Girling	**MB/169-CPA**	Girling	
CLASSE A 190	00 /	**PD/67** **PD/67-A**	Girling	**MB/169-CPA**	Girling	
CLASSE A 200	13 /	**PD/1344**	Bosch	**PD/1333**	Lucas	
CLASSE B 150	03 /			**PD/1333**	Lucas	
CLASSE B 170 1.7	05 /	**PD/1476**	Bosch			
CLASSE B 180 Cdi	03 /	**PD/1344**	Bosch	**PD/1333**	Lucas	
CLASSE B 200	03 /	**PD/1344**	Bosch	**PD/1333**	Lucas	
CLASSE B 200 Cdi	03 /	**PD/1344**	Bosch	**PD/1333**	Lucas	
CLASSE B 200 TURBO	03 /	**PD/1344**	Bosch	**PD/1333**	Lucas	
CLASSE C (W204) C 230	07 /	**PD/1455**				
CLASSE C (W204) C 350	07 /	**PD/1455**				
CLASSE C C43 AMG SPORT	97 / 01	**PD/1472**				
CLASSE E (W211) E200	02 /	**PD/1475**	Bosch			
CLASSE E (W211) E220	02 /	**PD/1475**	Bosch			
CLASSE S (W/220) S 500	03 /	**PD/1474**	Brembo			
CLK COUPE/CABRIO 55 AMG	96 / 97	**PD/1472**				
CLK-320	04 / 05	**PD/1011**				
CLK-320	98 / 99			**PD/1013**		
CLK-320	00			**PD/1013**		
CLK-350	06 / 09	**PD/1011**				
CLK-500	03 / 04	**PD/1009**				
CLS55 AMG PERFORMANCE	06	**PD/1016**				
E50 AMG	96 / 97	**PD/1472**				
E55 AMG 4-MATIC	97 / 02	**PD/1472**				
E-200 2.0i 16V (W124)	93 / 95	**PD/489**	Girling			
E-320	96 / 02			**PD/1013**		

MODEL / *MODELO*	YEAR - *AÑO*	FRONT *DELANTERA*	SYSTEM *SISTEMA*	REAR *TRASERA*	SYSTEM *SISTEMA*	OBS.
MERCEDES-BENZ						
E-320 4MATIC	98 / 00			**PD/1013**		
E-420	97			**PD/1013**		
E-430	98 / 02			**PD/1013**		
E-500	03 / 05	**PD/1009**				
ECONIC	98 /	**PD/116**	Knorr	**PD/116**	Knorr	
INTEGRO (O 550)	00 /	**PD/125**	Meritor			
INTEGRO (O 550)	00 /	**PD/125 (30mm)**	Meritor			
INTEGRO L (O 550)	00 /	**PD/125**	Meritor			
INTEGRO L (O 550)	00 /	**PD/125 (30mm)**	Meritor			
K-1214	91 /	**MB/182**	MB	**MB/182**	MB	
K-1414	91 / 96	**MB/183**	MB	**MB/183**	MB	
K-1418	91 /	**MB/183**	MB	**MB/183**	MB	
K-1718	91 / 93	**MB/184**	MB	**MB/184**	MB	
K-1721	91 /	**MB/184**	MB	**MB/184**	MB	
L / LA / LAK / LAS / LK / LP / LPO / LS-1113	70 / 82	**MB/176**	MB	**MB/176**	MB	
L / LA/ LAK / LK / LPO/ LS/ OF/ OH-1313	70 / 83	**MB/180**	MB	**MB/180**	MB	Freno hidráulico
L / LA/ LAK-1317	86 / 90	**MB/183**	MB	**MB/183**	MB	Freno a aire
L / LA / LAS / LAK / LK / LS-1111	64 / 70	**MB/176**	MB	**MB/176**	MB	
L / LA/ LAS-1114	/ 83	**MB/141**	Frenar	**MB/142**	Frenar	
L / LA / LB / LK-2213	70 / 83	**MB/180**		**MB/180**		3º eixo **MB/180** Freno hidráulico
L / LA / LK-1418	89 / 93	**MB/183**		**MB/183**		Freno a aire
L / LB/ LK-2213	83 / 86	**MB/183**		**MB/183**		3º eixo **MB/183-RA** Freno a aire
L / LB / LK-2214	87 / 90	**MB/183-RA**		**MB/183-RA**		3º eixo **MB/183-RA** Freno a aire
L / LB/ LK-2215	89 / 90	**MB/183-RA**		**MB/183-RA**		3º eixo **MB/183-RA** Freno a aire
L / LB/ LK-2216	83 / 86	**MB/183-RA**		**MB/183-RA**		3º eixo **MB/183-RA** Freno a aire
L / LB/ LK-2216 - L / LK/ LB-2219	78 / 83	**MB/180**		**MB/180**		3º eixo **MB/180** Freno hidráulico
L / LB/ LK-2217	87 / 88	**MB/183-RA**		**MB/183-RA**		3º eixo **MB/183-RA** Freno a aire
L / LB/ LK-2219	83 / 86	**MB/183-RA**		**MB/183-RA**		3º eixo **MB/183-RA** Freno a aire
L / LB/ LK-2220	87 / 91	**MB/183-RA**		**MB/183-RA**		3º eixo **MB/183-RA** Freno a aire
L / LG/ LK/ LS-1519	73 / 82	**MB/180**		**MB/181**		
L / LK/ LB-2013	70 / 83	**MB/180**		**MB/180**		3º eixo **MB/180** Freno hidráulico
L / LK/ LS/ OF-1313	82 / 87	**MB/183-RA**		**MB/183-RA**		Freno a aire
L / LK/ LS/ OH-1316	70 / 83	**MB/180**		**MB/180**		Freno hidráulico
L / LK/ LS/ OH-1316	/ 92	**MB/180**		**MB/181**		
L / LK/ LS-1113	83 / 86	**MB/182**		**MB/182**		Freno a aire
L / LK/ LS-1114	87 / 89	**MB/182**		**MB/182**		Freno a aire
L / LK/ LS-1516/ 1519	83 / 86	**MB/183-RA**		**MB/184-RA**		Freno a aire
L / LK / LS-1938 / 1945	92 /	**MB/184-RA**		**MB/185**		
L / LK-1118	87 / 89	**MB/182**		**MB/182**		Freno a aire
L / LK-1214-1215	/ 96	**MB/182**		**MB/182**		Freno a aire
L / LK-1314	87 / 91	**MB/183-RA**		**MB/183-RA**		Freno a aire
L / LK-1316	82 / 86	**MB/183-RA**		**MB/183-RA**		Freno a aire
L / LK-1316/ 1513/ 1516/ 1620/ 1622/ 1633	83 / 93	**MB/183-RA**		**MB/185**		Freno volteo corto
L / LK-1318	87 / 89	**MB/183-RA**		**MB/183-RA**		Freno a aire
L / LK-1513	83 / 86	**MB/183-RA**		**MB/184-RA**		Freno a aire
L / LK-1513 / LK-1514 / L / LK-1516	/ 92	**MB/180**		**MB/181**		
L / LK-1514 / LS-1520	87 / 89	**MB/183-RA**		**MB/184-RA**		Freno a aire
L / LK-1517	86	**MB/183-RA**		**MB/184-RA**		Freno a aire

MODEL / *MODELO*	YEAR - *AÑO*	FRONT *DELANTERA*	SYSTEM *SISTEMA*	REAR *TRASERA*	SYSTEM *SISTEMA*	OBS.
MERCEDES-BENZ						
L / LK-1518	87 / 90	**MB/183-RA**		**MB/184-RA**		Freno a aire
L / LK-1520	87 / 91	**MB/183-RA**		**MB/184-RA**		Freno a aire
L / LO-608 D		**MB/255-RA**		**MB/255-RA**		Brasilero
L / LO-608 D	80 / 92	**MB/186-RA**		**MB/186-RA**		Argentino
L / LS -1526	83 / 93	**MB/145**	Volteo	**MB/146**	Volteo	
L / LS-1112 / 1114		**MB/140**		**MB/140**		
L / LS-1518	/ 92	**MB/180**		**MB/181**		
L / LS-1924 A	81 / 83	**MB/184-RA**		**MB/185**		
L / LA-1116	70 / 82	**MB/176**		**MB/176**		
L-312		**9058**		**MB/164**		
L-312	TODOS	**MB/155**		**MB/161**		
L-608 D	72 / 80	**MB/186**	MB	**MB/186**	MB	
L-608 D	81 / 86	**MB/187**	MB	**MB/187**	MB	
L-610	87 / 89	**MB/187**	MB	**MB/187**	MB	
L-708 E	87 / 89	**MB/187**	MB	**MB/187**	MB	
L-711 D	88 / 96	**PD/104 PD/104-A**	Varga	**MB/193**		
L-809	88 / 96	**PD/104 PD/104-A**	Varga	**MB/193**		
L-811	88 / 96	**PD/104 PD/104-A**	Varga	**MB/193**		
L-813	90 /	**PD/104 PD/104-A**	Varga	**MB/193**		
L-814	88 / 96	**PD/104 PD/104-A**	Varga	**MB/193**		
L-911		**9058**		**MB/164**		
L-913	90 /	**PD/104 PD/104-A**	Varga	**MB/193**		
L-914	90 / 95	**PD/104 PD/104-A**	Varga	**MB/193**		
L-914		**MB/140**		**MB/140**		
L-1113	83 / 86	**MB/177 MB/182**	MB	**MB/177 MB/182**	MB	
L-1114	87 / 89	**MB/182**	MB	**MB/182**	MB	
L-1115	87 / 88	**MB/182**	MB	**MB/182**	MB	
L-1116	70 / 82	**MB/176**	MB	**MB/176**	MB	
L-1118	87 / 89	**MB/182**	MB	**MB/182**	MB	
L-1214	89 / 96	**MB/182**	MB	**MB/182**	MB	
L-1215	83 / 93	**MB/183**	MB	**MB/185**	MB	Freno volteo corto
L-1218	89 / 97	**MB/182**	MB	**MB/182**	MB	
L-1218	97 /	**MB/183**	MB	**MB/183**	MB	
L-1313	70 / 83	**MB/180**	MB	**MB/180**	MB	
L-1313	83 / 87	**MB/183**	MB	**MB/183**	MB	
L-1314	87 / 91	**MB/183**	MB	**MB/183**	MB	
L-1314	91 /	**MB/184**	MB	**MB/184**	MB	
L-1316	64 / 83	**MB/180**	MB	**MB/181**	MB	
L-1316	70 / 83	**MB/180**	MB	**MB/180**	MB	
L-1316	83 / 86	**MB/183**	MB	**MB/183**	MB	
L-1317	86 / 90	**MB/183**	MB	**MB/183**	MB	
L-1318	87 / 89	**MB/183**	MB	**MB/183**	MB	
L-1318	06 /	**MB/183**	MB	**MB/183 MB/184**	MB	
L-1318	83 / 93	**MB/183**	MB	**MB/185**	MB	Freno volteo corto
L-1319	85	**MB/183**	MB	**MB/184**	MB	
L-1414	89 / 96	**MB/183**	MB	**MB/183**	MB	
L-1418	89 /	**MB/183**	MB	**MB/183**	MB	
L-1513	70 / 82	**MB/180**	MB	**MB/181**	MB	

MODEL / *MODELO*	YEAR - *AÑO*	FRONT *DELANTERA*	SYSTEM *SISTEMA*	REAR *TRASERA*	SYSTEM *SISTEMA*	OBS.
MERCEDES-BENZ						
L-1513	83 / 86	**MB/183**	MB	**MB/184**	MB	
L-1514	87 / 89	**MB/183**	MB	**MB/184**	MB	
L-1516	70 / 83	**MB/180**	MB	**MB/181**	MB	
L-1516	83 / 86	**MB/183**	MB	**MB/184**	MB	
L-1517	86	**MB/183**	MB	**MB/184**	MB	
L-1518	87 / 90	**MB/183**	MB	**MB/184**	MB	
L-1519	73 / 82	**MB/180**	MB	**MB/181**	MB	
L-1519	83 / 86	**MB/183**	MB	**MB/184**	MB	
L-1520	87 / 91	**MB/183**	MB	**MB/184**	MB	
L-1614	89 / 95	**MB/183** **MB/184**	MB	**MB/184**	MB	
L-1618	89 / 96	**MB/183** **MB/184**	MB	**MB/184**	MB	
L-1620	96 /	**MB/184**	MB	**MB/184**	MB	
L-1620 6x2	00 /	**MB/184**	MB	**MB/184**	MB	3º eixo **MB/184**
L-1621	90 / 96	**MB/183**	MB	**MB/184**	MB	
L-1622	00 /	**MB/184**	MB	**MB/184**	MB	
L-1622 6x2	01 /	**MB/184**	MB	**MB/184**	MB	3° eixo **MB/184**
L-1625	90 / 94	**MB/184**	MB	**MB/184**	MB	
L-1625	94 /	**MB/184**	MB	**MB/184**	MB	
L-1630	90 /	**MB/184**	MB	**MB/184**	MB	Freno a aire
L-1635	94 /	**MB/184**	MB	**MB/184**	MB	
L-1714	91 /	**MB/184**	MB	**MB/184**	MB	
L-1924-A	81 / 83	**MB/184**	MB	**MB/185**	MB	
L-2013	70 / 83	**MB/180**	MB	**MB/180**	MB	3° eixo **MB/180**
L-2013	83 / 86	**MB/183**	MB	**MB/183**	MB	3° eixo **MB/183**
L-2013	83 / 93	**MB/183**	MB	**MB/185**	MB	Freno volteo corto
L-2014	87 / 90	**MB/183**	MB	**MB/183**	MB	3° eixo **MB/183**
L-2118	91 /	**MB/183**	MB	**MB/183**	MB	
L-2213	70 / 83	**MB/180**	MB	**MB/180**	MB	3° eixo **MB/180**
L-2213	83 / 93	**MB/183**	MB	**MB/185**	MB	Freno volteo corto
L-2213	83 / 86	**MB/183**	MB	**MB/183**	MB	3° eixo **MB/183**
L-2214	87 / 90	**MB/183**	MB	**MB/183**	MB	3° eixo **MB/183**
L-2215	83 / 90	**MB/183**	MB	**MB/183**	MB	3° eixo **MB/183**
L-2216	78 / 83	**MB/180**	MB	**MB/180**	MB	3° eixo **MB/180**
L-2216	83 / 86	**MB/183**	MB	**MB/183**	MB	3° eixo **MB/183**
L-2216	83 / 93	**MB/183**		**MB/185**		Freno volteo corto
L-2217	87 / 88	**MB/183**	MB	**MB/183**	MB	3° eixo **MB/183**
L-2219	78 / 83	**MB/180**	MB	**MB/180**	MB	3° eixo **MB/180**
L-2219	83 / 86	**MB/183**	MB	**MB/183**	MB	3° eixo **MB/183**
L-2220	87 / 91	**MB/183**	MB	**MB/183**	MB	3° eixo **MB/183**
L-2225	89 / 91	**MB/183**	MB	**MB/183**	MB	3° eixo **MB/183**
L-2314	90 / 93	**MB/183**	MB	**MB/183**	MB	3° eixo **MB/183**
L-2318	90 / 99	**MB/183**	MB	**MB/183**	MB	3° eixo **MB/183**
L-2325	90 / 00	**MB/183**	MB	**MB/183**	MB	3° eixo **MB/183**
L-2414	91 /	**MB/183**	MB	**MB/183**	MB	
L-2635	93 / 99	**MB/184**	MB	**MB/185**	MB	3° eixo **MB/185**
L-2638	99 /	**MB/184**	MB	**MB/185**	MB	3° eixo **MB/185**
L-3500		**9058**		**MB/164**		Recto
L-3500		**MB/155**		**MB/161**		Curvo
LA/ LAK -1418	89 /	**MB/182**		**MB/182**		Freno a aire
LA/ LAK-1313 / 1316	82 / 87	**MB/182**		**MB/182**		Freno a aire
LA/ LAK-1313 / 1316	82 / 87	**MB/182**		**MB/183-RA**		Freno a aire
LA/ LAK-1314 / 1317 / 1318	87 / 90	**MB/182**		**MB/182**		Freno a aire
LA/ LAK-1314 / 1317 / 1318	87 / 90	**MB/182**		**MB/183-RA**		Freno a aire

MODEL / *MODELO*	YEAR - *AÑO*	FRONT *DELANTERA*	SYSTEM *SISTEMA*	REAR *TRASERA*	SYSTEM *SISTEMA*	OBS.
MERCEDES-BENZ						
LA-1111	64 / 70	**MB/176**	MB	**MB/176**	MB	
LA-1113	70 / 82	**MB/176**	MB	**MB/176**	MB	
LA-1113	83 / 86	**MB/182**	MB	**MB/182**	MB	
LA-1116	70 / 82	**MB/176**	MB	**MB/176**	MB	
LA-1313	70 / 83	**MB/180**	MB	**MB/180**	MB	
LA-1313	83 / 87	**MB/182**	MB	**MB/183**	MB	
LA-1314	87 / 90	**MB/182**	MB	**MB/183**	MB	
LA-1316	82 / 90	**MB/182**	MB	**MB/183**	MB	
LA-1317	86 / 90	**MB/182** **MB/183**	MB	**MB/183**	MB	
LA-1318	87 / 90	**MB/182**	MB	**MB/183**	MB	
LA-1418	89 /	**MB/183**	MB	**MB/183**	MB	
LA-2013	70	**MB/180**	MB	**MB/180**	MB	
LA-2213	70 / 83	**MB/180**	MB	**MB/180**	MB	3° eixo **MB/180**
LAK-1111	64 / 70	**MB/176**	MB	**MB/176**	MB	
LAK-1113	70 / 82	**MB/176**	MB	**MB/176**	MB	
LAK-1113	83 / 86	**MB/182**	MB	**MB/182**	MB	
LAK-1313	70 / 83	**MB/180**	MB	**MB/180**	MB	
LAK-1313	83 / 87	**MB/182**	MB	**MB/183**	MB	
LAK-1314	87 / 90	**MB/182**	MB	**MB/183**	MB	
LAK-1316	82 / 90	**MB/182**	MB	**MB/183**	MB	
LAK-1317	86 / 90	**MB/182** **MB/183**	MB	**MB/183**	MB	
LAK-1318	87 / 90	**MB/182**	MB	**MB/183**	MB	
LAK-1418	89 / 93	**MB/182**	MB	**MB/183**	MB	
LAK-2013	70	**MB/180**	MB	**MB/180**	MB	
LAS-1111	64 / 70	**MB/176**	MB	**MB/176**	MB	
LAS-1113	70 / 82	**MB/176**	MB	**MB/176**	MB	
LAS-1113	83 / 86	**MB/182**	MB	**MB/182**	MB	
LB/ LK-2318	90 / 93	**MB/183**		**MB/183**		3° eixo **MB/183-RA** Freno a aire
LB/ LK-2325	90 / 93	**MB/183**		**MB/183**		3° eixo **MB/183-RA** Freno a aire
LB-2013	70 / 83	**MB/180**	MB	**MB/180**	MB	3° eixo **MB/180**
LB-2213	70 / 83	**MB/180**	MB	**MB/180**	MB	3° eixo **MB/180**
LB-2213	83 / 86	**MB/183**	MB	**MB/183**	MB	3° eixo **MB/183**
LB-2214	87 / 90	**MB/183**	MB	**MB/183**	MB	3° eixo **MB/183**
LB-2215	89 / 90	**MB/183**	MB	**MB/183**	MB	3° eixo **MB/183**
LB-2216	78 / 83	**MB/180**	MB	**MB/180**	MB	3° eixo **MB/180**
LB-2216	83 / 86	**MB/183**	MB	**MB/183**	MB	3° eixo **MB/183**
LB-2217	87 / 88	**MB/183**	MB	**MB/183**	MB	3° eixo **MB/183**
LB-2219	78 / 83	**MB/180**	MB	**MB/180**	MB	3° eixo **MB/180**
LB-2219	83 / 86	**MB/183**	MB	**MB/183**	MB	3° eixo **MB/183**
LB-2220	87 / 91	**MB/183**	MB	**MB/183**	MB	3° eixo **MB/183**
LB-2318	90 / 93	**MB/183**	MB	**MB/183**	MB	3° eixo **MB/183**
LB-2325	90 / 93	**MB/183**	MB	**MB/183**	MB	3° eixo **MB/183**
LB-2423 6x2	95 / 96	**MB/184**	MB	**MB/184**	MB	3° eixo **MB/184**
LG-1519	73 / 83	**MB/180**	MB	**MB/181**	MB	
LG-1825	91 /	**MB/183**	MB	**MB/183**	MB	
LK-1111	64 / 70	**MB/176**	MB	**MB/176**	MB	
LK-1113	70 / 82	**MB/176**	MB	**MB/176**	MB	
LK-1113	83 / 86	**MB/177** **MB/182**	MB	**MB/177** **MB/182**	MB	
LK-1114	87 / 89	**MB/182**	MB	**MB/182**	MB	
LK-1115	87 /	**MB/182**	MB	**MB/182**	MB	
LK-1118	87 / 89	**MB/182**	MB	**MB/182**	MB	

MODEL / *MODELO*	YEAR - *AÑO*	FRONT *DELANTERA*	SYSTEM *SISTEMA*	REAR *TRASERA*	SYSTEM *SISTEMA*	OBS.
MERCEDES-BENZ						
LK-1214	89 / 93	**MB/182**	MB	**MB/182**	MB	
LK-1313	70 / 83	**MB/180**	MB	**MB/180**	MB	
LK-1313	83 / 87	**MB/183**	MB	**MB/183**	MB	
LK-1313	83 / 86	**MB/183**	MB	**MB/184**	MB	Eixo HL5
LK-1314	87 / 91	**MB/183**	MB	**MB/183**	MB	
LK-1314	91 /	**MB/184**		**MB/184**		
LK-1316	64 / 83	**MB/180**	MB	**MB/180** **MB/181**	MB	
LK-1316	83 / 86	**MB/183**	MB	**MB/183**	MB	
LK-1317	86	**MB/183**	MB	**MB/183**	MB	
LK-1318	87 / 89	**MB/183**	MB	**MB/183**	MB	
LK-1414	89 / 93	**MB/183**	MB	**MB/183**	MB	
LK-1418	89 / 93	**MB/183**	MB	**MB/183**	MB	
LK-1513	70 / 83	**MB/180**	MB	**MB/181**	MB	
LK-1513	83 / 86	**MB/183**	MB	**MB/184**	MB	
LK-1514	87 / 89	**MB/183**	MB	**MB/184**	MB	
LK-1516	70 / 83	**MB/180**	MB	**MB/181**	MB	
LK-1516	83 / 86	**MB/183**	MB	**MB/184**	MB	
LK-1517	86	**MB/183**	MB	**MB/184**	MB	
LK-1518	87 / 90	**MB/183**	MB	**MB/184**	MB	
LK-1519	73 / 82	**MB/180**	MB	**MB/181**	MB	
LK-1519	83 / 86	**MB/183**	MB	**MB/184**	MB	
LK-1520	87 / 90	**MB/183**	MB	**MB/184**	MB	
LK-1614	90 / 93	**MB/183** **MB/184**	MB	**MB/184**	MB	
LK-1618	89 / 93	**MB/183** **MB/184**	MB	**MB/184**	MB	
LK-1620	00 /	**MB/184**	MB	**MB/184**	MB	
LK-1621	90 / 93	**MB/183**	MB	**MB/184**	MB	
LK-1714	91 /	**MB/184**	MB	**MB/184**	MB	
LK-2013	70 / 83	**MB/180**	MB	**MB/180**	MB	3° eixo **MB/180**
LK-2213	70 / 83	**MB/180**	MB	**MB/180**	MB	3° eixo **MB/180**
LK-2213	83 / 86	**MB/183**	MB	**MB/183**	MB	3° eixo **MB/183**
LK-2214	87 / 90	**MB/183**	MB	**MB/183**	MB	3° eixo **MB/183**
LK-2215	89 / 90	**MB/183**	MB	**MB/183**	MB	3° eixo **MB/183**
LK-2216	78 / 83	**MB/180**	MB	**MB/180**	MB	3° eixo **MB/180**
LK-2216	83 / 86	**MB/183**	MB	**MB/183**	MB	3° eixo **MB/183**
LK-2217	87 / 88	**MB/183**	MB	**MB/183**	MB	3° eixo **MB/183**
LK-2219	78 / 83	**MB/180**	MB	**MB/180**	MB	3° eixo **MB/180**
LK-2219	83 / 86	**MB/183**	MB	**MB/183**	MB	3° eixo **MB/183**
LK-2220	87 / 91	**MB/183**	MB	**MB/183**	MB	3° eixo **MB/183**
LK-2318	90 / 93	**MB/183**	MB	**MB/183**	MB	3° eixo **MB/183**
LK-2325	90 / 93	**MB/183**	MB	**MB/183**	MB	3° eixo **MB/183**
LK-2420	91 /	**MB/183**	MB	**MB/183**	MB	
LK-2638	99 /	**MB/184**	MB	**MB/185**	MB	3° eixo **MB/185**
LO-1114	83 / 93	**MB/145**	Volteo	**MB/146**	Volteo	
LO-608 D	72 / 80	**MB/186**	MB	**MB/186**	MB	
LO-608 D	81 / 86	**MB/187**	MB	**MB/187**	MB	
LO-610	02 /	**PD/104**	Varga	**FD/77**	Master	
LO-708 E	87 / 89	**MB/187**	MB	**MB/187**	MB	
LO-709	88 /	**PD/104**	Varga	**MB/193**	MB	
LO-712	92 / 94	**PD/104**	Varga	**MB/193**	MB	
LO-712	02 /	**PD/104**	Varga	**FD/77**	Master	
LO-812	88 / 96	**PD/104** **PD/104-A**	Varga	**MB/193**	MB	

MODEL / *MODELO*	YEAR - *AÑO*	FRONT *DELANTERA*	SYSTEM *SISTEMA*	REAR *TRASERA*	SYSTEM *SISTEMA*	OBS.
MERCEDES-BENZ						
LO-812	02 /	**PD/104**	Varga	**FD/77**	Master	
LO-814	96 / 98	**PD/104 PD/104-A**	Varga	**MB/193**	MB	
LO-814	02 /	**PD/104**	Varga	**FD/77**	Master	
LO-911		**9058**		**MB/164**		
LO-912	88 /	**PD/104**	Varga	**MB/193**	MB	
LO-914	98 /	**PD/117 PD/117-A**	Wabco	**PD/117 PD/117-A**	Wabco	
LO-915	03 /	**PD/117 PD/117-A**	Wabco Perrot	**PD/117 PD/117-A**	Wabco Perrot	
LO-916	12 / 13	**FD/59**		**FD/59**	Master	
LP / LPK / LPO / LPS-1520	67 / 78	**MB/180**		**MB/181**		
LP / O / OM-321 (OM-352)	70 / 82	**MB/176**		**MB/176**		
LP-1113	70 / 82	**MB/176**	MB	**MB/176**	MB	
LP-1113	83 / 86	**MB/182**	MB	**MB/182**	MB	
LP-1520	67 / 78	**MB/180**	MB	**MB/181**	MB	
LP-321	/ 64	**MB/164**		**MB/161**		
LP-321	70 / 82	**MB/176**	MB	**MB/176**	MB	
LP-331	64 / 72					
LP-911 B 4x2	01-67 / 03-77	**MB/74/75/2**				
LPK-1520	64 / 72			**4515**		
LPK-1520	67 / 78	**MB/180**	MB	**MB/181**	MB	
LPO-1111	77 / 83	**MB/179**	MB	**MB/179**	MB	
LPO-1113	70 / 82	**MB/176**	MB	**MB/176**	MB	
LPO-1113	77 / 83	**MB/179**	MB	**MB/179**	MB	
LPO-1113	83 / 86	**MB/182**	MB	**MB/182**	MB	
LPO-1313	70 / 83	**MB/180**	MB	**MB/180**	MB	
LPO-1520	67 / 78	**MB/180**	MB	**MB/181**	MB	
LPO-334	64 / 82	**MB/176**	MB	**MB/176**	MB	
LPS-1520	64 / 72			**4515**		
LPS-1520	67 / 78	**MB/180**	MB	**MB/181**	MB	
LPS-331 S	64 / 72			**4515**		
LPS-911 B	01-67 / 03-77	**MB/74/75/2**				
LS-1111	64 / 70	**MB/176**	MB	**MB/176**	MB	
LS-1113	70 / 82	**MB/176**	MB	**MB/176**	MB	
LS-1113	83 / 86	**MB/182**	MB	**MB/182**	MB	
LS-1114	87 / 89	**MB/182**	MB	**MB/182**	MB	
LS-1115	87 /	**MB/182**	MB	**MB/182**	MB	
LS-1118	87 /	**MB/182**	MB	**MB/182**	MB	
LS-1313	70 / 83	**MB/180**	MB	**MB/180**	MB	
LS-1313	83 / 87	**MB/183**	MB	**MB/183**	MB	
LS-1314	87 / 89	**MB/183**	MB	**MB/183**	MB	
LS-1316	64 / 83	**MB/180**	MB	**MB/180 MB/181**	MB	
LS-1324	76 / 83	**MB/184**	MB	**MB/185**	MB	
LS-1517	/ 92	**MB/180**	MB	**MB/181**	MB	
LS-1519	73 / 82	**MB/180**	MB	**MB/181**	MB	
LS-1519	83 / 86	**MB/183**	MB	**MB/184**	MB	
LS-1520	87 / 89	**MB/183**	MB	**MB/184**	MB	
LS-1524	83 / 87	**MB/183**	MB	**MB/184**	MB	
LS-1525	88 / 90	**MB/183**	MB	**MB/184**	MB	
LS-1625	90 / 96	**MB/184**	MB	**MB/184**	MB	
LS-1630	90 / 98	**MB/184**	MB	**MB/184**	MB	
LS-1632	98 /	**MB/184**	MB	**MB/185**	MB	
LS-1634	07	**MB/183**	MB			

MODEL / *MODELO*	YEAR - *AÑO*	FRONT *DELANTERA*	SYSTEM *SISTEMA*	REAR *TRASERA*	SYSTEM *SISTEMA*	OBS.
MERCEDES-BENZ						
LS-1634	00 /	**MB/184**	MB	**MB/185**	MB	
LS-1634	02 /	**PD/116-K**	Knorr	**PD/116-K**	Knorr	
LS-1924-A	76 / 83	**MB/184**	MB	**MB/185**	MB	
LS-1929	76 / 86	**MB/184**	MB	**MB/185**	MB	
LS-1930	87 / 89	**MB/184**	MB	**MB/185**	MB	
LS-1932	84 / 86	**MB/184**	MB	**MB/185**	MB	
LS-1933	87 / 89	**MB/184**	MB	**MB/185**	MB	
LS-1934	88 / 90	**MB/184**	MB	**MB/185**	MB	
LS-1935	90 / 98	**MB/184**	MB	**MB/185**	MB	
LS-1938	98 /	**PD/116-K**	Knorr	**PD/116-K**	Knorr	Eletrônico
LS-1941	90 / 98	**MB/184**	MB	**MB/185**	MB	
LS-2038	96 /	**MB/184**	MB	**MB/185**	MB	
LS-2624	79 / 84	**MB/184**	MB	**MB/185**	MB	
LS-2635	95 / 99	**MB/184**	MB	**MB/185**	MB	3° eixo **MB/185**
LS-2638	99 /	**MB/184**	MB	**MB/185**	MB	3° eixo **MB/185**
MB-180 D	94 / 96	**PD/108**	Bendix	**MB/156-S/F MB/156-CP**		
MEDIO	02 /	**PD/104**	Teves	**PD/104**	Teves	
ML 230	98 /	**PD/1007-A**		**PD/1012-B**	K. Hayes	
ML 270	00 /	**PD/1007-A**		**PD/1012-B**	K. Hayes	
ML 320	98 /	**PD/1007-A**		**PD/1012-B**	K. Hayes	
ML 320	94 / 05	**PD/1007**		**PD/1056**		
ML 350	03 / 05	**PD/1007**		**PD/1056**		
ML 430	11-98 / 08-99	**PD/1007-A**		**PD/1056**	1012-B	K. Hayes
ML 430	00 / 02	**PD/1009**	Meritor	**PD/125**		
ML 500	02 / 05	**PD/1009**	Teves			
ML-500 W163 5.4L	02 / 05	**PD/1009**	Teves			
ML-55 AMG W163	01 / 03	**PD/1009**	MB	**MB/140**		
O 404	91 /	**PD/125**	MB	**MB/181**	Meritor	
O 409 5 / 6 / 7 ton SERIES	86 /	**PD/104**		**MB/76/77/2**		
O 609 / O 611 / O 614		**PD/104**		**MB/76/77/2**		
O-140		**MB/140**		**MB/76/77/2**	MB	
O-170	/ 92	**MB/180**		**MB/76/77/2**	MB	
O-303 4x2	10-74 / 09-92		MB	**9202**		
O-305 G 6x2	02-78 / 05-87		MB	**MB/161**		
O-305 ST 4x2	01-69 / 05-87		MB	**MB/176**		
O-307 4x2	04-73 / 08-87		MB	**MB/181**		
O-317		**9202**	Meritor	**PD/125**	MB	
O-321	/ 64	**MB/164**	Meritor	**PD/125**	MB	
O-321	70 / 82	**MB/176**	MB	**MB/176**	MB	
O-326	64 / 78	**MB/180**	MB	**MB/181**	MB	
O-340	92 /	**PD/125**	MB	**MB/181**	Meritor	
O-350	92 /	**PD/125**	MB	**MB/181**	Meritor	
O-352	70 / 82	**MB/176**	MB	**MB/181**	MB	
O-355	73 / 78	**MB/180**	MB	**MB/181**	MB	
O-355	/ 92	**MB/180**	MB	**MB/190**	MB	
O-362	73 / 78	**MB/180**	MB	**MB/190**	MB	
O-362	/ 92	**MB/180**	MB	**MB/181**	MB	
O-364	79 / 85	**MB/180**	MB	**MB/181 MB/190**	MB	
O-364	85 / 86	**MB/190**	MB	**MB/191**	MB	
O-364	85 / 90	**MB/190**	MB	**MB/191**	MB	
O-364	/ 92	**MB/180**	MB	**MB/191**	MB	
O-365	87 / 90	**MB/180 MB/190**	MB	**MB/191**	MB	

MODEL / *MODELO*	YEAR - *AÑO*	FRONT *DELANTERA*	SYSTEM *SISTEMA*	REAR *TRASERA*	SYSTEM *SISTEMA*	OBS.
MERCEDES-BENZ						
O-370 R	86	**MB/190**	MB	**MB/191**	MB	
O-370 RS	84 / 89	**MB/190**	MB	**MB/191**	MB	
O-370 RSD	84 / 88	**MB/190**	MB	**MB/191**	MB	Apoio MB/190
O-371 R	87 / 96	**MB/190**	MB	**MB/191**	MB	
O-371 RS	87 / 93	**MB/190**	MB	**MB/191**	MB	
O-371 RSD	87 / 95	**MB/190**	MB	**MB/191**	MB	Apoio MB/190
O-371 RSL	92 / 94	**MB/190**	MB	**MB/191**	MB	
O-371 U	87 / 96	**MB/190**	MB	**MB/191**	MB	
O-371 U	92 / 95	**MB/190**	MB	**MB/191**	MB	Gás
O-371 UL	92 / 95	**MB/190**	MB	**MB/191**	MB	
O-371 UP	87 / 96	**MB/190**	MB	**MB/191**	MB	
O-373 / 374	92 /	**MB/190**	MB	**MB/191**	MB	
O-400 R	95 / 96	**MB/190**	MB	**MB/191**	MB	
O-400 RS	95 / 96	**MB/190**	MB	**MB/191**	MB	
O-400 RSD	94 /	**MB/190**	MB	**MB/191**	MB	Apoio MB/190
O-400 RSE	95 /	**MB/190**	MB	**MB/191**	MB	
O-400 RSL	95 / 97	**MB/190**	Meritor	**PD/125**	MB	
O-400 UP	95	**MB/190**		**MB/76/77/2**	MB	
O-400 UPA	02 /	**MB/190**		**MB/76/77/2**	MB	Articulado MB/191
O-400 UPA 6x2	98 / 00	**MB/190**		**MB/76/77/2**	MB	3º eixo MB/191
O-404	91 /	**PD/125**		**MB/76/77/2**	Meritor	
O-405 G 6x2	11-85 /			**MB/76/77/2**		
O-405 GN 6x2	11-85 /			**MB/76/77/2**		
O-405 GTD 6x2	11-85 /			**MB/76/77/2**		
O-405 N 4x2	12-84 /		MB	**MB/191**		
O-405 ST 4x2	12-84 /		Meritor			
O-407 4x2	03-87 / 11-01		MB	**MB/191**		
O-408 4x2	01-91 / 12-98		Knorr	**PD/116-K**		
O-500	01 /	**MB/190**	Meritor		MB	
O-500	00 /	**PD/125**	MB	**MB/191**		
O-500 (ARTICULADO)	06 /	**MB/190**	MB	**MB/191**	MB	3º eixo **MB/188 / MB/191**
O-500-U (Articulado)	06 /	**PD/116-K**	MB	**MB/191**	Knorr	3º eixo **PD/116-K**
O-550	00 /	**PD/125**	Frenar	**MB/142**		
O-550 R 4x2		**MB/190**	MB	**MB/183**	MB	
O-550 RS 6x2		**MB/190**	MB	**MB/183**	MB	
O-550 RSD 6x2		**MB/190**	MB	**MB/183**	MB	3º eixo **MB/190**
OC / OF-1214	/ 83	**MB/141**	Volteo	**MB/146**	Frenar	
OF-1113	82 / 86	**MB/183**		**MB/191**	MB	
OF-1114	87 / 90	**MB/183**	Knorr	**MB/195**	MB	
OF-1115	87 / 92	**MB/183**	MB	**MB/180**	MB	
OF-1214	83 / 93	**MB/145**	MB	**MB/183**	Volteo	
OF-1215	06-93 /	**MB/146**	MB	**MB/183**		
OF-1218	08 /	**MB/194**	MB	**MB/183**	Knorr	
OF-1313	70 / 83	**MB/180**	MB	**MB/185**	MB	
OF-1313	83 / 87	**MB/183**	MB	**MB/183**	MB	
OF-1314	87 / 89	**MB/183**	MB	**MB/185**	MB	
OF-1315	88 / 93	**MB/183**	MB	**MB/184 MB/185 MB/188**	MB	
OF-1315 / 1318 / 1320	92 /	**MB/184**	MB	**MB/185**	MB	
OF-1318	87 / 98	**MB/183**	MB	**MB/185**	MB	
OF-1318	95 /	**MB/184**	MB	**MB/188**	MB	
OF-1417	98 /	**MB/184**	MB	**MB/188**	MB	

MODEL / *MODELO*	YEAR - *AÑO*	FRONT *DELANTERA*	SYSTEM *SISTEMA*	REAR *TRASERA*	SYSTEM *SISTEMA*	OBS.
MERCEDES-BENZ						
OF-1418	04 /	**MB/184**	MB	**MB/185**	MB	
OF-1519		**MB/184**	MB	**MB/184**	MB	
OF-1618	92 / 96	**MB/184**	MB	**MB/188**	MB	
OF-1620	93 / 98	**MB/184**	MB	**MB/188**	MB	
OF-1621	97 /	**MB/184**	MB	**MB/188**	MB	
OF-1622		**MB/183**	MB	**AC/11 AC/11-RA**	MB	
OF-1721	98 /	**MB/184**	MB	**MB/180**	MB	
OF-1722	02 /	**MB/184**	MB	**MB/184**	MB	Eletrônico
OF-1724		**MB/184**	MB	**MB/184**	MB	
OH-1115-L	00 /	**PD/120**	MB	**MB/184**	MB	
OH-1313	70 / 83	**MB/180**	MB	**MB/184**	MB	
OH-1313	83 / 87	**MB/183**		**MB/146**	MB	
OH-1314	87 / 90	**MB/183**		**MB/191**	MB	
OH-1315	87 / 95	**MB/183**	MB	**MB/180 MB/181**	MB	
OH-1315 Gas	91 / 95	**MB/183**	MB	**MB/184**	MB	Freno a aire
OH-1315 / 1316 / 1320	/ 05-93	**MB/146**	MB	**MB/184**		
OH-1315 / 1316 / 1320/ 1420	06-93 /	**MB/146**	MB	**MB/191**		
OH-1316	64 / 83	**MB/180**	MB	**MB/191**	MB	
OH-1316	83 / 86	**MB/183**	MB	**MB/181**	MB	
OH-1318	89 / 96	**MB/183**	MB	**MB/184**	MB	
OH-1417	03 /	**MB/190**		**MB/185**	MB	
OH-1418	03 /	**MB/190**	MB	**MB/184**	MB	
OH-1419	79 / 82	**MB/180**	MB	**MB/184 MB/185**	MB	
OH-1419	83 / 86	**MB/183**	MB	**MB/188**	MB	
OH-1419 / 1526	83 / 93	**MB/183**		**MB/146**		Freno volteo corto
OH-1420	87 / 90	**MB/183**	MB	**MB/188**	MB	
OH-1420	98 / 03	**MB/184**	MB	**MB/181**	MB	
OH-1420	03 /	**MB/184**	MB	**MB/184**	MB	
OH-1420 / 1522 / 1526	/ 05-93	**MB/146**	MB	**MB/181**		
OH-1421 L	99 / 03	**MB/184**	MB	**MB/184**	MB	
OH-1517	77 / 82	**MB/180**	MB	**MB/191**	MB	
OH-1517	83 / 86	**MB/183**		**MB/181**	MB	
OH-1517	/ 92	**MB/180**	MB	**MB/184**	MB	
OH-1518	87 / 90	**MB/183**		**MB/184**	MB	
OH-1518	07 /	**MB/190**	MB	**MB/188**	MB	
OH-1519	/ 92	**MB/180**	MB	**MB/188**		
OH-1520	89 / 93	**MB/183**		**AC/11 AC/11-RA**	MB	
OH-1520 / L / LK-1618	89 / 93	**MB/183**	MB	**MB/188**		Freno a aire
OH-1621 L	97 /	**MB/184**	MB	**MB/188**	MB	
OH-1621 LE	97 / 01	**MB/184**		**MB/188**	MB	
OH-1621-L Piso Bajo	97 /	**AC/10 AC/10-RA**	MB	**MB/188**		
OH-1623 LG	00 /	**MB/184**	MB	**MB/188**	MB	
OH-1625 L	93 / 97	**MB/184**	MB	**MB/188**	MB	
OH-1625 L	96 / 97	**MB/184**		**MB/188**		
OH-1628	98 /	**MB/184**	MB	**MB/188**	MB	
OH-1628 L	98 / 05	**MB/184**	MB	**MB/188**	MB	
OH-1630	94 /	**MB/184**	MB	**MB/191**	MB	
OH-1630 L	93 /	**MB/184**	MB	**MB/188**		
OH-1635 L	95 /	**MB/184**		**AC/11 AC/11-RA**	MB	
OH-1636 L	98 / 99	**MB/184**		**MB/181**	MB	

MODEL / *MODELO*	YEAR - *AÑO*	FRONT *DELANTERA*	SYSTEM *SISTEMA*	REAR *TRASERA*	SYSTEM *SISTEMA*	OBS.
MERCEDES-BENZ						
OH-1636 L	02 /	**MB/190**	MB	**MB/176**	MB	
OH-1721	00 /	**MB/184**	MB	**MB/181**	MB	
OH-1721 L SB	97 /	**AC/10 AC/10-RA**	MB Bendix	**MB/180 4514-G**		
OH-2219	/ 92	**MB/180**		**PD/1010**		
OM-321	70 / 82	**MB/176**			MB	
OM-326	64 / 78	**MB/180**			MB	
ÔNIBUS	Todos	**MB/180 4524-B**		**PD/116**	MB Bendix	
S-430	00 / 05	**PD/1009**		**PD/116**		
S55 AMG	03 / 04	**PD/1016**				
S55 AMG	99 /	**PD/1472**				
S65 AMG	06	**PD/1016**				
SERIE O	06 / 07	**PD/116**				
SETRA TOP CLASS 417	06 / 07	**PD/116**				
SL-500	00 / 05	**PD/1009**		**PD/1050**		
SL55 AMG	03 / 04	**PD/1016**		**PD/1050**		
SL55 AMG PERFORMANCE PACKAGE	05 / 06	**PD/1016**		**PD/1050**		
SL65 AMG	05 / 06	**PD/1016**		**PD/1050**		
SLK-230 2.3L	97 / 04	**PD/1043**				
SLK-32 AMG	01 /	**PD/1043**				
SLK 320 32 AMG KOMPRESSOR	01 / 04	**PD/1472**				
SLK-320	04 /	**PD/1043**				
SLK-320 2.3L	01 / 02	**PD/1043**				
SPRINTER 208CDi / 211CDi / 213CDi / 214 NGT / 216CDi	05-00 / 05-06	**PD/417-A**	Teves	**PD/659-A**	Teves	
SPRINTER 208D / 210D / 212D / 214	95 / 04-00	**PD/417-A**	Teves	**PD/659-A**	Teves	
SPRINTER 3 /5 Platform/Chassis (906) - 309 CDI	06-06 /	**PD/662**	Brembo			
SPRINTER 3 /5 Platform/Chassis (906) - 310 CDI	03-09 /	**PD/662**	Brembo			
SPRINTER 3 /5 Platform/Chassis (906) - 311 CDI 4x4 (906.133 / 906.135 / 906.233 / 906.235)	02-08 /	**PD/662**	Brembo			
SPRINTER 3 /5 Platform/Chassis (906) - 311 CDI	06-06 /	**PD/662**	Brembo			
SPRINTER 3 /5 Platform/Chassis (906) - 313 CDI 4x4	06-06 /	**PD/662**	Brembo			
SPRINTER 3 /5 Platform/Chassis (906) - 313 CDI	06-06 /	**PD/662**	Brembo			
SPRINTER 3 /5 Platform/Chassis (906) - 315 CDI 4x4 (906.133 / 906.135 / 906.233 / 906.235)	02-08 /	**PD/662**	Brembo			
SPRINTER 3 /5 Platform/Chassis (906) - 315 CDI	06-06 /	**PD/662**	Brembo			
SPRINTER 3 /5 Platform/Chassis (906) - 316 (906.133 / 906.135 / 906.233 / 906.235)	09-08 /	**PD/662**	Brembo			
SPRINTER 3 /5 Platform/Chassis (906) - 316 CDI (906.131 / 906.133 / 906.135 / 906.231 / 906.233)	03-09 /	**PD/662**	Brembo			
SPRINTER 3 /5 Platform/Chassis (906) - 316 CDI 4x4 (906.131 / 906.133 / 906.231 / 906.233)	03-09 /	**PD/662**	Brembo			
SPRINTER 3 /5 Platform/Chassis (906) - 316 NGT (906.133 / 906.135)	09-08 /	**PD/662**	Brembo			
SPRINTER 3 /5 Platform/Chassis (906) - 318 CDI 4x4 (906.133 / 906.135 / 906.233 / 906.235)	02-08 /	**PD/662**	Brembo			
SPRINTER 3 /5 Platform/Chassis (906) - 318 CDI	06-06 /	**PD/662**	Brembo			
SPRINTER 3 /5 Platform/Chassis (906) - 319 CDI (906.131 / 906.133 / 906.135 / 906.231 / 906.233)	03-09 /	**PD/662**	Brembo			
SPRINTER 3 /5 Platform/Chassis (906) - 319 CDI 4x4 (906.131 / 906.133 / 906.135 / 906.231 / 906.235)	05-11 /	**PD/662**	Brembo			
SPRINTER 3 /5 Platform/Chassis (906) - 324	06-06 /	**PD/662**	Brembo			
SPRINTER 3 /5-t Box (906) - 309 CDI	06-06 /	**PD/662**	Brembo			
SPRINTER 3 /5-t Box (906) - 310 CDI	03-09 /	**PD/662**	Brembo			
SPRINTER 3 /5-t Box (906) - 311 CDI 4x4 (906.633 / 906.635 / 906.637)	02-08 /	**PD/662**	Brembo			
SPRINTER 3 /5-t Box (906) - 311 CDI	06-06 /	**PD/662**	Brembo			
SPRINTER 3 /5-t Box (906) - 313 CDI 4x4	05-09 /	**PD/662**	Brembo			
SPRINTER 3 /5-t Box (906) - 313 CDI	05-09 /	**PD/662**	Brembo			
SPRINTER 3 /5-t Box (906) - 313 CDI	05-09 /	**PD/662**	Brembo			

MODEL / *MODELO*	YEAR - *AÑO*	FRONT *DELANTERA*	SYSTEM *SISTEMA*	REAR *TRASERA*	SYSTEM *SISTEMA*	OBS.
MERCEDES-BENZ						
SPRINTER 3 /5-t Box (906) - 315 CDI 4x4 (906.633 / 906.635 / 906.637)	02-08 /	**PD/662**	Brembo			
SPRINTER 3 /5-t Box (906) - 315 CDI	06-06 /	**PD/662**	Brembo			
SPRINTER 3 /5-t Box (906) - 316 (906.633 / 906.365 / 906.637)	09-08 /	**PD/662**	Brembo			
SPRINTER 3 /5-t Box (906) - 316 CDI (906.631 / 906.633 / 906.635 / 906.637)	03-09 /	**PD/662**	Brembo			
SPRINTER 3 /5-t Box (906) - 316 CDI 4x4 (906.631 / 906.633 / 906.635 / 906.637)	03-09 /	**PD/662**	Brembo			
SPRINTER 3 /5-t Box (906) - 316 NGT (906.633 / 906.635)	09-08 /	**PD/662**	Brembo			
SPRINTER 3 /5-t Box (906) - 318 CDI 4x4 (906.633 / 906.635 / 906.637)	02-08 /	**PD/662**	Brembo			
SPRINTER 3 /5-t Box (906) - 318 CDI	06-06 /	**PD/662**	Brembo			
SPRINTER 3 /5-t Box (906) - 319 CDI (906.631 / 906.633 / 906.635 / 906.637)	03-09 /	**PD/662**	Brembo			
SPRINTER 3 /5-t Box (906) - 319 CDI 4x4	03-09 /	**PD/662**	Brembo			
SPRINTER 3 /5-t Box (906) - 324	06-06 /	**PD/662**	Brembo			
SPRINTER 3 /5-t Bus (906) - 310 CDI	03-09 /	**PD/662**	Brembo			
SPRINTER 3 /5-t Bus (906) - 311 CDI 4x4 (906.733 / 906.735)	02-08 /	**PD/662**	Brembo			
SPRINTER 3 /5-t Bus (906) - 311 CDI	06-06 /	**PD/662**	Brembo			
SPRINTER 3 /5-t Bus (906) - 313 CDI (906.633)	08-11 /	**PD/662**	Brembo			
SPRINTER 3 /5-t Bus (906) - 313 CDI 4x4 (906.633)	08-11 /	**PD/662**	Brembo			
SPRINTER 3 /5-t Bus (906) - 315 CDI 4x4 (906.733 / 906.735)	02-08 /	**PD/662**	Brembo			
SPRINTER 3 /5-t Bus (906) - 315 CDI	06-06 /	**PD/662**	Brembo			
SPRINTER 3 /5-t Bus (906) - 316 CDI 4x4	08-11 /	**PD/662**	Brembo			
SPRINTER 3 /5-t Bus (906) - 316 NGT (906.633 / 906.635)	09-08 /	**PD/662**	Brembo			
SPRINTER 3 /5-t Bus (906) - 316	09-08 /	**PD/662**	Brembo			
SPRINTER 3 /5-t Bus (906) - 318 CDI 4x4 (906.731 / 906.733 / 906.735)	02-08 /	**PD/662**	Brembo			
SPRINTER 3 /5-t Bus (906) - 318 CDI	02-08 /	**PD/662**				
SPRINTER 3 /5-t Bus (906) - 319 CDI 4x4	03-09 /	**PD/662**				
SPRINTER 3 /5-t Bus (906) - 319 CDI	03-09 /	**PD/662**				
SPRINTER 3 /5-t Bus (906) - 324	06-06 /	**PD/662**				
SPRINTER 308CDI / 311CDi / 313CDi / 314CDi / 316CDI	05-00 / 05-06	**PD/417-A**	Teves	**PD/659-A**	Teves	
SPRINTER 308CDI / 311CDi / 313CDi / 314CDi / 316CDI	05-00 / 05-06	**PD/417-A**	Teves	**PD/341-A**	Teves	
SPRINTER 308CDI / 311CDi / 313CDi / 314CDi / 316CDI	05-00 / 05-06	**PD/479**	Bosch	**PD/118-A**	Bosch	
SPRINTER 308D / 310D / 312D / 312D 4x4 / 314D	02-95 / 04-00	**PD/417-A**	Teves	**PD/659-A**	Teves	
SPRINTER 308D / 310D / 312D / 312D 4x4 / 314D	02-95 / 04-00	**PD/417-A**	Teves	**PD/341-A**	Teves	
SPRINTER 308D / 310D / 312D / 312D 4x4 / 314D	02-95 / 04-00	**PD/479**	Bosch	**PD/118-A**	Bosch	
SPRINTER 309 CDI MICROONIBUS	12 /	**PD/662**		**PD/663**		
SPRINTER 310 D	97 / 99	**PD/111** **PD/111-A**	Perrot	**MB/157** **MB/157-CP**		
SPRINTER 310 D	00 / 01	**PD/111** **PD/111-A**	Perrot	**PD/118**	Bosch	Freio de mão **MB/162-CP**
SPRINTER 310 D	00 / 01	**PD/417**	Teves	**PD/118**	Bosch	Freio de mão **MB/162-CP**
SPRINTER CHASSI 311 CDI STREET	12 /	**PD/662**		**PD/663**		
SPRINTER FURGÃO 311 CDI STREET	12 /	**PD/662**		**PD/663**		
SPRINTER 311 Cdi	02 /	**PD/111** **PD/111-A**	Perrot	**PD/341**	Teves	
SPRINTER 311 Cdi	02 /	**PD/417**	Teves	**PD/341**	Teves	
SPRINTER 312 D	00 / 01	**PD/111** **PD/111-A**	Perrot	**PD/118**	Bosch	Freio de mão **MB/162-CP**
SPRINTER 312 D	00 / 01	**PD/417**	Teves	**PD/118**	Bosch	Freio de mão **MB/162-CP**
SPRINTER 313 Cdi	02 /	**PD/111** **PD/111-A**	Perrot	**PD/341**	Teves	
SPRINTER 313 Cdi	02 /	**PD/417**	Teves	**PD/341**	Teves	

MODEL / *MODELO*	YEAR - *AÑO*	FRONT *DELANTERA*	SYSTEM *SISTEMA*	REAR *TRASERA*	SYSTEM *SISTEMA*	OBS.
MERCEDES-BENZ						
SPRINTER 316	03 / 06	**PD/111-A**		**PD/118**		
SPRINTER 316	03 / 06	**PD/111**		**PD/118**		
SPRINTER 408CDi / 411CDi / 413D / 414CDi / 416CDi - 4x2 / 4x4	05-00 / 05-06	**PD/111-A**	Wabco	**PD/111-A**	Wabco	
SPRINTER 408CDi / 411CDi / 413D / 414CDi / 416CDi - 4x2 / 4x4	05-00 / 05-06	**PD/479**	Bosch	**PD/118-A**	Bosch	
SPRINTER 408D / 410D / 412D / 414D - 4x2 / 4x4	02-95 / 04-00	**PD/111-A**	Wabco	**PD/111-A**	Wabco	
SPRINTER 412 D	99 / 02	**PD/111** **PD/111-A**	Perrot	**PD/111** **PD/111-A**	Perrot	
SPRINTER 413 Cdi	02 /	**PD/111** **PD/111-A**	Perrot	**PD/111** **PD/111-A**	Perrot	
SPRINTER CHASSI 415 CDI	12 /	**PD/662**		**PD/663**		
SPRINTER FURGÃO 415 CDI	12 /	**PD/662**		**PD/663**		
SPRINTER VAN 415 CDI	12 /	**PD/662**		**PD/663**		
SPRINTER VAN 415 CDI 15+1	12 /	**PD/662**		**PD/663**		
SPRINTER 416	03 / 06	**PD/111** **PD/111-A**		**PD/111** **PD/111-A**		
SPRINTER CHASSI 515 CDI	12 /	**PD/661**		**PD/664**		
SPRINTER FURGÃO 515 CDI	12 /	**PD/661**		**PD/664**		
SPRINTER VAN 515 CDI 17+1	12 /	**PD/661**		**PD/664**		
SPRINTER 2-t 208 D BUS / BOX / CHASSIS	02-95 / 04-00			**PD/1399**		
SPRINTER 2-t 212 D BUS / BOX / CHASSIS	02-95 / 04-00			**PD/1399**		
SPRINTER 2-t 214 BUS / BOX / CHASSIS	02-95 / 05-06			**PD/1399**		
SPRINTER 2-t 210 D BUS / BOX / CHASSIS	03-97 / 04-00			**PD/1399**		
SPRINTER 2-t 208 CDI BUS / BOX / CHASSIS	04-00 / 05-06			**PD/1399**		
SPRINTER 2-t 211 CDI BUS / BOX / CHASSIS	04-00 / 05-06			**PD/1399**		
SPRINTER 2-t 213 CDI BUS / BOX / CHASSIS	04-00 / 05-06			**PD/1399**		
SPRINTER 2-t 216 CDI BUS / BOX / CHASSIS	04-00 / 05-06			**PD/1399**		
SPRINTER 2-t 214 NGT BUS / BOX / CHASSIS	04-00 / 05-06			**PD/1399**		
SPRINTER 3-t Box (906) - 209 CDI	06-06 /	**PD/662**	Brembo			
SPRINTER 3-t Box (906) - 210 CDI	03-09 /	**PD/662**	Brembo			
SPRINTER 3-t Box (906) - 211 CDI	06-06 /	**PD/662**	Brembo			
SPRINTER 3-t Box (906) - 213 CDI	06-06 /	**PD/662**	Brembo			
SPRINTER 3-t Box (906) - 215 CDI	06-06 /	**PD/662**	Brembo			
SPRINTER 3-t Box (906) - 216 (906.613)	09-08 /	**PD/662**	Brembo			
SPRINTER 3-t Box (906) - 216 CDI	03-09 /	**PD/662**	Brembo			
SPRINTER 3-t Box (906) - 218 CDI	06-06 /	**PD/662**	Brembo			
SPRINTER 3-t Box (906) - 219 CDI (906.611 / 906.613)	03-09 /	**PD/662**	Brembo			
SPRINTER 3-t Box (906) - 224	06-06 /	**PD/662**	Brembo			
SPRINTER 3-t Bus (906) - 210 CDI	03-09 /	**PD/662**	Brembo			
SPRINTER 3-t Bus (906) - 211 CDI	06-06 /	**PD/662**	Brembo			
SPRINTER 3-t Bus (906) - 215 CDI	06-06 /	**PD/662**	Brembo			
SPRINTER 3-t Bus (906) - 216	09-08 /	**PD/662**	Brembo			
SPRINTER 3-t Bus (906) - 224	06-06 /	**PD/662**	Brembo			
SPRINTER 3-t Platform/Chassis (906) - 209 CDI	06-06 /	**PD/662**	Brembo			
SPRINTER 3-t Platform/Chassis (906) - 210 CDI	03-09 /	**PD/662**	Brembo			
SPRINTER 3-t Platform/Chassis (906) - 211 CDI	06-06 /	**PD/662**	Brembo			
SPRINTER 3-t Platform/Chassis (906) - 213 CDI	03-09 /	**PD/662**	Brembo			
SPRINTER 3-t Platform/Chassis (906) - 213 CDI	03-09 /	**PD/662**	Brembo			
SPRINTER 3-t Platform/Chassis (906) - 215 CDI	06-06 /	**PD/662**	Brembo			
SPRINTER 3-t Platform/Chassis (906) - 216 (906.113 / 906.213)	09-08 /	**PD/662**	Brembo			
SPRINTER 3-t Platform/Chassis (906) - 216 CDI	03-09 /	**PD/662**	Brembo			
SPRINTER 3-t Platform/Chassis (906) - 218 CDI	06-06 /	**PD/662**	Brembo			
SPRINTER 3-t Platform/Chassis (906) - 219 CDI (906.211 / 906.213)	03-09 /	**PD/662**	Brembo			
SPRINTER 3-t Platform/Chassis (906) - 224	06-06 /	**PD/662**	Brembo			

MODEL / *MODELO*	YEAR - *AÑO*	FRONT *DELANTERA*	SYSTEM *SISTEMA*	REAR *TRASERA*	SYSTEM *SISTEMA*	OBS.
MERCEDES-BENZ						
SPRINTER 3-t 308 CDI BOX / BUS / CHASSIS	04-00 / 05-06			**PD/1399**		
SPRINTER 3-t 308 D BUS	02-95 / 04-00			**PD/1399**		
SPRINTER 3-t 308 D 2.3 BOX / BUS / CHASSIS	02-95 / 04-00			**PD/1399**		
SPRINTER 3-t 308 E BUS	04-00 / 05-06			**PD/1399**		
SPRINTER 3-t 310 D 2.9 BOX / BUS / CHASSIS	01-97 / 04-00			**PD/1399**		
SPRINTER 3-t 310 D 4x4 BUS	05-97 / 08-02			**PD/1399**		
SPRINTER 3-t 311 CDI BOX / BUS / CHASSIS	04-00 / 05-06			**PD/1399**		
SPRINTER 3-t 311 CDI 4x4 BOX / BUS / CHASSIS	08-02 / 05-06			**PD/1399**		
SPRINTER 3-t 312 D 2.9 BOX / BUS / CHASSIS	02-95 / 04-00			**PD/1399**		
SPRINTER 3-t 312 D 2.9 4x4 BOX / BUS	05-97 / 08-02			**PD/1399**		
SPRINTER 3-t 313 CDI BOX / BUS / CHASSIS	04-00 / 05-06			**PD/1399**		
SPRINTER 3-t 313 CDI 4x4 BOX / BUS / CHASSIS	08-02 / 05-06			**PD/1399**		
SPRINTER 3-t 314 BOX / BUS / CHASSIS	02-95 / 05-96			**PD/1399**		
SPRINTER 3-t 314 4x4 BOX / BUS / CHASSIS	08-02 / 05-06			**PD/1399**		
SPRINTER 3-t 314 NGT BOX / BUS / CHASSIS	04-00 / 05-06			**PD/1399**		
SPRINTER 3-t 316 CDI BOX / BUS / CHASSIS	04-00 / 05-06			**PD/1399**		
SPRINTER 3-t 316 CDI 4x4 BOX / BUS / CHASSIS	08-02 / 05-06			**PD/1399**		
SPRINTER 4-t 414 BOX / BUS / CHASSIS	02-96 / 05-06			**PD/1399**		
SPRINTER 4-t 408 CDI BOX / BUS / CHASSIS	04-00 / 05-06			**PD/1399**		
SPRINTER 4-t 411 CDI BOX / BUS / CHASSIS	04-00 / 05-06			**PD/1399**		
SPRINTER 4-t 413 CDI BOX / BUS / CHASSIS	04-00 / 05-06			**PD/1399**		
SPRINTER 4-t 416 CDI BOX / BUS / CHASSIS	04-00 / 05-06			**PD/1399**		
SPRINTER 4-t 14 4x4 BOX / CHASSIS	05-97 / 05-06			**PD/1399**		
SPRINTER 4-t 411 CDI 4x4 BOX / CHASSIS	04-00 / 05-06			**PD/1399**		
SPRINTER 4-t 413 CDI 4x4 BOX / CHASSIS	04-00 / 05-06			**PD/1399**		
SPRINTER 4-t 416 CDI 4x4 BOX / CHASSIS	04-00 / 05-06			**PD/1399**		
SPRINTER 4-t 408 D BOX / CHASSIS	02-96 / 05-96			**PD/1399**		
SPRINTER 4-t 410 D BOX / CHASSIS	02-96 / 05-96			**PD/1399**		
SPRINTER 4-t 410 D 4x4 BOX / CHASSIS	05-97 / 05-06			**PD/1399**		
SPRINTER 4-t 412 D BOX / CHASSIS	02-96 / 05-96			**PD/1399**		
SPRINTER 4-t 412 D 4x4 BOX / CHASSIS	05-97 / 05-06			**PD/1399**		
SPRINTER 4-t 412 D BOX / CHASSIS	02-96 / 05-96			**PD/1399**		
SPRINTER 4-t 412 D 4x4 BOX / CHASSIS	05-97 / 05-06			**PD/1399**		
T2 - SERIES 5,6,7,8 ton SERIES	86 /	**PD/104**	Teves			
TOURINO	03 /	**PD/120**	Knorr	**PD/120**	Knorr	
TOURISMO (O 340 / O350)	92 /	**PD/125**	Meritor	**PD/125**	Meritor	
TOURISMO (O 340 / O350)	92 /	**PD/125 (30mm)**	Meritor	**PD/125 (30mm)**	Meritor	
TOURISMO 15 RHD / 15 SHD	00 /	**PD/116**	Knorr	**PD/116**	Knorr	
TRAVEGO 15 RH / 15 RHD / 17 RHD (O 580)	00 /	**PD/116**	Knorr	**PD/116**	Knorr	
VARIO 8 ton SERIES	96 /	**PD/104**	Teves	**PD/104**	Teves	
VIANO (Bus/van)	09-03 /	**PD/1094-A**		**PD/1095-A**		
VIANO (W639) - 3 / 0	09-03 /	**PD/662**	Brembo			
VIANO (W639) - 3.2	09-03 /	**PD/662**	Brembo			
VIANO (W639) - 3.5	09-07 /	**PD/662**	Brembo			
VIANO (W639) - 3.7	06-04 /	**PD/662**	Brembo			
VIANO (W639) - CDI 2.0 4-matic	07-05 /	**PD/662**	Brembo			
VIANO (W639) - CDI 2.0 4-matic	07-05 /	**PD/662**	Brembo			
VIANO (W639) - CDI 2.0	09-03 /	**PD/662**	Brembo			
VIANO (W639) - CDI 2.0	07-10 /	**PD/662**	Brembo			
VIANO (W639) - CDI 2.2 4-matic	07-05 /	**PD/662**	Brembo			
VIANO (W639) - CDI 2.2 4-matic	07-10 /	**PD/662**	Brembo			
VIANO (W639) - CDI 2.2	09-03 /	**PD/662**	Brembo			
VIANO (W639) - CDI 2.2	07-10 /	**PD/662**	Brembo			

MODEL / *MODELO*	YEAR - *AÑO*	FRONT *DELANTERA*	SYSTEM *SISTEMA*	REAR *TRASERA*	SYSTEM *SISTEMA*	OBS.
MERCEDES-BENZ						
VIANO (W639) - CDI 3.0	03-06 /	**PD/662**	Brembo			
VIANO (W639) - CDI 3.0	07-10 /	**PD/662**	Brembo			
VIANO (W639) - CDI	09-03 /	**PD/662**	Brembo			
VIANO (W639) - CDI	03-06 /	**PD/662**	Brembo			
VIANO 2.2 Cdi	99 /	**PD/417**	Teves	**PD/425-A**		
VIANO 2.3 D / 2.3 TD	95 /	**PD/417**	Teves	**PD/425-A**		
VITO (Bus/van)	09-03 /	**PD/1094-A**		**PD/1095-A**		
VITO / MIXTO Box (W639) - 109 CDI	09-03 /	**PD/662**	Brembo			
VITO / MIXTO Box (W639) - 109 CDi	08-06 /	**PD/662**	Brembo		Teves	
VITO / MIXTO Box (W639) - 110 CDI	09-10 /	**PD/662**	Brembo		Teves	
VITO / MIXTO Box (W639) - 111 CDI 4x4	09-07 /	**PD/662**	Brembo			
VITO / MIXTO Box (W639) - 111 CDI	09-03 /	**PD/662**	Brembo			
VITO / MIXTO Box (W639) - 111 CDI	09-07 /	**PD/662**	Brembo			
VITO / MIXTO Box (W639) - 113 CDI	09-10 /	**PD/662**	Brembo			
VITO / MIXTO Box (W639) - 115 CDI 4x4	09-07 /	**PD/662**	Brembo			
VITO / MIXTO Box (W639) - 115 CDI	09-03 /	**PD/662**	Brembo			
VITO / MIXTO Box (W639) - 116 CDI	09-10 /	**PD/662**	Brembo			
VITO / MIXTO Box (W639) - 119	09-03 /	**PD/662**	Brembo			
VITO / MIXTO Box (W639) - 120 CDI	09-07 /	**PD/662**	Brembo			
VITO / MIXTO Box (W639) - 122 CDI	09-10 /	**PD/662**	Brembo			
VITO / MIXTO Box (W639) - 122	09-03 /	**PD/662**	Brembo			
VITO / MIXTO Box (W639) - 123 (639.603)	06-04 / 07-08	**PD/662**	Brembo			
VITO / MIXTO Box (W639) - 126	09-07 /	**PD/662**	Brembo			
VITO 108D / 110D / 113 / 114	95 / 97	**PD/417-A**	Teves			
VITO 108D / 110D / 113 / 114	98 /	**PD/479**	Bosch			
VITO 2.2 CDi / 2.3 Cdi	99 /	**PD/479**	Bosch			
VITO 2.3 TD	98 /	**PD/479**	Bosch			
VITO 110 TD 2.3	02-96 / 08-03			**P-657-A**	Teves	
VITO 113 2.0	02-96 / 08-03			**P-657-A**	Teves	
VITO 114 2.3i	02-96 / 08-03			**P-657-A**	Teves	
VITO BUS 108 D23	02-96 / 08-03			**P-657-A**	Teves	
VITO Bus (W639) - 109 CDI 4x4	09-07 /	**PD/662**	Brembo			
VITO Bus (W639) - 109 CDI	09-03 /	**PD/662**	Brembo			
VITO Bus (W639) - 109 CDI	09-06 /	**PD/662**	Brembo			
VITO Bus (W639) - 110 CDI	09-10 /	**PD/662**	Brembo			
VITO Bus (W639) - 111 CDI 4x4	09-07 /	**PD/662**	Brembo			
VITO Bus (W639) - 111 CDI	09-03 /	**PD/662**	Brembo			
VITO Bus (W639) - 111 CDI	09-07 /	**PD/662**	Brembo			
VITO Bus (W639) - 113 CDI 4x4	09-10 /	**PD/662**	Brembo			
VITO Bus (W639) - 113 CDI	09-10 /	**PD/662**	Brembo			
VITO Bus (W639) - 115 CDI 4x4	09-07 /	**PD/662**	Brembo			
VITO Bus (W639) - 115 CDI	09-03 /	**PD/662**	Brembo			
VITO Bus (W639) - 116 CDI 4x4	09-10 /	**PD/662**	Brembo			
VITO Bus (W639) - 116 CDI	09-10 /	**PD/662**	Brembo			
VITO Bus (W639) - 119	09-03 /	**PD/662**	Brembo			
VITO Bus (W639) - 120 CDI	09-07 /	**PD/662**	Brembo			
VITO Bus (W639) - 122 CDI	09-10 /	**PD/662**	Brembo			
VITO Bus (W639) - 122	09-03 /	**PD/662**	Brembo			
VITO Bus (W639) - 123	06-04 /	**PD/662**	Brembo	**15836 00**		
VITO Bus (W639) - 126	09-07 /	**PD/662**	Brembo	**15836 20**		
V-CLASS V230-TD, V230	09-96 /			**P-657-A**	Teves	
MERCEDES-BENZ TRUCKS						
709	03-84 / 06-87	**15836 00**		**15836 00**		
709	07-87 /	**15836 20**		**15836 20**		

MODEL / *MODELO*	YEAR - *AÑO*	FRONT *DELANTERA*	SYSTEM *SISTEMA*	REAR *TRASERA*	SYSTEM *SISTEMA*	OBS.
MERCEDES-BENZ TRUCKS						
711	03-84 / 06-87	**15836 00**		**15836 00**		
711	07-87 /	**15836 20**		**15836 20**		
917	98 /	**17949/950 20**		**17949/950 20**		AWD + Dumper
923	98 /	**17949/950 20**		**17949/950 20**		AWD + Dumper
925	98 /	**17949/950 20**		**17949/950 20**		AWD + Dumper
1017	98 /	**17949/950 20**		**17949/950 20**		AWD + Dumper
1023	98 /	**17949/950 20**		**17949/950 20**		AWD + Dumper
1214	94 /	**19844/845 20**		**19844/845 20**		
1215	98 /	**19494 00**		**19505 20**		AWD
1215	98 /	**19494 00**		**19844/845 20**		Dumper
1217	98 /	**19494 00**		**19505 20**		AWD
1217	98 /	**19494 00**		**19844/845 20**		Dumper
1220	94 /	**19844/845 20**		**19844/845 20**		
1223	98 /	**19494 00**		**19505 20**		AWD
1223	98 /	**19494 00**		**19844/845 20**		Dumper
1224	94 /	**19844/845 20**		**19844/845 20**		
1225	98 /	**19494 00**		**19505 20**		AWD
1225	98 /	**19494 00**		**19844/845 20**		Dumper
1228	98 /	**19494 00**		**19505 20**		AWD
1228	98 /	**19494 00**		**19844/845 20**		Dumper
1317	98 /	**19494 00**		**19505 20**		AWD
1317	98 /	**19494 00**		**19844/845 20**		Dumper
1323	98 /	**19494 00**		**19505 20**		AWD
1323	98 /	**19494 00**		**19844/845 20**		Dumper
1325	98 /	**19494 00**		**19505 20**		AWD
1325	98 /	**19494 00**		**19844/845 20**		Dumper
1328	98 /	**19494 00**		**19505 20**		AWD
1328	98 /	**19494 00**		**19844/845 20**		Dumper
1422	02-93 / 08-94	**19494 00**		**19494 00**		
1517	98 /	**19494 00**		**19505 20**		AWD
1517	98 /	**19494 00**		**19844/845 20**		Dumper
1523	98 /	**19494 00**		**19505 20**		AWD
1523	98 /	**19494 00**		**19844/845 20**		Dumper
1528	98 /	**19494 00**		**19505 20**		AWD
1528	98 /	**19494 00**		**19844/845 20**		Dumper
1614	91 /	**19505 20**		**19505 20**		
1617	91 /	**19505 20**		**19505 20**		
1823	98 /	**19495 00**		**19496 00**		AWD + Dumper
1828	05-98 /	**19495 00**		**19496 00**		AWD + Dumper
1831	09-96 /	**19495 00**		**19496 00**		AWD + Dumper
1835	09-96 /	**19495 00**		**19496 00**		AWD + Dumper
1840	09-96 /	**19495 00**		**19496 00**		AWD + Dumper
1843	09-96 /	**19495 00**		**19496 00**		AWD + Dumper
1848	09-96 /	**19495 00**		**19496 00**		AWD + Dumper
1853	09-96 /	**19495 00**		**19496 00**		AWD + Dumper
1857	04-97 /	**19495 00**		**19496 00**		AWD + Dumper
1922	10-81 / 10-90	**19494 00**		**19495 00**		
1948	09-88 / 07-92	**19496 00**		**19496 00**		
2031	09-96 /	**19495 00**		**19496 00**		AWD + Dumper
2035	04-97 /	**19495 00**		**19496 00**		AWD + Dumper
2040	09-96 /	**19495 00**		**19496 00**		AWD + Dumper
2053	04-96 /	**19495 00**		**19496 00**		AWD + Dumper
2225	04-85 / 03-91	**19494 00**		**17238 00**		
2236	09-82 / 03-91	**19494 00**		**19495 00**		

MODEL / *MODELO*	YEAR - *AÑO*	FRONT *DELANTERA*	SYSTEM *SISTEMA*	REAR *TRASERA*	SYSTEM *SISTEMA*	OBS.
MERCEDES-BENZ TRUCKS						
2523	05-98 /	**19495 00**		**19496 00**		AWD + Dumper
2528	05-98 /	**19495 00**		**19496 00**		AWD + Dumper
2531	09-96 /	**19495 00**		**19496 00**		AWD + Dumper
2535	09-96 /	**19495 00**		**19496 00**		AWD + Dumper
2540	09-96 /	**19495 00**		**19496 00**		AWD + Dumper
2543	09-96 /	**19495 00**		**19496 00**		AWD + Dumper
2548	09-96 /	**19495 00**		**19496 00**		AWD + Dumper
2553	09-96 /	**19495 00**		**19496 00**		AWD + Dumper
2557	09-96 /	**19495 00**		**19496 00**		AWD + Dumper
2628	05-98 /	**19495 00**		**19496 00**		AWD + Dumper
2631	04-97 /	**19495 00**		**19496 00**		AWD + Dumper
2635	04-97 /	**19495 00**		**19496 00**		AWD + Dumper
2640	09-96 /	**19495 00**		**19496 00**		AWD + Dumper
2643	04-97 /	**19495 00**		**19496 00**		AWD + Dumper
2648	09-96 /	**19495 00**		**19496 00**		AWD + Dumper
2653	09-96 /	**19495 00**		**19496 00**		AWD + Dumper
2657	04-97 /	**19495 00**		**19496 00**		AWD + Dumper
3229	09-89 / 08-94	**19495 00**		**19495 00**		
3231	04-97 /	**19495 00**		**19496 00**		
3235	04-97 /	**19495 00**		**19496 00**		
3235	10-88 / 07-92	**19495 00**		**19495 00**		
3238	10-90 /	**19495 00**		**19495 00**		
3240	04-97 /	**19495 00**		**19496 00**		
3243	04-97 /	**19495 00**		**19496 00**		
3253	01-96 /	**19495 00**		**19495 00**		
3331	04-97 /	**19495 00**		**19496 00**		AWD + Dumper
3335	04-97 /	**19495 00**		**19496 00**		AWD + Dumper
3340	04-97 /	**19495 00**		**19496 00**		AWD + Dumper
3343	04-97 /	**19495 00**		**19496 00**		AWD + Dumper
3348	04-97 /	**19495 00**		**19496 00**		AWD + Dumper
3353	04-97 /	**19495 00**		**19496 00**		AWD + Dumper
3357	04-97 /	**19495 00**		**19496 00**		AWD + Dumper
4140	04-97 /	**19495 00**		**19496 00**		
4143	04-97 /	**19495 00**		**19496 00**		
4148	04-97 /	**19495 00**		**19496 00**		
1013 A / AK / KO	02-76 / 86	**17682 00**		**17682 00**		
1017 A	76 / 02-91	**17682 00**		**17682 00**		
1017 AK	02-76 / 84	**17682 00**		**17682 00**		
1017 AS	04-77 / 09-85	**17682 00**		**17682 00**		
1017 KO / F	76 / 09-85	**17682 00**		**17682 00**		
1017 AF	76 / 09-85	**17682 00**		**17682 00**		
1019 F / AF	76 / 86	**17682 00**		**17682 00**		
1114 AK	02-87 /	**19844/845 00**		**19844/845 00**		
1114 O / LO	86 /	**19844/845 00**		**19844/845 00**		
1114 L / K / S	03-84 /	**19844/845 00**		**19844/845 00**		
1117 A	06-87 /	**19844/845 00**		**19844/845 00**		
1117 LO	03-96 /	**19844/845 20**		**19844/845 20**		
1117 O / LO	03-84 /	**19844/845 00**		**19844/845 00**		
1117 S / LS	03-84 /	**19844/845 00**		**19844/845 00**		
1117 L / K	04-84 /	**19844/845 00**		**19844/845 00**		
1117 L / K / S	03-96 /	**19844/845 20**		**19844/845 20**		
1120 AF	02-87 /	**19844/845 00**		**19844/845 00**		
1120 F	02-90 /	**19844/845 20**		**19844/845 20**		
1120 L	08-84 /	**19844/845 00**		**19844/845 00**		

MODEL / *MODELO*	YEAR - *AÑO*	FRONT *DELANTERA*	SYSTEM *SISTEMA*	REAR *TRASERA*	SYSTEM *SISTEMA*	OBS.
MERCEDES-BENZ TRUCKS						
1120 O / LO	02-92 /	**19844/845 20**		**19844/845 20**		
1120 S / LS	08-84 /	**19844/845 00**		**19844/845 00**		
1120 L	06-84 /	**19844/845 00**		**19844/845 00**		
1124 AF / F	03-92 /	**19844/845 20**		**19844/845 20**		
1213 AKO / K / AK	09-75 / 05-86	**17682 00**		**17682 00**		
1213 A / S / AS / KO	09-75 / 05-76	**17682 00**		**17682 00**		
1214 A	86 / 88	**17238 00**		**17238 00**		
1217 CA	83 / 88	**17238 00**		**17238 00**		
1217 KO	03-94 /	**19844/845 20**		**19844/845 20**		
1217 KO / K / AK	09-75 / 09-85	**17682 00**		**17682 00**		
1217 L / A / S / LS / AS	09-75 / 09-85	**17682 00**		**17682 00**		
1219 A	09-75 / 82	**17238 00**		**17238 00**		
1219 AK	09-75 / 84	**17238 00**		**17238 00**		
1219 S / F / AF / K	09-75 / 09-84	**17238 00**		**17238 00**		
1222 A	05-82 / 10-90	**17238 00**		**17238 00**		
1222 F / AF	05-82 / 91	**17682 00**		**17238 00**		
1222 S	07-82 / 02-90	**17682 00**		**17238 00**		
1225 AF	83 / 88	**17238 00**		**17238 00**		
1314 AK	06-87 /	**19844/845 00**		**19844/845 00**		
1314 K / KO	07-84 /	**19844/845 00**		**19844/845 00**		
1317 AK	04-84 /	**19844/845 00**		**19844/845 00**		
1317 AK	93 /	**19844/845 20**		**19844/845 20**		
1317 K	07-84 /	**19844/845 00**		**19844/845 00**		
1317 KO	03-94 /	**19844/845 20**		**19844/845 20**		
1317 S	03-96 /	**19844/845 20**		**19844/845 20**		
1317 / 1319 LP / LPK / LPS	71 / 83			**17105 00**		
1317 L / K	03-96 /	**19844/845 20**		**19844/845 20**		
1317 L / S / LS	08-84 /	**19844/845 00**		**19844/845 00**		
1320 L	93 /	**19844/845 20**		**19844/845 20**		
1320 L / S / LS	10-84 /	**19844/845 00**		**19844/845 00**		
1324 L / S / LS	91 /	**19844/845 20**		**19844/845 20**		
1414 K	04-84 / 03-91	**17238 00**		**17238 00**		
1417 A / AK	09-89 /	**19494 00**		**19494 00**		
1417 C / CA / CK / CAK	04-84 / 03-91	**17238 00**		**17238 00**		
1417 K	07-89 /	**19494 00**		**19494 00**		
1419 C / CL	05-83 / 06-85	**17238 00**		**17238 00**		
1420 L	07-85 / 03-91	**17238 00**		**17238 00**		
1420 L / LS	02-90 /	**19494 00**		**19494 00**		
1422 E	02-93 / 08-94	**19494 00**		**19494 00**		
1422 F	07-89 / 09-93	**19494 00**		**19494 00**		
1422 LS	02-93 / 08-94	**19494 00**		**19494 00**		
1422 L / S / LS	06-89 / 08-94	**19494 00**		**19494 00**		
1422 L / S / LS / F	05-82 / 10-90	**17238 00**		**17238 00**		
1424 L / S / LS	02-93 /	**19494 00**		**19494 00**		
1425 S / LS	11-82 / 03-91	**17238 00**		**17238 00**		
1426 S / LS	06-89 / 09-93	**19494 00**		**19494 00**		
1427 F	02-93 /	**19494 00**		**19494 00**		
1513 L / LA / LAK / LB / LK / LP	67 / 87	**17105 00**				
1514 K L	89 /	**19505 20**		**19505 20**		
1517 K	89 /	**19505 20**		**19505 20**		
1517 L	10-88 /	**19505 20**		**19505 20**		
1517 L / K	03-96 /	**19505 20**		**19505 20**		
1519 L / LA / LP	71 /	**17105 00**				
1520 L	89 /	**19505 20**		**19505 20**		

MODEL / *MODELO*	YEAR - *AÑO*	FRONT *DELANTERA*	SYSTEM *SISTEMA*	REAR *TRASERA*	SYSTEM *SISTEMA*	OBS.
MERCEDES-BENZ TRUCKS						
1524 L	02-91 /	**19505 20**		**19505 20**		
1525 AF	98 /	**19494 00**		**19505 20**		AWD
1525 AF	98 /	**19494 00**		**19844/845 20**		Dumper
1614 / K	04-84 / 03-91	**19494 00**		**19494 00**		
1617 C / CL / CS / CK / CAK	04-84 / 03-91	**17238 00**		**19494 00**		
1617 C / S / K / L	89 / 91	**19494 00**		**19494 00**		
1619 C / CL	06-83 / 06-85	**17238 00**		**19494 00**		
1620 L	07-85 / 03-91	**19494 00**		**19494 00**		
1622 K / AK	05-82 / 10-89	**19494 00**		**19494 00**		
1622 S	05-82 / 03-91	**19494 00**		**19494 00**		
1622 L	05-82 / 03-91	**19494 00**		**19494 00**		
1625 AK	10-80 / 11-89	**17238 00**		**19494 00**		
1625 K	06-80 / 11-89	**19494 00**		**19495 00**		
1625 L / S / LS	05-80 / 10-89	**19494 00**		**19495 00**		
1628 A	80 / 05-89	**19494 00**		**19494 00**		
1628 L / S / LS	80 / 05-89	**19494 00**		**19495 00**		rear optinal 19494 00
1633 L / S / LS	10-80 / 05-87	**19494 00**		**19495 00**		rear optinal 19494 00
1635 L / S / LS / K	02-86 / 07-89	**19494 00**		**19495 00**		rear optinal 19494 00
1636 L / S / LS	84 / 03-91	**19494 00**		**19495 00**		rear optinal 19494 00
1638 S / LS	11-80 / 86	**19494 00**		**19495 00**		rear optinal 19494 00
1644 S / LS	06-86 / 08-89	**19494 00**		**19495 00**		rear optinal 19494 00
1717 AK	09-89 / 08-94	**19494 00**		**19496 00**		
1717 L / K	09-89 / 08-94	**19495 00**		**19496 00**		
1720 S	02-90 / 08-94	**19495 00**		**19496 00**		
1720 L	02-90 /	**19495 00**		**19496 00**		
1722 AK	12-88 / 08-94	**19494 00**		**19496 00**		
1722 L / S / K	12-88 / 08-94	**19495 00**		**19496 00**		
1726 AK	06-89 / 08-94	**19494 00**		**19496 00**		
1726 L / S LS / K	12-88 / 08-94	**19495 00**		**19496 00**		
1729 AK	07-88 / 09-93	**19494 00**		**19496 00**		
1729 L / S LS / K	07-88 / 08-94	**19495 00**		**19496 00**		
1733 L / S LS	01-89 / 07-92	**19495 00**		**19496 00**		
1735 AK	08-89 / 08-94	**19494 00**		**19496 00**		
1735 L / S LS / K	07-88 / 08-94	**19495 00**		**19496 00**		
1748 L / S LS	07-88 / 07-92	**19495 00**		**19496 00**		
1813 6x2 / 6x4 / 1819 L 6x4	71 / 89			**17105 00**		
1820 AK	07-93 /	**19494 00**		**19496 00**		
1820 S	05-92 /	**19495 00**		**19496 00**		
1820 L	01-91 /	**19495 00**		**19496 00**		
1824 AK	01-94 /	**19494 00**		**19496 00**		
1824 K	08-92 /	**19494 00**		**19496 00**		
1824 L	08-92 /	**19495 00**		**19496 00**		
1827 L / S LS	12-90 /	**19495 00**		**19496 00**		
1831 AK	05-91 /	**19494 00**		**19496 00**		
1831 K	07-92 /	**19494 00**		**19496 00**		
1831 L / S LS	12-90 /	**19495 00**		**19496 00**		
1834 L / S LS	01-91 /	**19495 00**		**19496 00**		
1838 AK	12-92 /	**19494 00**		**19496 00**		
1838 K	12-90 /	**19494 00**		**19496 00**		
1838 K	06-95 /	**19494 00**		**19496 00**		
1838 L / S LS	12-90 /	**19495 00**		**19496 00**		
1840 LS	07-91 / 07-92	**19495 00**		**19496 00**		
1844 L / S LS	11-91 /	**19495 00**		**19496 00**		
1850 L / S LS	12-90 /	**19495 00**		**19496 00**		

MODEL / *MODELO*	YEAR - *AÑO*	FRONT *DELANTERA*	SYSTEM *SISTEMA*	REAR *TRASERA*	SYSTEM *SISTEMA*	OBS.
MERCEDES-BENZ TRUCKS						
1853 AK	01-96 /	**19494 00**		**19496 00**		
1853 L / S LS	12-96 /	**19495 00**		**19496 00**		
1922 AK	08-89 / 08-94	**19494 00**		**19496 00**		
1922 S / K / AK	10-81 / 03-91	**19494 00**		**19495 00**		
1922 S / K	05-89 / 08-94	**19496 00**		**19496 00**		
1928 A / S / LS / AS / K / AK	80 / 03-91	**19494 00**		**19495 00**		
1928 L	80 / 05-89	**19494 00**		**19495 00**		
1929 A / AS / AK	07-88 / 08-94	**19494 00**		**19496 00**		
1929 L / S / K	07-88 / 08-94	**19496 00**		**19496 00**		
1933 S / LS	11-80 / 03-91	**19494 00**		**19495 00**		
1935 AK	09-87 / 03-91	**19494 00**		**19495 00**		
1935 AS / AK	05-89 / 08-94	**19494 00**		**19496 00**		
1935 S / K	05-89 / 08-94	**19496 00**		**19496 00**		
1935 S / LS	86 / 09-89	**19494 00**		**19495 00**		
1936 S / LS / AS / K / AK	10-81 / 03-91	**19494 00**		**19495 00**		
1938 S / LS	11-80 / 06-90	**19494 00**		**19495 00**		
1944 S / LS	10-85 / 89	**19494 00**		**19495 00**		
2024 K / AK	02-93 /	**19494 00**		**19495 00**		
2025 S	08-83 / 03-91	**19494 00**		**19495 00**		
2028 A (6x6)	80 / 91	**19494 00**		**19494 00**		19494 00 2nd rear axle
2028 LS	80 / 06-89	**19494 00**		**19495 00**		
2031 A / S / AS	03-92 /	**19494 00**		**19495 00**		
2033 LS	82 / 05-87	**19494 00**		**19495 00**		
2035 S / LS	06-86 / 07-89	**19494 00**		**19495 00**		
2036 LS	03-84 / 03-91	**19494 00**		**19495 00**		
2038 S / AS	11-91 /	**19494 00**		**19495 00**		
2044 S	01-92 /	**19494 00**		**19495 00**		
2050 S	01-91 /	**19494 00**		**19495 00**		
2219 C / CL	83 / 09-85	**19494 00**		**19494 00**		17238 00 auxiliar axle
2219 / L / K / KO	06-76 / 86	**19494 00**		**19494 00**		
2220 6x2/4	75 / 84	**19494 00**		**19494 00**		19494 00 2nd rear axle
2220 L 6x2/4	89 /	**19494 00**		**19495 00**		19494 00 2nd front axle
2220 L	/ 88	**19494 00**		**19494 00**		17238 00 auxiliar axle
2220 / L	07-85 / 03-91	**19494 00**		**19495 00**		
2222 6x2/4	75 / 84	**19494 00**		**19494 00**		19494 00 2nd rear axle
2222 B / K	05-82 / 03-91	**19494 00**		**17238 00**		
2222 / L	05-82 / 03-91	**19494 00**		**19494 00**		17238 00 auxiliar axle
2225 B	08-83 / 03-91	**19494 00**		**17238 00**		
2228 / L	78 / 03-91	**19494 00**		**19495 00**		
2228 / S	78 / 03-91	**19494 00**		**19494 00**		
2232 L 6x2	80 / 86	**19494 00**		**19495 00**		19494 00 auxiliar axle
2233 / L	81 / 05-87	**19494 00**		**19495 00**		
2233 / S	11-80 / 05-87	**19494 00**		**19494 00**		
2235 K	03-86 / 07-89	**19494 00**		**19494 00**		
2235 / L / S / LS	03-86 / 07-89	**19494 00**		**19495 00**		
2236 S	85 / 03-91	**19494 00**		**19494 00**		
2238 S	81 / 86	**19494 00**		**19494 00**		
2238 / L	81 / 86	**19494 00**		**19495 00**		
2244 S	10-85 / 07-89	**19494 00**		**19494 00**		
2244 / L	10-85 / 07-89	**19494 00**		**19495 00**		
2419 K 6x4	75 /	**19494 00**		**17238 00**		17238 00 2nd rear axle
2420 L 6x2/2/4	02-90 / 08-94	**19495 00**		**19496 00**		19495 00 auxiliary axle
2421 K 6x4	82 /	**19494 00**		**17238 00**		17238 00 2nd rear axle
2422 K / B	09-89 / 08-94	**19495 00**		**19495 00**		

MODEL / *MODELO*	YEAR - *AÑO*	FRONT *DELANTERA*	SYSTEM *SISTEMA*	REAR *TRASERA*	SYSTEM *SISTEMA*	OBS.
MERCEDES-BENZ TRUCKS						
2422 L 6x2/2/4	09-89 / 08-94	**19495 00**		**19496 00**		19495 00 auxiliary axle
2426 L 6x2/4	02-90 / 08-94	**19495 00**		**19496 00**		19495 00 auxiliary axle
2426 B	01-90 / 08-94	**19495 00**		**19495 00**		
2429 S / LS 6x2/4	07-88 / 08-94	**19495 00**		**19496 00**		19495 00 auxiliary axle
2429 L 6x2	07-88 / 08-94	**19495 00**		**19496 00**		19494 00 auxiliary axle
2429 S / K	07-88 / 08-94	**19495 00**		**19495 00**		
2433 K	09-89 / 07-92	**19495 00**		**19495 00**		
2433 S / LS 6x2/4	05-89 / 07-92	**19495 00**		**19496 00**		19495 00 auxiliary axle
2433 L 6x2	05-89 / 07-92	**19495 00**		**19496 00**		19494 00 auxiliary axle
2435 S / LS 6x2/2/4	07-88 / 08-94	**19495 00**		**19496 00**		19495 00 auxiliary axle
2435 L 6x2	07-88 / 08-94	**19495 00**		**19496 00**		19494 00 auxiliary axle
2435 S / K	07-88 / 08-94	**19495 00**		**19495 00**		
2448 LS 6x2/4	07-88 / 07-92	**19495 00**		**19496 00**		19495 00 auxiliary axle
2448 S	07-88 / 07-92	**19495 00**		**19495 00**		
2448 L 6x2	07-88 / 07-92	**19495 00**		**19496 00**		19494 00 auxiliary axle
2524 K 6x4	06-92 /	**19495 00**		**19495 00**		
2524 L 6x2/2/4	06-92 /	**19495 00**		**19496 00**		19495 00 auxiliary axle
2527 B 6x4	03-91 /	**19495 00**		**19495 00**		
2527 L 6x2/4	09-92 /	**19495 00**		**19496 00**		19495 00 auxiliary axle
2527 K 6x4	10-93 /	**19495 00**		**19495 00**		
2531 L 6x2/2/4	12-90 /	**19495 00**		**19496 00**		19495 00 auxiliary axle
2534 K 6x4	01-91 /	**19495 00**		**19495 00**		
2534 S / LS 6x2/4	01-91 /	**19495 00**		**19496 00**		19495 00 auxiliary axle
2534 L 6x2	01-91 /	**19495 00**		**19496 00**		19494 00 auxiliary axle
2538 6x4	01-94 /	**19495 00**		**19495 00**		
2538 S / LS 6x2/4	03-91 /	**19495 00**		**19496 00**		19495 00 auxiliary axle
2538 K 6x4	03-91 /	**19495 00**		**19495 00**		
2538 L 6x4 / 6x2	03-91 /	**19495 00**		**19496 00**		19494 00 auxiliary axle
2544 L / 5 6x2	01-92 /	**19495 00**		**19496 00**		19494 00 auxiliary axle
2550 S 6x4	01-91 /	**19495 00**		**19495 00**		
2550 L 6x2	01-91 /	**19495 00**		**19496 00**		19494 00 auxiliary axle
2553 S 6x4	01-96 /	**19495 00**		**19495 00**		
2553 L 6x2	01-96 /	**19495 00**		**19496 00**		19494 00 auxiliary axle
2624 A / AK 6x6	/ 89	**19494 00**		**19494 00**		19494 00 trailer axle
2624 S / K 6x4	/ 89	**19494 00**		**19494 00**		19494 00 trailer axle
2626 AK / A / AS / AB / LAK 6x6	73 / 89	**19494 00**		**19494 00**		19494 00 trailer axle
2626 / K / B / LK / 5 6x4	73 / 89	**19494 00**		**19494 00**		19494 00 trailer axle
2628 A	90 / 03-91	**19494 00**		**19494 00**		
2628 A / AS / AK	80 / 03-91	**19494 00**		**19494 00**		
2628 B	80 / 08-89	**19494 00**		**19494 00**		
2628 S / K	80 / 03-91	**19494 00**		**19494 00**		
2629 A / AS / AK 6x6	07-88 / 08-94	**19494 00**		**19495 00**		
2629 S / K / B 6x4	07-88 / 08-94	**19495 00**		**19495 00**		
2631 A / AS / AK 6x6	06-92 /	**19494 00**		**19495 00**		
2631 S / B 6x4	06-92 /	**19495 00**		**19495 00**		
2632 A / AS 6x6	73 / 89	**19494 00**		**19494 00**		19494 00 trailer axle
2632 AK / LAK 6x6	73 / 89	**19494 00**		**19494 00**		19494 00 trailer axle
2632 with Eatons axle		**19494 00**		**19896 00**		19896 00 2nd rear axle
2633 S	05-82 / 05-87	**19494 00**		**19494 00**		
2635 A / AK 6x6	02-90 / 08-94	**19494 00**		**19495 00**		
2635 AS 6x6	02-90 /	**19494 00**		**19495 00**		
2635 S / AS / AK	09-87 / 03-91	**19494 00**		**19494 00**		
2635 S	04-86 / 03-91	**19494 00**		**19494 00**		
2635 S / K 6x4	07-88 / 08-94	**19495 00**		**19495 00**		

MODEL / *MODELO*	YEAR - *AÑO*	FRONT *DELANTERA*	SYSTEM *SISTEMA*	REAR *TRASERA*	SYSTEM *SISTEMA*	OBS.
MERCEDES-BENZ TRUCKS						
2636 A	11-81 / 03-91	**19494 00**		**19494 00**		
2636 AS / AK	11-81 / 03-91	**19494 00**		**19494 00**		
2636 S / K	11-81 / 03-91	**19494 00**		**19494 00**		
2638 AK 6x6	09-91 /	**19494 00**		**19495 00**		
2638 AS 6x6	07-92 /	**19494 00**		**19495 00**		
2638 S	81 / 86	**19494 00**		**19494 00**		
2638 S / K 6x4	09-91 /	**19495 00**		**19495 00**		
2644 S	10-85 / 02-90	**19494 00**		**19494 00**		
2644 S 6x4	01-91 /	**19495 00**		**19495 00**		
2648 S 6x4	12-88 / 07-92	**19495 00**		**19495 00**		
2650 S 6x4	07-92 /	**19495 00**		**19495 00**		
3025 B	86 / 07-87	**19494 00**		**17238 00**		
3025 K	86 / 07-87	**19494 00**		**19494 00**		
3028 K / B	86 / 07-87	**19494 00**		**19494 00**		
3038 S 6x4	89 / 91	**19495 00**		**19495 00**		19495 00 trailer axle
3228 B	07-87 / 03-91	**19494 00**		**17238 00**		
3228 B / K 8x4/4	89 /	**19494 00**		**17238 00**		
3228 K	07-87 / 03-91	**19494 00**		**19494 00**		
3229 B / K8x4/4	89 / 91	**19494 00**		**19494 00**		
3229 K / B	09-89 / 07-92	**19495 00**		**19495 00**		
3229 / B / K 8x4/4	83 / 88	**19494 00**		**19494 00**		
3233 K / B	10-90 / 07-92	**19495 00**		**19495 00**		
3234 K / B	02-92 /	**19495 00**		**19495 00**		
3235 K	07-87 / 07-92	**19495 00**		**19495 00**		
3235 K 8x4/4	89 / 91	**19495 00**		**19495 00**		19495 00 trailer axle
3235 K 8x4/4	83 / 88	**19494 00**		**19494 00**		
3236 A 6x6	89 /	**19494 00**		**19494 00**		19494 00 auxiliary axle
3236 A 8x8	89 / 91	**19494 00**		**19494 00**		
3250 A	09-85 / 08-94	**19494 00**		**19494 00**		
3250 A 6x6	89 /	**19494 00**		**19494 00**		19494 00 auxiliary axle
3250 AF	09-85 / 08-94	**19494 00**		**19495 00**		
3250 AF 6x6	89 /	**19494 00**		**19495 00**		19495 00 auxiliary axle
3328 8x4/2	83 / 88	**19494 00**		**19494 00**		
3328 B / K	07-82 / 07-87	**19494 00**		**19494 00**		
3336 AK	09-86 / 92	**19494 00**		**19494 00**		
3336 / S / K	83 / 92	**19494 00**		**19494 00**		
3528 B / K 8x4/4	89 / 91	**19494 00**		**19494 00**		
3534 K	10-93 /	**19495 00**		**19495 00**		
3535 AK	02-90 / 08-94	**19495 00**		**19495 00**		
3535 AK	09-87 / 02-90	**19495 00**		**19495 00**		
3535 K	09-87 / 01-89	**19495 00**		**19495 00**		
3535 K / B	10-88 / 08-94	**19495 00**		**19495 00**		
3536 8x4/4	83 / 88	**19494 00**		**19494 00**		
3538 K / AK	03-91 /	**19495 00**		**19495 00**		
3550 S	05-92 /	**19495 00**		**19495 00**		
3824 6x4 / 6x6	84 /	**19494 00**		**19494 00**		19494 00 2nd rear axle
3824 6x4 / 6x6	84 /			**19160 00**		19160 00 2nd rear axle
3850 A	09-85 / 08-94	**19495 00**		**19495 00**		
3850 A / AS 6x6	89 /	**19494 00**		**19495 00**		19495 00 auxiliary axle
3850 AS 8x8	83 / 88	**19494 00**		**19494 00**		
4050 A 8x8	83 / 88	**19494 00**		**19494 00**		
410 x 120/123 mm (LKW)				**17682 00**		
410 x 140/143 mm (Buses)				**17795/796 00**		
410 x 140/143 mm (LKW)				**17238 00**		

MODEL / *MODELO*	YEAR - *AÑO*	FRONT *DELANTERA*	SYSTEM *SISTEMA*	REAR *TRASERA*	SYSTEM *SISTEMA*	OBS.
MERCEDES-BENZ TRUCKS						
410 x 160/163 mm (Buses)				**19579/580 00**		
410 x 160/163 mm (LKW)				**19494 00**		
410 x 180/183 mm (LKW)				**19495 00**		
410 x 220/223 mm				**19496 00**		
410 x 220/223 mm (Buses)				**19581/582 00**		
4850 A 8x8	83 / 88	**19494 00**		**19494 00**		
609 D 5 / 5 tonss	86 / 08-96			**15869/870 00**		
709 D 6 / 5 tons	86 / 08-96			**17973/974 00**		
709 K	03-84 / 06-87	**15836 00**		**15836 00**		
709 K	07-87 / 10-90	**15836 20**		**15836 20**		
711 D 6 / 5 tons	86 / 08-96			**17973/974 00**		
809 D 7,5 tons	86 / 08-96			**17351/975 00**		
809 K	03-84 /	**17280/928 00**		**17280/928 00**		
811 D 7,5 tons	86 / 08-96			**17351/975 00**		
811 K	03-94 /	**17280/928 20**		**17280/928 20**		
814 7,5 tons	86 / 08-96			**17351/975 00**		
814 F	05-86 /	**17280/928 00**		**17929 00**		
814 L / K / S	03-84 /	**17280/928 00**		**17929 00**		
817 F	03-96 /	**17280/928 20**		**17929 20**		
817 L / K / S / LS	86 /	**17280/928 00**		**17929 00**		
911 B LP	01-67 / 03-77	**19706/579 00**				
911 B LPS	01-67 / 03-77	**19706/579 00**				
914 AK	02-87 /	**17949/950 20**		**17949/950 20**		
914 KO	01-87 /	**17929 00**		**17929 00**		
914 O	87 /	**19844/845 00**		**17949/950 00**		
914 / K	03-84 /	**17929 00**		**17929 00**		
917 AF	02-87 /	**17949/950 20**		**17949/950 20**		
917 AK	03-94 /	**17949/950 20**		**17949/950 20**		
917 / K / KO	03-94 /	**17929 20**		**17929 20**		
MERCEDES-BENZ BUSES						
709 LP / LPK / LPO / LPS	77 /	**15057 00**		**15057 00**		
LPO 608	70 /	**15057 00**		**15057 00**		
O 1114 L (BM 675)	84 / 09-88	**17949/950 00**		**17949/950 00**		
O 1114 L (BM 675)	10-88 /	**19844/845 20**		**19844/845 20**		
O 1117 L (BM 676)	84 / 09-88	**17949/950 00**		**17949/950 00**		
O 1117 L (BM 676)	10-88 /	**19844/845 20**		**19844/845 20**		
O 1120 L (BM 677)	84 / 09-88	**17949/950 00**		**17949/950 00**		
O 1120 L (BM 677)	10-88 /	**19844/845 20**		**19844/845 20**		
O 301	02-86 / 09-88	**19844/845 00**		**19844/845 00**		
O 301	10-88 /	**19844/845 20**		**19844/845 20**		
O 303	10-74 / 09-92	**17795/796 00**		**19579/580 00**		
O 303	10-74 / 09-92	**19579/580 00**		**19581/582 00**		
O 303 4x2	10-74 / 09-92			**19707/581 00**		
O 305 G	02-78 / 05-87	**19579/580 00**		**19581/582 00**		
O 305 G 6x2	02-78 / 05-87			**19707/581 00**		
O 305 ST	01-69 / 05-87	**19579/580 00**		**19581/582 00**		
O 305 ST 4x2	01-69 / 05-87			**19707/581 00**		
O 307	11-76 / 07-87	**19579/580 00**		**19581/582 00**		
O 307 4x2	04-73 / 08-87			**19707/581 00**		
O 309	66 / 09-77	**15349/350 90**		**15349/350 90**		
O 309	10-77 /	**15580/581 16**		**15580/581 16**		
O 309	10-77 /	**17409 19**		**17409 19**		
O 317 K	70 /			**19466 00**		19032 97 trailer axle
O 317.2	70 /			**19466 00**		19032 97 trailer axle

MODEL / *MODELO*	YEAR - *AÑO*	FRONT *DELANTERA*	SYSTEM *SISTEMA*	REAR *TRASERA*	SYSTEM *SISTEMA*	OBS.
MERCEDES-BENZ BUSES						
O 402	02-86 /	**19844/845 00**		**19844/845 00**		
O 405 G 6x2	11-85 /			**19707/581 00**		
O 405 G / GN / GTD	11-86 /	**19579/580 00**		**19581/582 00**		
O 405 GN 6x2	11-85 /			**19707/581 00**		
O 405 GTD 6x2	11-85 /			**19707/581 00**		
O 405 N 4x2	12-84 /			**19707/581 00**		
O 405 ST 4x2	12-84 /			**19707/581 00**		
O 405 ST / N	12-84 /	**19579/580 00**		**19581/582 00**		
O 407	03-87 /	**19579/580 00**		**19581/582 00**		
O 407 4x2	03-87 / 11-01			**19707/581 00**		
O 408	01-91 /	**19579/580 00**		**19581/582 00**		
O 408 4x2	01-91 / 12-98			**19707/581 00**		
O 409 (5 tons)	86 /			**15869/870 00**		
O 409 (6 tons)	86 /			**17973/974 00**		
O 409 (7,5 tons)	86 /			**17351/975 00**		
O 609 D				**17351/975 00**		
O 611 D				**17351/975 00**		
O 614 D				**17351/975 00**		
O 814 / L	84 / 06-87	**17280/928 00**		**17927 00**		(8 up to 8,6 tons)
O 814 / L	84 / 06-87	**17280/928 00**		**17280/928 00**		(8 up to 8,6 tons)
O 814 L	07-87 /	**17280/928 20**		**17927 20**		(8 up to 8,6 tons)
O 814 L	07-87 /	**17280/928 20**		**17280/928 20**		(8 up to 8,6 tons)
O 814 L (BM 674)	84 / 06-87	**17927 00**		**17927 00**		(7.5 ton)
O 814 L (BM 674)	07-87 /	**17927 20**		**17927 20**		(7.5 ton)
O 817 / L (BM 676)	84 / 06-87	**17280/928 00**		**17927 00**		
O 817 / L (BM 676)	84 / 06-87	**17280/928 00**		**17280/928 00**		
O 817 L (BM 676)	07-87 /	**17280/928 20**		**17927 20**		
O 817 L (BM 676)	07-87 /	**17280/928 20**		**17280/928 20**		
O-303 4x2	10-74 / 09-92			**19707/581 00**		
O-305 G 6x2	02-78 / 05-87			**19707/581 00**		
O-305 ST 4x2	01-69 / 05-87			**19707/581 00**		
O-307 4x2	04-73 / 08-87			**19707/581 00**		
O-405 G 6x2	11-85 /			**19707/581 00**		
O-405 GN 6x2	11-85 /			**19707/581 00**		
O-405 GTD 6x2	11-85 /			**19707/581 00**		
O-405 N 4x2	12-84 /			**19707/581 00**		
O-405 ST 4x2	12-84 /			**19707/581 00**		
O-407 4x2	03-87 / 11-01			**19707/581 00**		
O-408 4x2	01-91 / 12-98			**19707/581 00**		

MERCURY						
GRAND MARQUIS	05 / 10	**PD/348**		**PD/1018**		
GRAND MARQUIS LONG WHEEL BASE	03 / 04	**PD/348**		**PD/1018**		
GRAND MARQUIS POLICE	05 / 06	**PD/348**		**PD/1018**		
MARINER	05 / 07	**PD/530**		**PD/804**		
MARINER	08 / 09	**PD/803**		**PD/804**		
MARINER 4WD	05 / 09	**PD/803**		**PD/804**		
MILAN 3.0L	08 / 09	**PD/647**		**PD/646**		
MONTEGO 3.0L	05 / 07	**PD/1021**		**PD/768**		
MOUNTAINEER	96 / 02	**PD/332**		**PD/410**		
MOUNTAINEER	02 / 03	**PD/365**		**PD/736**		
VILLAGER	93 / 02	**PD/555**				

MODEL / *MODELO*	YEAR - *AÑO*	FRONT *DELANTERA*	SYSTEM *SISTEMA*	REAR *TRASERA*	SYSTEM *SISTEMA*	OBS.
METALPI						
3° EIXO	Todos			**FI/117 MB/183 4515-C CA/32**	Varga MB Master	
CARRETA	/ 84			**SV/226**		
CARRETA	84 /			**CA/32**	Master	
METALPI	Todos					MB/183
METALPI	Todos					4515-G
METALPI	Todos					CA/32
MERITOR						
2 x 60 / IVECO / RENAULT				**PD/355**		
2 x 60 / IVECO / RENAULT				**PD/355**	Meritor	
2 x 60 / MB / OPTARE				**PD/104**	Meritor	
2 x 68				**PD/140-A**	Meritor	
2 x 68				**PD/154**	Meritor	
2 x 68 B frame				**PD/123**	Meritor	
B-DUCO				**PD/159**	Meritor	
C-DUCO				**PD/160**	Meritor	
D2				**PD/166**	Meritor	
D3				**PD/125**	Meritor	
D3				**PD/125 (30mm)**	Meritor	
D3				**PD/125**	Meritor	
D-DUCO				**PD/529**	Meritor	
D-ELSA1				**PD/125**	Meritor	
D-ELSA1				**PD/125 (30mm)**	Meritor	
D-ELSA2					PD/129	29156
D-ELSA2				**PD/129**	Meritor	
D-LISA				**PD/112**	Meritor	
DX195				**PD/138**	Meritor	
DX195				**PD/138**	Meritor	
ELSA / VGT195				**PD/130**		
ELSA225-1 VOLVO Trucks Applications				**PD/195**	Meritor	
ELSA225-3 RENAULT and VOLVO Trucks Applications				**PD/196**	Meritor	
HD CALIPER		**PD/112**				
MINI						
COOPER 1.6L	02 / 05	**PD/1058**				
COOPER 1.6L	06 / 06	**PD/1058**		**PD/1059**		
COOPER 1.6 2L AUTOMÁTICO	09 /	**PD/1288**		**PD/1303**		
COOPER 1.6 2L MANUAL	09 /	**PD/1288**		**PD/1303**		
COOPER	07 /			**PD/1451**	Lucas	
COOPER CONTRYMAN	11 / 13	**PD/1288**		**PD/1303**		
COOPER COUNTRYMAN	11 /			**PD/1401**		
COOPER S 1.6 2L	09 /	**PD/1288**		**PD/1303**		
COOPER S	02 / 06	**PD/1058**		**PD/1059**		
COOPER S CONV	02 / 03	**PD/1058**				
COOPER S CLUBMAN 1.6 4L AUTOMÁTICO	09 /	**PD/1288**		**PD/1303**		
MINUANO						
CARRETA	Todos			**SV/223**		
MITSUBISHI						
3000 GT	91 /	**PD/383**	Akebono			

MODEL / *MODELO*	YEAR - *AÑO*	FRONT *DELANTERA*	SYSTEM *SISTEMA*	REAR *TRASERA*	SYSTEM *SISTEMA*	OBS.
MITSUBISHI						
AIRTREK SPACE RUNNER	00 /	**PD/631**	Sumitomo			
ASX 2.0 16V	10 /	**PD/631**	Sumitomo	**PD/632**	Sumitomo	
BK 215F (ROSA)	84 /	**1410**		**1434**		Bus
CANTER 4.5T		**F/1090**		**F/1090**		
CANTER 5.5T				**F/1089**		
CARISMA 1.8 16V GDI SEDAN/SW	07-95 /	**PD/1442**	Girling			
CARISMA 1.8 GDI SEDAN/SW	07-95 /	**PD/1442**	Girling			
CARISMA 1.8I 16V SEDAN/SW	07-95 /	**PD/1442**	Girling			
CARISMA 1.9 DID SEDAN/SW	07-95 /	**PD/1442**	Girling			
CARISMA 2.0I 16V GT EVO VI SEDAN/SW	07-95 /	**PD/1442**	Girling			
COLT 1.3i GL	92 /	**PD/452**	Sumitomo			
COLT 1.3i Van / 1.6i Van / 1.8i Van	92 /	**PD/452**	Sumitomo			
COLT 1.5i / 1.6i 16V GL / GLX	90 / 95	**PD/452**	Sumitomo			
COLT 1.8 D GL / EL	/ 94	**PD/452**	Sumitomo			
COLT 1.8 GTI	88 / 96	**PD/469**	Sumitomo			
COLT 1.8 i GT 16V	/ 96	**PD/469**	Sumitomo			
COLT VI 1.1I	06-04 /	**PD/1442**	Girling			
COLT VI 1.3I	06-04 /	**PD/1442**	Girling			
COLT VI 1.5I	06-04 /	**PD/1442**	Girling			
DIAMANTE	97 / 04			**PD/710**		
ECLIPSE	00 /	**PD/631**	Sumitomo			
ECLIPSE 2.0	/ 95	**PD/383**	Sumitomo			
ECLIPSE 2.0	95 /	**PD/469**	Sumitomo			
ECLIPSE GT / CONV	07 / 09	**PD/631**				
ECLIPSE GT / CONV 3.0L	03 / 05	**PD/631**		**PD/683**		
ECLIPSE GT / CONV 3.8L	06 / 06	**PD/631**		**PD/683**		
ENDEAVOR 2.8L	04 / 09	**PD/538**	Sumitomo	**PD/632**	Sumitomo	
EVOLUTION 2.0L	06 / 06			**PD/1060**		
FC 212	82 / 85	**F/766**		**F/766**		
FC 432C	86 / 92	**F/766**		**F/766**		
FC 432E	86 / 92	**F/766**		**F/766**		
FE 111-234	80 / 83	**F/766**		**F/766**		
FE 211 / 212	84 /	**F/766**		**F/766**		
FE 211C	82 / 85	**F/766**		**F/766**		
FE 211E	82 / 85	**F/766**		**F/766**		
FE 211ELG	82 / 85	**F/766**		**F/766**		
FE 214E	82 / 85	**F/766**		**F/766**		
FE 334	91 / 95	**F/766**		**F/766**		
FE 339	91 / 95	**F/766**		**F/766**		
FE 434C	86 / 92	**F/766**		**F/766**		
FE 439	91 / 95	**F/766**		**F/766**		
FE 444	86 / 92	**F/766**		**F/766**		
FE 444C	86 / 92	**F/766**		**F/766**		
FE 444E	86 / 92	**F/766**		**F/766**		
FE 444W	86 / 92	**F/766**		**F/766**		
FE 449	91 / 95	**F/766**		**F/766**		
FE 537	95 /	**F/766**		**F/766**		
FE 539	95 /	**F/766**		**F/766**		
FE 6374x4	95 /	**F/766**		**F/766**		4 x 4
FE 639SWB	95 /	**F/766**		**F/766**		
FE 647E	95 /	**F/766**		**F/766**		
FE 649E	95 /	**F/766**		**F/766**		
FG 637	95 /	**F/766**		**F/766**		4 x 4
FG 638 / 537 / 538	93 /	**F/766**		**F/766**		

MODEL / *MODELO*	YEAR - *AÑO*	FRONT *DELANTERA*	SYSTEM *SISTEMA*	REAR *TRASERA*	SYSTEM *SISTEMA*	OBS.
MITSUBISHI						
FH 100	90 / 96	**1410**		**1434**		
FH 100GS	90 / 96	**1410**		**1434**		
FH 100HS	90 / 96	**1410**		**1434**		
FH 141G	93 / 97	**1410**		**1434**		
FH 217H, 218H	95 /	**1410**				
FH 227 / 228	97 /			**1434**		
FK 102	91 / 95	**1410**		**1434**		4 x 2
FK 102 4x2	91 / 95	**1501**		**1502**		
FK 315 / 316 / 325 / 330 / 335 / 337 / 345 / 415 / 416 / 425 / 445 515 / 516 / 517 / 545 / 567 / 615 / 617 / 667	84 / 87	**1410**		**1434**		320mm Drum
FK 415	85 /92	**1410**		**1434**		16" wheels
FK 415	89 /	**F/783**		**F/784**		20" wheels
FK 415 / 416 / 425 / 445 / 515 / 516 / 545	87 /	**F/783**		**F/784**		
FK 417	89 /	**F/783**		**F/784**		20" wheels
FK 417	91 / 95	**1501**		**1502**		16" wheels
FK 417	91 / 95	**1410**		**1434**		16" wheels
FK 418				**1502**		
FK 457	89 /	**F/783**		**F/784**		20" wheels
FK 515 EZR	84 /	**1410**		**1434**		
FK 547	01	**F/939**				
FK 557F	89 / 92	**F/836**		**F/837**		
FK 617	95 / 03	**1501**		**1502**		
FK 618	97 / 03	**1501**		**1502**		
FM 315 / 515 / 516 / 517 / 616 / 618	83 /	**F/783**		**F/784**		400mm Drum
FM 515F	85 / 89	**F/783**		**F/784**		
FM 515MA	85 / 89	**F/783**		**F/784**		
FM 517HS	90 / 95	**F/783**		**F/784**		
FM 517MS	90 / 95	**F/783**		**F/784**		
FM 517WS	90 / 95	**F/783**		**F/784**		
FM 555	87 / 89	**F/836**		**F/837**		
FM 557H	85 / 95	**F/783**		**F/784**		
FM 557L	85 / 95	**F/783**		**F/784**		
FM 612 / 618 / 619 / 629	95 /	**F/783**		**F/784**		
FM 618	97 / 03	**F/783**		**F/784**		
FM 65	03 /	**F/939**				
FM 652 / 658 / 668	95 /			**F/837**		
FM 656	87 / 94	**F/836**				
FM 657HVS	97 / 03	**F/836**		**F/837**		
FM 657PS	95 / 97	**F/836**		**F/837**		
FM 658H	95 / 97	**F/836**		**F/837**		
FM 658HV	97 / 03	**F/836**		**F/837**		
FN 428	89 /	**F/939**				
FN 428	83 / 89	**F/836**		**1434**		Third axle 1434
FN 428 / 427	92 / 94	**F/939**				
FN 622	96 /	**F/783**				
FP 218 / 415 / 418 / 445 / 449	83 / 89	**F/836**		**F/837**		
FP 410-459	90 /	**F/939**				
FP 413 / 418	83 /	**F/836**		**F/837**		
FP 415 / 418 / 515	89 /	**F/939**				
FP 417FS	96 / 99	**F/939**		**F/835**		
FP 418	85 / 92	**F/836**		**F/837**		
FP 418NS2	92 / 97	**F/939**		**F/835**		
FP 518	85 / 92	**F/836**		**F/837**		
FR 415 (4WD)	84 /	**F/836**		**F/837**		

MODEL / *MODELO*	YEAR - *AÑO*	FRONT *DELANTERA*	SYSTEM *SISTEMA*	REAR *TRASERA*	SYSTEM *SISTEMA*	OBS.
MITSUBISHI						
FS 415	92 / 97	**F/939**		**F/835**		
FS 415 / 416 / 418 / 478	91 /	**F/783**				
FS 415 / 418	83 / 90	**1410**		**1434**		Third axle 1434
FS 428	92 / 96	**F/939**		**F/835**		Twin Steer
FS 428	87 / 91	**F/836**		**F/837**		
FSR 527		**F/939**				
FT 410 / 413 / 415 / 416 / 418	89 /	**F/939**				
FT 411 / 417	95 /	**F/939**				
FT 413 / 415 / 418	83 / 89	**F/836**		**F/837**		
FU 410 / 419 / 470 / 478	89 /	**F/939**				Third axle F/939
FU 413 / 415 / 418 / 419 / 478	83 / 89	**F/836**		**F/837**		Third axle F/ 836
FV 355	89 / 96	**F/939**		**F/835**		
FV 411 / 413 / 415 / 416 / 419	89 /	**F/939**				
FV 411 / 415 / 419	83 / 89	**F/836**		**F/837**		Third axle F/ 837
FV 411 /415 /419 /424	90 /	**F/939**				
FV 413	85 / 92	**F/836**		**F/837**		
FV 413 / 415 / 416 / 418	83 / 89	**F/836**		**F/837**		Third axle F/ 837
FV 415J	85 / 92	**F/836**		**F/837**		
FV 417TS / FS	96 / 99	**F/939**		**F/835**		
FV 418	88 / 91	**F/836**		**F/837**		
FV 418J	91 / 97	**F/939**		**F/835**		
FV 450	85 / 92			**F/837**		
FV 458	92 / 97	**F/939**		**F/835**		
FV 517KW	98 / 03	**F/939**		**F/835**		
FV 547K	98 / 03	**F/939**		**F/835**		
FV 658JR	85 / 92			**F/837**		
FW 425	84 /	**F/836**		**F/837**		Third axle F/ 837
GALANT	00 /	**PD/631**	Sumitomo			
GALANT 2.4L	05 / 07	**PD/631**		**PD/683**		
GALANT 3.0L	03 / 04	**PD/631**		**PD/683**		
GALANT 3.8L	05 / 07	**PD/631**		**PD/683**		
GALANT 1.6 GL	90 / 92	**PD/452**	Sumitomo			
GALANT 1.8 D GLX / Turbo GL / GS	90 / 95	**PD/469**	Sumitomo			
GALANT 1.8i 16V	92 / 96	**PD/469**	Sumitomo			
GALANT 1.8i EL / GL / GLS / GLX / GLXi	91 / 96	**PD/469**	Sumitomo			
GALANT 2.0	97 / 00	**PD/469**	Sumitomo			
GALANT 2.0 TD GL / GLS	92 / 96	**PD/469**	Sumitomo			
GALANT 2.0 TDi	96 /	**PD/469**	Sumitomo			
GALANT 2.0 V6 24V GS	93 / 97	**PD/469**	Sumitomo			
GALANT 2.0i 16V / GTi	90 / 96	**PD/469**	Sumitomo			
GALANT 2.0i GL / GLS / GLX	90 / 95	**PD/469**	Sumitomo			
GALANT 2.5	93 /	**PD/383**	Akebono			
GALANT 2.5 i 24V	91 / 93	**PD/383**	Akebono			
GALANT 2.5 V6	96 /	**PD/469**	Sumitomo			
GALANT II 2.0 TURBO ECI	80 / 84	**PD/607**	Sumitomo			
GALLOPER EXCEED	96 / 99	**PD/377**	Sumitomo			
GRANDIS 2.4L	08 / 09	**PD/631**		**PD/683**		
L-200	/ 96	**PD/377**	Sumitomo	**MI/139-CP**		
L-200 2.5D	86 / 94	**PD/377**	Sumitomo	**MI/139-CP**		Importado
L-200 2.5D	99 / 02	**PD/377**	Sumitomo	**MI/139-CP**		Brasileira
L-200 2.5D (exceto HPE e SPORT)	02 /	**PD/383**	Akebono			Brasileira
L-200 2.5D 4WD	93 / 97	**PD/383**	Akebono			Importado s/ABS
L-200 2.5D 4WD	97 / 00	**PD/383**	Akebono			Importado c/ABS
L-200 2.5D HPE	06-02 /	**PD/500**	Akebono	**MI/198-CP**		

MODEL / *MODELO*	YEAR - *AÑO*	FRONT *DELANTERA*	SYSTEM *SISTEMA*	REAR *TRASERA*	SYSTEM *SISTEMA*	OBS.
MITSUBISHI						
L-200 2.5D SPORT	06-02 /	**PD/500**	Akebono	**MI/198-CP**		
L-200 OUTDOOR	06-02 /	**PD/500**	Akebono	**MI/198-CP**		
L-200 TRITON HPE 3.2 / 3.5	08 /	**PD/771**	Tokico	**MI/370-CP**	Akebono	Freio traseiro Ø 295,0x50mm
L-300	89 /	**PD/377**	Akebono	**MI/139-CP**		
L-300	96 /			**PD/450**	Akebono	
L-300 1.6 / 2.5D Van	/ 94	**PD/469**	Sumitomo			
L-300 1.6 DX / 2.4 DX / 2.4i / 2.5D	/ 96	**PD/377**	Sumitomo	**MI/139-CP**		
L-300 2.5 FURGÃO	96 /			**PD/450**	Akebono	
L-300 2.5 KOMBI	96 /			**PD/450**	Akebono	
L-400	96 /			**PD/450**	Akebono	
L-400 2.5 TDI FURGÃO	96 /			**PD/450**	Akebono	
L-400 2.5 TDI KOMBI	96 /			**PD/450**	Akebono	
LANCER	04 /	**PD/631**	Sumitomo			
LANCER 1.2 GL	90 / 95	**PD/452**	Sumitomo			
LANCER 1.3i / 1.5 GLX / 1.8 GL / GLX	93 / 96	**PD/452**	Sumitomo			
LANCER 1.5i / 1.6 i / 1.8 D	90 / 96	**PD/452**	Sumitomo			
LANCER 1.6i 16V	94 / 96	**PD/452**	Sumitomo			
LANCER 1.6i GL / GLX	92 / 96	**PD/469**	Sumitomo			
LANCER 1.8i	91 / 96	**PD/452**	Sumitomo			
LANCER 1.8i 16V	94 /	**PD/452**	Sumitomo			
LANCER 1.8i 16V GTi	91 / 96	**PD/469**	Sumitomo			
LANCER 2.0 D	92 /	**PD/452**	Sumitomo			
LANCER DE / ES 2.0L	04 / 07	**PD/742**				
LANCER GTS	08 / 09	**PD/631**		**PD/632**		
LANCER RALLIANT 2.4L	05 / 06	**PD/631**		**PD/723**		
LANCER RALLIART	05	**PD/631**	Sumitomo			
MK 102 / 116	83 / 84	**1410**		**1434**		Bus
MK 116 (Turbo)	84 /	**1410**		**1434**		Bus
MM 116 / 117 / 515 / 517 / 527	84 / 89	**F/836**		**F/837**		Bus
MM 218 / 526 / 618 / 816 / 826	90 /	**F/939**				Bus
MONTERO	01 / 05	**PD/538**	Sumitomo	**PD/632**	Sumitomo	
MONTERO 3.8L	03 / 09	**PD/538**		**PD/632**		
MONTERO 1.8	01 /	**PD/74**	Sumitomo			
MONTERO 1.8 Gdi	98 /	**PD/383**	Akebono	**PD/450**	Akebono	
MONTERO 2.3 TD / 2.4 i GL / GLX	91 /	**PD/383**	Akebono	**PD/450**	Akebono	
MONTERO 2.3 TD / 2.5 TD EXE Wagon	/ 91	**PD/377**	Sumitomo			
MONTERO 2.4i GL	91 /			**PD/450**	Akebono	
MONTERO 2.4i GL / GLX	/ 91	**PD/377**	Sumitomo			
MONTERO 2.4i GLX	91 /			**PD/450**	Akebono	
MONTERO 2.5 24V TD GL	90 /			**PD/450**	Akebono	
MONTERO 2.5 24V TD GL / GLX	90 /	**PD/383**	Akebono	**PD/450**	Akebono	
MONTERO 2.5 24V TD GL / GLX	/ 90	**PD/377**	Sumitomo			
MONTERO 2.6 GL / GLX / GLS	/ 90	**PD/377**	Sumitomo			
MONTERO 2.8 TD	94 /	**PD/383**	Akebono	**PD/450**	Akebono	
MONTERO 3.0 V6	90 /			**PD/450**	Akebono	
MONTERO 3.0 V6	90 /	**PD/383**	Akebono	**PD/450**	Akebono	
MONTERO 3.0 V6	/ 90	**PD/377**	Sumitomo			
MONTERO 3.0 V6 24V	94 /	**PD/383**	Akebono	**PD/450**	Akebono	
MONTERO SPORT 2.5 TD	97 /	**PD/383**	Akebono	**PD/616**	Sumitomo	
MONTERO SPORT 3.0i V6	97 /	**PD/383**	Akebono	**PD/616**	Sumitomo	
MONTERO SPORT 3.5L	03 / 08	**PD/383**		**PD/616**		
MP 118 / 218 / 618	84 / 89	**F/836**		**F/837**		Bus
MP 218 / 618 / 628	90 /	**F/939**				Bus
MS 713 / 715 / 725 / 735	85 / 89	**F/836**		**F/837**		Bus

MODEL / *MODELO*	YEAR - *AÑO*	FRONT *DELANTERA*	SYSTEM *SISTEMA*	REAR *TRASERA*	SYSTEM *SISTEMA*	OBS.
MITSUBISHI						
MS 716 / 720 / 726 / 729 / 815 / 821 / 826	90 /	**F/939**				Bus
MU 103 / 378	90 /	**F/939**				Bus, third axle F/939
MU515 / 525	84 /	**F/836**		**F/837**		Bus, third axle F/ 836
OUTLANDER	03 /	**PD/631**	Sumitomo	**PD/632**	Sumitomo	
OUTLANDER	05-03 /	**PD/383**	Akebono			
OUTLANDER	05 / 06	**PD/383**		**PD/723**		
OUTLANDER 2.4L	04 /	**PD/631**				
OUTLANDER 3.0L	07 / 09	**PD/631**		**PD/632**		
PAJERO 1.8	01 /	**PD/74**	Sumitomo			
PAJERO 2.5 TD	98 /	**PD/383**	Akebono			
PAJERO 2.5 TDI GL	91 / 98	**PD/383**	Akebono	**PD/450**	Akebono	
PAJERO 2.5 TDI GLS	91 / 98	**PD/383**	Akebono	**PD/450**	Akebono	
PAJERO 2.5 TDI GLX	91 / 98	**PD/383**	Akebono	**PD/450**	Akebono	
PAJERO 2.6	/ 94			**PD/450**	Akebono	
PAJERO 2.8 TDI	91 /	**PD/383**	Akebono	**PD/450**	Akebono	
PAJERO 3.0 V6	99 /	**PD/383**	Akebono			
PAJERO 3.0i V6 24V GL	91 / 99	**PD/383**	Akebono	**PD/450**	Akebono	
PAJERO 3.0i V6 24V GLS	91 / 99	**PD/383**	Akebono	**PD/450**	Akebono	
PAJERO 3.0i V6 24V GLX	91 / 99	**PD/383**	Akebono	**PD/450**	Akebono	
PAJERO 3.5	91 /	**PD/383**	Akebono			
PAJERO 3.5i V6 24V GL	94 /	**PD/383**	Akebono	**PD/450**	Akebono	
PAJERO 3.5i V6 24V GLS	94 /	**PD/383**	Akebono	**PD/450**	Akebono	
PAJERO 3.5i V6 24V GLX	94 /	**PD/383**	Akebono	**PD/450**	Akebono	
PAJERO DAKAR 3.2 4X4	09 /	**PD/771**	Tokico			
PAJERO FULL	02 /	**PD/538**	Akebono	**PD/632**	Sumitomo	
PAJERO FULL	09 /	**PD/528**	Sumitomo	**PD/695**	Sumitomo	
PAJERO SPORT 2.5 TD	04 /	**PD/500**	Akebono	**PD/616**	Sumitomo	
PAJERO SPORT 2.5 TD	97 / 04			**PD/616**	Sumitomo	
PAJERO SPORT 3.0i V6	97 / 04			**PD/616**	Sumitomo	
PAJERO SPORT 3.5	04 /	**PD/500**	Akebono	**PD/616**	Sumitomo	
PAJERO TR4	02 /	**PD/74**	Sumitomo			
PRECIS	89	**PD/549**	Akebono			
SAPPORO II 2.0 TURBO ECI	80 / 84	**PD/607**	Sumitomo			
SHOGUN 2.5 TD GLS / GLX	91 / 96	**PD/383**	Akebono			
SHOGUN 2.8	94 /	**PD/383**	Akebono	**PD/450**	Akebono	
SHOGUN 3.0i GLS	91 / 96	**PD/383**	Akebono	**PD/450**	Akebono	
SHOGUN 3.5	93 /	**PD/383**	Akebono	**PD/450**	Akebono	
SIGMA 2.5	92 / 96	**PD/383**	Akebono			
SIGMA 3.0	91 / 96	**PD/383**	Akebono			
SIGMA 3.0	92 / 96	**PD/383**	Akebono	**PD/450**	Akebono	
SPACE GEAR 2.4 / 2.5	94 /	**PD/383**	Akebono	**PD/450**	Akebono	
SPACE RUNNER 1.8	91 / 96	**PD/469**	Sumitomo			
SPACE RUNNER 2.0	91 / 96	**PD/469**	Sumitomo			
SPACE STAR 1.3I 16V	06-98 /	**PD/1442**	Girling			
SPACE STAR 1.6I 16V	06-98 /	**PD/1442**	Girling			
SPACE STAR 1.6L	03 / 04	**PD/1053**		**PD/1060**		
SPACE STAR 1.8 GDI	06-98 /	**PD/1442**	Girling			
SPACE STAR 1.9 DID	06-98 /	**PD/1442**	Girling			
SPACE WAGON 1.8	91 / 96	**PD/469**	Sumitomo			
SPACE WAGON 1.8 TD GLX	91 / 96	**PD/469**	Sumitomo			
SPACE WAGON 2.0	91 /	**PD/469**	Sumitomo			
SPACE WAGON 2.0 TD	91 /	**PD/469**	Sumitomo			
SPACE WAGON 2.4	91 /	**PD/469**	Sumitomo			
STARION 2.0 TURBO ECI	82 / 90	**PD/607**	Sumitomo			

MODEL / *MODELO*	YEAR - *AÑO*	FRONT *DELANTERA*	SYSTEM *SISTEMA*	REAR *TRASERA*	SYSTEM *SISTEMA*	OBS.
MITSUBISHI						
STARION 2.6 TURNBO ECI	82 / 90	**PD/607**	Sumitomo			
MITSUBISHI FUSO						
FE	96 / 04			**PD/617**		
FE120	05 /	**PD/185**		**PD/185**		
FE140	06 / 07	**PD/185**		**PD/185**		
FE145	05 / 09	**PD/185**		**PD/185**		
FE145CC	05 / 09	**PD/185**		**PD/185**		
FE180	05 / 09	**PD/185**		**PD/185**		
FE-CA	01	**PD/617**		**PD/617**		
FE-HD	96 / 02			**PD/617**		
FE-HD	03 / 04	**PD/617**		**PD/617**		
FE-SP	96 / 04	**PD/617**		**PD/617**		
MOL						
419 x 203,2 mm				**19365/366 00**		ROR Axle
420 x 180,0 mm				**19032 00**		BPW Axle
420 x 200,0 mm				**19094 00**		BPW Axle
MONTENEGRO						
CARRETA				**AC/30**		
NEOPLAN						
CENTROLINER	03 /	**PD/129**	Meritor	**PD/129**	Meritor	
CITYLINER N 116	01-74 /			**MB/76/77/2**		
CITYLINER N 116 - SERIES	90 /	**PD/116**	Knorr	**PD/116**	Knorr	
CITYLINER N 116/3	01-74 /			**MB/76/77/2**		
JETLINER N 208 / N 213 / N 214 / N 216	90 /	**PD/116**	Knorr	**PD/116**	Knorr	
JETLINER N 214	01-74 / 12-82			**MB/76/77/2**		
JETLINER N 216	01-74 / 12-82			**MB/76/77/2**		
JETLINER N 218	01-74 / 12-82			**MB/76/77/2**		
JETLINER N 314	01-74 / 12-82			**MB/76/77/2**		
JETLINER N 316	01-74 / 12-82			**MB/76/77/2**		
JETLINER N 326	01-74 /			**MB/76/77/2**		
JETLINER N 414	01-74 / 12-82			**MB/76/77/2**		
JETLINER N 416	01-74 / 12-82			**MB/76/77/2**		
JETLINER N 426	01-74 /			**MB/76/77/2**		
LOW CHASSIS BUSES	92 /	**PD/116**	Knorr			
METROLINER MIC 4008 / 4012 / 4017	01-90 /	**PD/152**	Wabco	**PD/152**	Wabco	
MIC 4008	90 /	**19849/850 00**		**19847/848 00**		
MIC 4012	90 /	**19849/850 00**		**19847/848 00**		
MIC 4017	90 /	**19849/850 00**		**19847/848 00**		
N 116	74 /	**19579/580 00**		**19581/582 00**		Mercedes Benz axle
N 116	01-74 /			**19707/581 00**		
N 116	74 /			**19256/260 00**		DAF axle
N 116	92 /			**19847/848 00**		
N 116/3	01-74 /			**19707/581 00**		
N 116/3	74 /	**19579/580 00**		**19581/582 00**		Mercedes Benz axle
N 116/3	74 /			**19256/260 00**		DAF axle
N 116/3	92 /			**19847/848 00**		
N 116/3H	92 /			**19847/848 00**		
N 116H	92 /			**19847/848 00**		
N 117/2	92 /			**19847/848 00**		
N 117/3	92 /			**19847/848 00**		
N 122/3	74 /	**19579/580 00**		**19581/582 00**		Mercedes Benz axle
N 122/3	74 /			**19256/260 00**		DAF axle

MODEL / *MODELO*	YEAR - *AÑO*	FRONT *DELANTERA*	SYSTEM *SISTEMA*	REAR *TRASERA*	SYSTEM *SISTEMA*	OBS.
NEOPLAN						
N 122/3	92 /			**19847/848 00**		
N 122/3 6x2	01-79 /			**19707/581 00**		
N 138	75 /	**19579/580 00**		**19581/582 00**		19579/580 00 Trailer axle
N 138/4	75 /	**19579/580 00**		**19581/582 00**		19579/580 00 Trailer axle
N 208	74 /	**17297 00**		**17298 00**		
N 210	74 /	**17297 00**		**17298 00**		
N 212	74 /			**19466 00**		
N 212H	92 /			**19847/848 00**		
N 213	74 /			**19466 00**		
N 213H / SHD	92 /			**19847/848 00**		
N 214	01-74 / 12-82			**19707/581 00**		
N 214	74 / 82	**19579/580 00**		**19581/582 00**		Mercedes Benz axle
N 214	74 / 82			**19256/260 00**		DAF axle
N 214H / SHD	92 /			**19847/848 00**		
N 216	01-74 / 12-82			**19707/581 00**		
N 216	74 / 82	**19579/580 00**		**19581/582 00**		Mercedes Benz axle
N 216	74 / 82			**19256/260 00**		DAF axle
N 218	01-74 / 12-82			**19707/581 00**		
N 218	74 / 82	**19579/580 00**		**19581/582 00**		Mercedes Benz axle
N 218	74 / 82			**19256/260 00**		DAF axle
N 312	92 /			**19847/848 00**		
N 312	74 /			**19466 00**		
N 313	74 /			**19466 00**		
N 314	01-74 / 12-82			**19707/581 00**		
N 314	74 / 82	**19579/580 00**		**19581/582 00**		Mercedes Benz axle
N 314	74 / 82			**19256/260 00**		DAF axle
N 316	01-74 / 12-82			**19707/581 00**		
N 316	74 / 82	**19579/580 00**		**19581/582 00**		Mercedes Benz axle
N 316	74 / 82			**19256/260 00**		DAF axle
N 316	92 /			**19847/848 00**		
N 326	01-74 /			**19707/581 00**		
N 326	74 /	**19579/580 00**		**19581/582 00**		Mercedes Benz axle
N 4007NF	88 /	**19849/850 00**				
N 4008	92 /			**19847/848 00**		
N 4009	92 /			**19847/848 00**		
N 4009LNF	88 /	**19849/850 00**				
N 4009NF	88 /	**19849/850 00**				
N 4010	92 /			**19847/848 00**		
N 4011	92 /			**19847/848 00**		
N 4014	92 /			**19847/848 00**		
N 4014NF	88 /	**19849/850 00**				
N 4016	92 /			**19847/848 00**		
N 4016NF	88 /	**19849/850 00**				
N 4021NF	88 /	**19849/850 00**				
N 4024	92 /			**19847/848 00**		
N 4026	92 /			**19847/848 00**		
N 412	74 /			**19466 00**		
N 413	74 /			**19466 00**		
N 414	01-74 / 12-82			**19707/581 00**		
N 414	74 / 82	**19579/580 00**		**19581/582 00**		Mercedes Benz axle
N 414	74 / 82			**19256/260 00**		DAF axle
N 416	01-74 / 12-82			**19707/581 00**		
N 416	83 /	**19849/850 00**		**19847/848 00**		
N 416	74 / 82	**19579/580 00**		**19581/582 00**		Mercedes Benz axle

MODEL / *MODELO*	YEAR - *AÑO*	FRONT *DELANTERA*	SYSTEM *SISTEMA*	REAR *TRASERA*	SYSTEM *SISTEMA*	OBS.
NEOPLAN						
N 416	74 / 82			**19256/260 00**		DAF axle
N 426	01-74 /			**19707/581 00**		
N 426	74 /	**19579/580 00**		**19581/582 00**		Mercedes Benz axle
N 8008		**PD/152**	Wabco	**PD/152**	Wabco	
NEOPLAN BUSES		**19896 00**		**19896 00**		with Eaton axle
NEOPLAN-BUS WITH DISC BRAKE		**PD/175**	Knorr			
REGIOLINER N 3014 / N 3016	92 /	**PD/116**	Knorr			
SKYLINER N 122 / N 122/3	90 /	**PD/116**	Knorr	**PD/116**	Knorr	
SKYLINER N 122/3 6x2	01-79 /			**MB/76/77/2**		
SPACELINER N 117 / N 117/3	90 /	**PD/116**	Knorr	**PD/116**	Knorr	
STARLINER N 516 / N 516/3	96 /	**PD/116**	Knorr	**PD/116**	Knorr	
TRANSLINER N 312 / N 316	92 /	**PD/116**	Knorr	**PD/116**	Knorr	
NISSAN						
100 NX 1.6i 16V GTI	91 /	**PD/532 PD/393**	Sumitomo			
100 NX 1.8i	91 /	**PD/532 PD/660**	Sumitomo			
100 NX 1.8i / 2.0i 16V GT / Coupé	91 /	**PD/393**	Sumitomo			
100 NX 2.0i 16V GT	91 /	**PD/532 PD/660**	Sumitomo			
100 NX Coupé	91 /	**PD/532 PD/660**	Sumitomo			
100 SX 1.6	91 /	**PD/532 PD/660**	Sumitomo			
100 SX 1.6/ 1.8/ 2.0 i 16V Coupe	91 /	**PD/393**	Sumitomo			
100 SX 1.8	91 /	**PD/532 PD/660**	Sumitomo			
100 SX 2.0 i 16V Coupe	91 /	**PD/532 PD/660**	Sumitomo			
200 SX 1.8 i 16V Turbo	91 / 96	**PD/453**	Akebono			
200 SX 3.0 i V6	87 /	**PD/428**	Akebono			
240 SX	/ 96	**PD/453**	Akebono			
240 SX	97 / 99	**PD/453**	Sumitomo			
300 SX 3.0 V6 / Turbo	84 /	**PD/428**	Akebono			
350 Z	03 / 05	**PD/728**		**PD/585**		
350 Z	06 /			**PD/585**		
350Z	06 / 07	**PD/1014**		**PD/585**		
350Z 3.5L	03 / 05	**PD/550**		**PD/585**		
370Z TOURING / NISMO 3.7L	09 / 10			**PD/585**		
ALMERA 1.8L	01 / 05	**PD/595**		**PD/596**		
ALTIMA	98 / 01	**PD/550**		**PD/692**	Sumitomo	
ALTIMA	01 /	**PD/728**		**PD/585**		
ALTIMA	05 / 06	**PD/638**		**PD/585**		
ALTIMA	96 / 01	**PD/700**		**PD/692**		
ALTIMA	02 / 05	**PD/728**		**PD/585**		
ALTIMA	07 / 08	**PD/700**		**PD/1025**		
ALTIMA SLE	13 /	**PD/1430**				
ALTIMA 2.4L	96 / 01	**PD/550**				
ALTIMA SE-R	05 / 06	**PD/638**		**PD/585**		
ALTIMA SE-R	07 / 08	**PD/700**		**PD/1025**		
APRIO	07 / 09	**PD/338**				Sin sensor eléctrico
ARMADA	12 /	**PD/1390**				
ARMADA 5.6L	04 / 06	**PD/1019**		**PD/802**		
ATLEON 110.35 / 120.35 4x2		**PD/208**				
BLUEBIRD		**PD/453**	Akebono			

MODEL / *MODELO*	YEAR - *AÑO*	FRONT *DELANTERA*	SYSTEM *SISTEMA*	REAR *TRASERA*	SYSTEM *SISTEMA*	OBS.
NISSAN						
BLUEBIRD 2.0 i SLX / SW / TD	88 /	**PD/428**	Akebono			
BLUEBIRD 2.4 i SLX - SW	93 /	**PD/428**	Akebono			
CABSTAR 3.5 TON 3.8L	08 / 10	**PD/188-A**				
CABSTAR 28.11	06 /	**PD/1405-A**				
CABSTAR 35.13	06 /	**PD/1405-A**				
CABSTAR 35.15	06 /	**PD/1405-A**				
CABSTAR 2.5 4x2 4.5 TON	06 /	**PD/1418-A**				
CABSTAR 3.0 4x2 4.5 TON	06 /	**PD/1418-A**				
CABSTAR 40				**1478**		
DATSUN	71 / 84	**PD/587**				
EBRO 2.8 F250-275	82 /	**PD/108**	Bendix			
EBRO 3.0 F350	90 / 98	**PD/108**	Bendix			
FRONTIER 2.4L	06 / 08	**PD/811**		**PD/1072**		
FRONTIER 2.4L / 3.3L	01 / 04	**PD/427**				
FRONTIER 2.5 DCI	07-05 /	**PD/1014**				
FRONTIER 2.5 DCI 4WD	07-05 /	**PD/1014**				
FRONTIER 4.0L	08 / 10	**PD/811**		**PD/1072**		
FRONTIER 2.5	01 /	**PD/427**	Akebono	**NI/175-CP**	Akebono	
FRONTIER 2.8 D	10-04 /	**PD/1014**				
FRONTIER 2.8 TDI (Brasileira)	02 /	**PD/427**	Akebono	**NI/174-CP**		Freio traseiro Ø295x50mm
FRONTIER 2.8 TDI (Brasileira)	01 /	**PD/427**	Akebono	**NI/175-CP**	Akebono	
FRONTIER 2WD	98 / 04	**PD/534**		**NI/174-CP**		Freio traseiro Ø295x50mm
FRONTIER 2WD	98 / 04	**PD/427**	Akebono	**NI/174-CP**		Freio traseiro Ø295x50mm
FRONTIER 2WD	03 / 04	**PD/534**				
FRONTIER 4WD	98 / 04	**PD/534**		**NI/174-CP**		Freio traseiro Ø295x50mm
FRONTIER 4WD	98 / 04	**PD/427**	Akebono	**NI/174-CP**		Freio traseiro Ø295x50mm
FRONTIER 4WD	03 / 04	**PD/534**				
FRONTIER 4.0 4WD	12-05 /	**PD/1014**				
FRONTIER 4.0 D	12-05 / 11-09	**PD/1014**				
FRONTIER SEL	08 /	**PD/811**	Tokico	**PD/1072**		
HIKARI	88 / 92	**PD/544**				
HIKARI 1.6 L	88 / 92	**PD/75**	Sumitomo			
ICHI VAN 1.8L / 2.4L	87 / 94	**PD/136**				
L 35 3.0/ 4.0	82 /	**PD/108**	Bendix			
LIVINA 1.6 16V	10 /	**PD/672**				
LIVINA 1.8 16V	10 /	**PD/672**				
LIVINA GRAND 1.8 16V	10 /	**PD/672**		**NI/176-CP**		
LIVINA GRAND S 1.8 16V	10 /	**PD/672**		**NI/176-CP**		
LIVINA GRAND SL 1.8 16V	10 /	**PD/672**		**NI/176-CP**		
LIVINA S 1.6 16V	10 /	**PD/672**				
LIVINA S 1.8 16V	10 /	**PD/672**				
LIVINA SL 1.6 16V	10 /	**PD/672**				
LIVINA SL 1.8 16V	10 /	**PD/672**				
LIVINA X-GEAR 1.6 16V	10 /	**PD/672**				
LIVINA X-GEAR S 1.6 16V	10 /	**PD/672**				
LIVINA X-GEAR SL 1.6 16V	10 /	**PD/672**				
LIVINA X-GEAR SL 1.8 16V	10 /	**PD/672**				
LUCINO 2.0L	96 / 00					
LUCINO GSE 1.6L	95 / 00	**PD/1005**				
MARCH S 1.0 / 1.6 16V	12 /	**PD/1365**				
MARCH SR 1.6 16V	12 /	**PD/1365**				
MARCH SV 1.6 16V	12 /	**PD/1365**				
MARCH 1.0 CONFORTO	15 /	**PD/1365**				
MARCH 1.0 S	15 /	**PD/1365**				

MODEL / *MODELO*	YEAR - *AÑO*	FRONT *DELANTERA*	SYSTEM *SISTEMA*	REAR *TRASERA*	SYSTEM *SISTEMA*	OBS.
NISSAN						
MARCH 1.0 SV	15 /	**PD/1365**				
MARCH 1.6 S	15 /	**PD/1365**				
MARCH 1.6 SL	15 /	**PD/1365**				
MARCH 1.6 SV	15 /	**PD/1365**				
MAXIMA	89 / 90	**PD/550**				
MAXIMA	95 / 01			**PD/692**	Sumitomo	
MAXIMA	97 /			**PD/401**	Akebono	
MAXIMA	00 / 03	**PD/728**				
MAXIMA	04 / 07	**PD/638**		**PD/585**		
MAXIMA 3.0L	91 / 93	**PD/700**				
MAXIMA 3.0L	95 / 99	**PD/700**		**PD/692**		
MAXIMA 3.5L	00 / 03	**PD/727**		**PD/692**		
MAXIMA 3.5L	04 / 08	**PD/638**		**PD/585**		
MAXIMA 3.5L	09 /			**PD/1025**		
MAXIMA USA 3.0L	85 / 90			**PD/684**		
MURANO	03 /	**PD/638**		**PD/585**		
MURANO 2.5 4x4	01-10 /	**PD/1014**				
MURANO 3.5L	04 / 09	**PD/638**		**PD/585**		
MURANO 3.5 4x4	10-08 /	**PD/1014**				
MURANO 3.5	11-07 /	**PD/1014**				
NAVARA	05 /	**PD/811**	Tokico			
NP 300 2.4L	09 / 10	**PD/427**				
NP 300 DTi 2.5L	09 / 10	**PD/427**				
NX-1600	90 / 94	**PD/532** **PD/660**	Sumitomo			
NX-1600 / 2000 XE / SE	90 / 94	**PD/393**	Sumitomo			
NX-2000 XE / SE	90 / 94	**PD/532** **PD/660**	Sumitomo			
PATHFINDER	96 / 01	**PD/561**		**NI/174-CP**		Freio traseiro Ø295x50mm
PATHFINDER	01 / 04	**PD/562**		**NI/174-CP**		Freio traseiro Ø295x50mm
PATHFINDER	90 / 97	**PD/428**	Akebono			
PATHFINDER	98 / 04	**PD/561**				
PATHFINDER	08 / 10	**PD/811**		**PD/1071**		
PATHFINDER 2.4 / 2.7D / 3.6 V6	92 /	**PD/427**	Akebono			
PATHFINDER 2.5 DCI	01-05 /	**PD/1014**				
PATHFINDER 2.5 DCI 4WD	03-05 /	**PD/1014**				
PATHFINDER 3.0 i V6 FULL	93 /	**PD/427**	Akebono	**PD/440**	Sumitomo	
PATHFINDER 3.0 DCI	08-10 /	**PD/1014**				
PATHFINDER 3.3L	95 / 97	**PD/427**				
PATHFINDER 3.5L	02 / 04	**PD/561**				
PATHFINDER 4.0	01-05 /	**PD/1014**				
PATHFINDER 4.0L	05 / 07	**PD/811**		**PD/1071**		
PATHFINDER 4.0 4WD	09-05 /	**PD/1014**				
PATHFINDER ARMADA 5.6L	04 / 08	**PD/1019**		**PD/802**		
PATHFINDER	05 /	**PD/811**	Tokico			
PICK UP 720	89 / 93	**PD/136**				
PICK UP 720 1.8L	78 / 88	**PD/587**				
PICK UP D21	95 / 97	**PD/428**				
PICK UP D21	98 / 08	**PD/427**				
PICK UP D21 2.4L	94 /	**PD/428**				
PICK UP D21 USA V6	86 / 96	**PD/427**				
PICK-UP 720	90 / 94	**PD/428**	Akebono			
PICK-UP KING CAB 2.0 / 2.4i DX / STD	/ 93	**PD/428**	Akebono			
PICK-UP KING CAB 2.5 D DX / STD	/ 93	**PD/428**	Akebono			

MODEL / *MODELO*	YEAR - *AÑO*	FRONT *DELANTERA*	SYSTEM *SISTEMA*	REAR *TRASERA*	SYSTEM *SISTEMA*	OBS.
NISSAN						
PLATINA	02 / 09	**PD/338-A**				
PLATINA	02 / 09	**PD/338**				
PRIMASTAR VAN / BOX DCI 80	03-01 /	**PD/1387**				
PRIMASTAR VAN / BOX DCI 100	03-01 /	**PD/1387**				
PRIMASTAR VAN / BOX DCI 115	09-08 /	**PD/1387**				
PRIMASTAR VAN / BOX DCI 140	07-03 /	**PD/1387**				
PRIMASTAR VAN / BOX DCI 150	09-06 /	**PD/1387**				
PRIMASTAR VAN / BOX DCI 2.0	03-01 /	**PD/1387**				
PRIMERA 1.6i 16V	90 /	**PD/453**	Akebono			
PRIMERA 1.6i Van / 2.0D Van / 2.0i Van	92 /	**PD/453**	Akebono			
PRIMERA 2.0 D LX / SLX / SE	90 / 95	**PD/453**	Akebono			
PRIMERA 2.0i 16V GS / LS / LX / SGX	90 / 95	**PD/453**	Akebono			
PRIMERA 2.0i 16V GT	90 /	**PD/453**	Akebono			
QUEST	03	**PD/536**				
QUEST	04 /	**PD/562**		**PD/585**		
QUEST	04 / 09	**PD/561**		**PD/585**		
QUEST	11 /			**PD/1400**		
QUEST 3.0L / 3.3L	97 / 03	**PD/555**				
ROGUE 2.5L	08 / 09			**PD/1025**		
SAKURA	82 / 84	**PD/587**				
SAMURAI	81 / 84	**PD/587**				
SAMURAY 1.5 /1.6 L Turbo	85 / 87	**PD/75**	Sumitomo			
SENTRA	00 / 01	**PD/550**		**PD/692**	Sumitomo	
SENTRA	01 / 06	**PD/453**	Sumitomo			
SENTRA	07 /	**PD/728**		**NI/176-CP**		
SENTRA	01 /	**PD/453**		**PD/692**		
SENTRA 1.6L	92 / 92	**PD/532** **PD/660**				
SENTRA 2.5L	02 / 06	**PD/700**		**PD/741**		
SENTRA 1.4	91 / 96	**PD/532** **PD/660**	Sumitomo			
SENTRA 1.4 / 1.6 16V	91 / 96	**PD/393**	Sumitomo			
SENTRA 1.6 16V	91 / 96	**PD/532** **PD/660**	Sumitomo			
SENTRA 1.8 / 2.0	04 / 07			**NI/177-CP**	Sumitomo	Freio traseiro Ø 203x35mm
SENTRA 2.0	86 / 90	**PD/75**	Sumitomo			
SENTRA CUSTOM / EMOTION 2.0L	07 / 09	**PD/727**				
SENTRA GSS 2.0L	96 / 00			**PD/564**		
SENTRA GST	96 / 00	**PD/1005**				
SENTRA GSX	96 / 00	**PD/1005**		**PD/564**		
SENTRA PREMIUM / LUXURY	07 / 09	**PD/727**				
SENTRA SE / XE 1.8L	01 / 06	**PD/453**				
SENTRA SE 2.0L	01 /	**PD/453**		**PD/692**		
SENTRA SE-R	07 / 09			**PD/1025**	Caliper Brembo	
SENTRA SE-R 2.5L	02 / 06			**PD/741**	Caliper Brembo	
SENTRA 1.8L	04 / 06	**PD/453**	Sumitomo			
SENTRA 2.0 S MT	15 /	**PD/728**		**PD/585**		
SENTRA 2.0 SV CVT	15 /	**PD/728**		**PD/585**		
SERENA 1.6 / 2.0 Di 16V L / LX / SLX	92 /	**PD/446**	Girling			
SERENA 2.3 L / SGX / SLX	94 /	**PD/446**	Girling			
SUNNY 1.3 / 1.4 / 1.5	86 / 90	**PD/75**	Sumitomo			
TERRANO 2.7 TD	87 /	**PD/427**	Akebono			
TERRANO 3.0 V6	88 /	**PD/427**	Akebono			
TERRANO D-22 4x4		**PD/534**				
TERRANO II 2.4/ 2.7 TDI	96 /	**PD/446**	Girling			

MODEL / *MODELO*	YEAR - *AÑO*	FRONT *DELANTERA*	SYSTEM *SISTEMA*	REAR *TRASERA*	SYSTEM *SISTEMA*	OBS.
NISSAN						
TERRANO II 2.4i / 2.7 TD / Pick-up	96 /	**PD/427**	Akebono			
TERRANO II 2.4i / 2.7 Turbo ST	93 /	**PD/446**	Girling			
TIDA	06 /	**PD/672**				
TIIDA HATCHBACK 1.8L	07 / 09	**PD/672**				
TIIDA HATCHBACK 1.8L	10 /	**PD/728**	Akebono	**PD/585**		
TIIDA SEDAN	08 / 09	**PD/672**				
TITAN	08 / 10			**PD/802**		
TITAN	12-11 /	**PD/1390**				
TITAN 5.6L	04 / 07	**PD/1019**		**PD/802**		
TRADE 3.0	97 /	**PD/108**	Bendix			
TSUBAME 1.6L	93 / 04	**PD/532** **PD/660**				
TSURU GS	92 / 09	**PD/532** **PD/660**				
TSURU GSR	93 / 96	**PD/1036**		**PD/1037**		
TSURU I 1.5 L	84 / 87	**PD/75**	Sumitomo			
TSURU I / II 1.6 L	87 / 91	**PD/75**	Sumitomo			
TSURU TSURU I	84 / 87	**PD/544**				
TSURU TSURU II	88 / 92	**PD/75**				
UD - 1200	94 / 05	**PD/1006**		**PD/1006**		
UD - 1300	05 / 07	**PD/1006**				
UD - 1400	94	**PD/656**				
UD - 1400	94 / 08	**PD/1006**				
URVAN	02 / 08	**PD/597**				
URVAN 2.4L	00 / 01	**PD/427**				
VANETTE	90 / 94	**PD/428**	Akebono			
VANETTE CARGO 1.6 i / 2.3 D Furgon	95 /	**PD/446**	Girling			
VANETTE FURGON	95 /	**PD/428**	Akebono			
VERSA	13 /	**PD/1365**				
VERSA 1.6	12 /	**PD/1365**				
VERSA 1.6 L	08 / 10	**PD/672**				
VERSA 1.8 L	07 / 09	**PD/728**				
XTERRA	00 / 02	**PD/536**		**NI/174-CP**		Freio traseiro Ø295x50mm
XTERRA	03 / 04	**PD/534**		**NI/174-CP**		Freio traseiro Ø295x50mm
XTERRA	11 /	**PD/1390**				
X-TERRA	06 / 08	**PD/811**		**PD/1072**		
X-TERRA 2.4L / 3.3L	00 / 04	**PD/536**				
X-TERRA 4.0L	05 / 06	**PD/811**		**PD/1071**		
XTERRA - 4x2	02 / 03	**PD/427**	Akebono	**NI/174-CP**		Freio traseiro Ø295x50mm
XTERRA 4X4	03 /	**PD/534**		**NI/174-CP**		
XTERRA	05 /	**PD/811**	Tokico	**PD/1072**		
X-TRAIL	01 / 04	**PD/561**				
X-TRAIL 2.5L	02 / 09	**PD/561**		**PD/585**		

NISSAN / U.D.						
4R 82 / 85 / 95 / 105 /106 / 111 / 4RA	70 / 73	**NN/40/1**		**NN/41/1**		Bus
4R 82 / 94 / 104 / 110	67 / 69	**NN/40/1**		**NN/41/1**		Bus
5R 95 / 105 / 106 / 111 / 5RA	71 / 73	**NN/40/1**		**NN/41/1**		Bus
5TC 81	67 / 68	**NN/40/1**		**NN/41/1**		
5TC 81T	68 / 71	**NN/40/1**		**NN/41/1**		
5TVC 10 / 11	69 / 71	**NN/40/1**		**NN/41/1**		
5TWDC 10 / 11	67 / 70	**NN/40/1**		**NN/41/1**		Third axle NN/40/1
6R 110, 6RA	67 / 68			**NN/41/1**		Bus
6TC 80	66 / 68	**NN/40/1**		**NN/41/1**		
6TC 81T	68 / 71	**NN/40/1**		**NN/41/1**		

MODEL / *MODELO*	YEAR - *AÑO*	FRONT *DELANTERA*	SYSTEM *SISTEMA*	REAR *TRASERA*	SYSTEM *SISTEMA*	OBS.
NISSAN / U.D.						
6TVC 11	70 / 71	**NN/40/1**		**NN/41/1**		
6TVC 11T	70 / 71	**NN/40/1**		**NN/41/1**		
6TW 12 / 13	68 / 72	**NN/40/1**		**NN/41/1**		Third axle NN/41/1
6TW 12T / 13T	70 / 72	**NN/40/1**		**NN/41/1**		Third axle NN/41/1
6TWC 13	67 / 72	**NN/40/1**		**NN/41/1**		Third axle NN/41/1
6TWC 13T	70 / 71	**NN/40/1**		**NN/41/1**		Third axle NN/41/1
6TWDC 14 / 15	67 / 71	**NN/40/1**		**NN/41/1**		Third axle NN/40/1
6TWF 12T	69 / 70			**NN/41/1**		Third axle NN/41/1
6TWF 12T	70 / 73			**NN/41/1**		Third axle NN/41/1
8TC 81T	70 / 72	**NN/40/1**		**NN/41/1**		
8TVC 11T	70 / 71					
8TVC 11T	70 / 71	**NN/40/1**		**NN/41/1**		
CD 240 CTF	96 /	**F/787**				
CD 30-53	70 / 84	**NN/40/1**		**NN/41/1**		Third axle NN/40/1
CD 320 / 450 / 510 / 520	90 /			**F/804**		
CD 32A / 45A&B / 52A&B / 53A&B / 55A&B	94 /			**F/803**		Third axle F/804
CD 45 / 53 / 55	94 /	**F/803**		**F/804**		Third axle F/ 804
CD 46 / 53 / 54	84 / 89			**F/804**		
CD 46 / 47 / 53 / 54	87 / 89	**F/803**				
CF 30 / 45 / 46	78 /			**NN/41/1**		
CG 320 / 450 / 520	90 /	**NN/60/1**				
CG 45 / 52 / 53 / 55	94 /	**1410**				
CGA 45	87 / 88	**NN/40/1**		**NN/41/1**		
CGA 46	89 / 94	**F/803**		**F/804**		
CK 11	73 / 83	**NN/40/1**		**NN/41/1**		
CK 11 / 15 / 20 / 30 / 31	71 / 84	**NN/40/1**		**NN/41/1**		
CK 290 CTA	93 /	**F/787**				
CK 30	73 / 83	**NN/40/1**		**NN/41/1**		
CK 30 / 40 / 45 / 50 / 60 / 66	71 / 81	**NN/40/1**		**NN/41/1**		
CK 31	84 / 86			**NN/41/1**		
CK 31G / L	86 / 89	**F/803**		**F/804**		
CK 40	87 / 89	**NN/40/1**		**NN/41/1**		
CK 40	73 / 83	**NN/40/1**		**NN/41/1**		
CK 45 / 46 / 50 / 51 / 60 / 66	81 / 86			**NN/41/1**		
CK 45 / 46 / 54 / 66 / 67	86 / 89			**F/804**		
CK 450	90 / 95	**F/803**		**F/804**		
CK 450 / 520 / 540 / 610 / 620	90 /	**F/803**				
CK 451 / 531 / 541 / 551 / 631	95 /			**F/804**		
CK 50	73 / 83	**NN/40/1**				
CK 52	95 /			**F/804**		
CKA 44	87 / 89	**NN/40/1**		**NN/41/1**		
CKA 45	87 / 88	**NN/40/1**		**NN/41/1**		
CKA 46	89 / 94	**F/803**		**F/804**		
CKB 21	87 /			**NN/41/1**		
CKB 450	91 / 93	**F/803**		**F/804**		
CKB 450	93 /			**F/937**		
CL 80	85 / 86	**1410**		**1434**		
CL 80 / 87 / 88	86 /	**1410**				
CM 12E	91 /	**F/783**		**F/784**		4 x 2
CM 12L	91 /	**F/783**		**F/784**		4 x 2
CM 14E	91 /	**F/783**		**F/784**		4 x 2
CM 14L	91 /	**F/783**		**F/784**		4 x 2
CM 16E	91 /	**F/783**		**F/784**		4 x 2
CM 16F	91 /	**F/783**		**F/784**		4 x 2

MODEL / *MODELO*	YEAR - *AÑO*	FRONT *DELANTERA*	SYSTEM *SISTEMA*	REAR *TRASERA*	SYSTEM *SISTEMA*	OBS.
NISSAN / U.D.						
CM 16N	91 /	**F/783**		**F/784**		4 x 2
CM 50				**F/1138**		
CM 60				**F/1138**		
CM 160		**1410**				
CM 160 / CM 180				**F/1073**		
CM 180		**1410**				
CMA		**1464**		**1464**		
CMA 83	87 / 90	**1410**		**1434**		
CMA 87	89 / 97	**1410**				
CMA 87	89 / 97			**F/1073**		
CMB 87		**1410**				
CME 87	89	**1410**		**1434**		
CMF 87F / L	89 / 97			**F/1073**		
CMF 87L	89 / 97	**1410**				
CMF 88	88 /	**1410**				
CMF 88F	92 / 96	**1410**				
CMF 88F / H / L	89 / 97			**F/1073**		
CMF 88H	92 / 96	**1410**				
CMF 88K	92 / 96	**1410**				
CMF 88L	92 / 96	**1410**				
CMF 89H	88 /	**1410**				
CP 87 / 88	88 /	**F/783**		**F/784**		
CPB 12	87 /	**F/783**		**F/784**		
CPB 12 Wide & Turbo	86 / 02-89	**F/783**		**F/784**		
CPB 15	95 /			**F/804**		
CPB 87G	89 / 93	**F/783**		**F/784**		
CPB 87L	89 / 93	**F/783**		**F/784**		
CPB 87N	89 / 93	**F/783**		**F/784**		
CPB 88	91 /	**NN/40/1**				
CPB 88	91 /	**F/783**		**F/784**		
CPC 14	89 / 94	**F/803**		**F/804**		
CPC 15F / H / K	90 / 95	**F/803**		**F/804**		
CV 30-60	70 / 84	**NN/40/1**		**NN/41/1**		
CV 32 / 45 / 63	93 /	**F/803**		**F/804**		
CV 320 / 450 / 520 / 620	90 / 95	**F/803**		**F/804**		
CV 320 / 450 / 520 / 620	90 / 95	**F/803**				
CV 41	73 / 83	**NN/40/1**		**NN/41/1**		
CV 46 / 51 / 53 / 54 / 66	84 / 87			**F/804**		
CV 46 / 47 / 54 / 66	87 / 89	**F/803**		**F/804**		
CW 240	95 /			**F/804**		
CW 250	95 /			**F/804**		
CW 290 HDN	93 /	**F/787**				
CW 290 HTA	93 /	**F/787**				
CW 290 HTF	93 /	**F/787**				
CW 290 PHN	93 /	**F/787**				
CW 290 PPA	93 /	**F/787**				6 X 4
CW 350 HTA	93 /	**F/787**				
CW 350 HTF	93 /	**F/787**				6 X 4
CW 380	99 /			**F/937**		
CW 380	99 /			**F/804**		
CW 40	73 / 83	**NN/40/1**		**NN/41/1**		
CW 40 / 45 / 50 /51 / 52 / 60	72 / 81	**NN/40/1**		**NN/41/1**		Third axle NN/41/1
CW 41H	73 / 83	**NN/40/1**		**NN/41/1**		
CW 45 / 52 / 53 / 55 / 63	90 /	**F/ 803**		**F/ 804**		Third axle F/ 804

MODEL / *MODELO*	YEAR - *AÑO*	FRONT *DELANTERA*	SYSTEM *SISTEMA*	REAR *TRASERA*	SYSTEM *SISTEMA*	OBS.
NISSAN / U.D.						
CW 45A	73 / 83	**NN/40/1**		**NN/41/1**		
CW 46 HDN	89 /	**F/787**		**F/788**		6 X 4
CW 46 HMF	89 /	**F/787**		**F/788**		6 X 4
CW 46 HTA	89 /	**F/787**		**F/788**		6 X 4
CW 46 HTF	89 /	**F/787**		**F/788**		6 X 4
CW 46 PAA	89 /	**F/787**		**F/788**		6 X 4
CW 46 PAN	89 /	**F/787**		**F/788**		6 X 4
CW 46 / 53 / 54 / 66	84 / 89			**F/804**		Third axle F/804
CW 47 HDN	89 /	**F/787**		**F/788**		6 X 4
CW 47 HTA	89 /	**F/787**		**F/788**		6 X 4
CW 47 HTF	89 /	**F/787**		**F/788**		6 X 4
CW 47 PAA	89 /	**F/787**		**F/788**		6 X 4
CW 47 PAF	89 /	**F/787**		**F/788**		6 X 4
CW 47 PAN	89 /	**F/787**		**F/788**		6 X 4
CW 50	73 / 83	**NN/40/1**		**NN/41/1**		
CW 50 / 51 / 60 / 61	72 / 81	**NN/40/1**		**NN/41/1**		Third axle NN/41/1
CW 51 / 52 / 54 / 61 / 66 / 67	81 /			**NN/41/1**		Third axle NN/41/1
CW 510 / 520 / 530 / 540 / 610 / 620 / 631	90 /	**F/803**		**F/804**		
CW 510 / 520 / 530 / 610 / 620	90 /	**F/803**		**F/804**		Third axle F/ 804
CW 510 / 540 / 620 / 631	90 /	**F/803**		**F/804**		Third axle F/ 804
CW 53 / 66	83 / 84			**NN/41/1**		Third axle NN/41/1
CW 55 HTF	89 /	**F/787**		**F/788**		6 X 4
CW 56 HTF	89 /	**F/787**		**F/788**		6 X 4
CWA 300	92 / 96			**F/937**		
CWA 300	92 / 96	**F/803**		**F/804**		
CWA 45	87 / 88	**NN/40/1**		**NN/41/1**		
CWA 46	89 / 94	**F/803**		**F/804**		
CWA 55	82 /	**NN/40/1**		**NN/41/1**		
CWA 70	86 / 88	**NN/40/1**		**NN/41/1**		
CWA 78HTM	86 / 88	**NN/40/1**		**NN/41/1**		
CWB 320	96 /			**F/937**		
CWB 320	96 /			**F/804**		
CWB 350	96 /			**F/937**		
CWB 350	96 /			**F/804**		
CWB 450	92 / 96			**F/937**		
CWB 450	92 / 96	**F/803**		**F/804**		
CWB 452				**F/937**		
CWB 455				**F/937**		
CZ 50 / 51 /54 / 520	78 /			**NN/41/1**		Third axle NN/41/1
DA 50T	81 / 82	**NN/40/1**		**NN/41/1**		Bus
DA 66U / 67UE	84 /			**NN/41/1**		Bus / third axle NN/41/1
GA 66T	84 /			**NN/41/1**		Bus
KG 30R	/ 84	**NN/40/1**		**NN/41/1**		Third axle NN/41/1
KG 45S	84 /	**NN/40/1**		**NN/41/1**		Third axle NN/41/1
KG 50 / 51T	/ 84			**NN/41/1**		Third axle NN/41/1
KG 52/ 53T	84 / 87			**NN/41/1**		Third axle NN/41/1
KK 20	/ 84	**NN/40/1**		**NN/41/1**		
KK 31H	84 /	**NN/40/1**		**NN/41/1**		
KW 30H	84 /	**NN/40/1**		**NN/41/1**		Third axle NN/41/1
KW 30M	/ 84	**NN/40/1**		**NN/41/1**		Third axle NN/41/1
LG 46 / 54	86 / 89	**F/783**				
LK		**1464**		**1464**		
LK 235	99 /	**1410**				
LK 235	99 /			**F/1073**		

MODEL / *MODELO*	YEAR - *AÑO*	FRONT *DELANTERA*	SYSTEM *SISTEMA*	REAR *TRASERA*	SYSTEM *SISTEMA*	OBS.
NISSAN / U.D.						
LW 45	79 / 82	**NN/40/1**				
LW 46	79 / 80	**NN/40/1**				
MK		**1464**		**1464**		
MK 120 / 210 / 211	93 /	**1410**				
MK 180	95 /	**1410**				
MK 180	95 /			**F/1073**		
MK 185	95 /	**1410**				
MK 235	95 /	**1410**				
MK 235	95 /			**F/1073**		
MK 250 / 251 / 260	93 /	**1410**				
NK		**1464**		**1464**		
NKB 210				**F/1073**		
PK 220	98 /			**F/937**		
PK 225	95 /			**F/937**		
PK 240				**F/937**		
PK 245	03 /			**F/937**		
PK 250				**F/937**		
PK 255	03 /			**F/804**		
PK 265	03 /			**F/937**		
PK 310		**F/803**				
PR 95 / 105 / 106 / 111 / PRA	70 / 73	**NN/40/1**		**NN/41/1**		Bus
PT 81	69 / 71	**NN/40/1**		**NN/41/1**		
PT 81T	69 / 72	**NN/40/1**		**NN/41/1**		
PTC 81	67 / 71	**NN/40/1**		**NN/41/1**		
PTC 81T	70 / 71	**NN/40/1**		**NN/41/1**		
PTF 30	71 / 79	**NN/41/1**				
PTF 80 / 81	71 / 72	**NN/40/1**		**NN/41/1**		
RA 46/ 53	85 / 88			**F/804**		Bus
RA 50 / 51	73 / 82	**NN/40/1**		**NN/41/1**		Bus
RA 520 / 530 / 531 / 550	90 /	**F/803**		**F/804**		Bus
RA 520 / 530 / 531 / 550	90 /	**F/803**		**F/804**		
RD 620 / 630	90 /	**NN/60/1**		**F/784**		Bus
RE 8	90 /	**F/803**				
RM 81	84 /	**1410**		**1434**		Bus
RP 210 / 211 / 250	90 /	**F/803**		**F/804**		Bus
RP 210 / 211 / 250	90 /	**F/803**		**F/804**		
RP 80	86 /			**F/804**		Bus
RX 102	67 / 69	**NN/40/1**		**NN/41/1**		Bus
SP 210	92 /			**F/804**		Bus
SP 210	92 /			**F/804**		
T 80T	69 / 70	**NN/40/1**		**NN/41/1**		
T 81	69 / 71	**NN/40/1**		**NN/41/1**		
TC 81	67 / 71	**NN/40/1**		**NN/41/1**		
TF 30	71 / 79	**NN/41/1**				
TK 20	72 / 79	**NN/40/1**		**NN/41/1**		
TW 50	72 / 80	**NN/40/1**		**NN/41/1**		Third axle NN/41/1
TW 50 / 51	72 / 79	**NN/40/1**		**NN/41/1**		Third axle NN/41/1
TW 53	81 /	**NN/40/1**		**NN/41/1**		Third axle NN/41/1
TZ 50	72 / 80			**NN/41/1**		Third axle NN/41/1
TZ 52	81 /			**NN/41/1**		Third axle NN/41/1
TZA 52K	85 /			**NN/41/1**		
TZA 52P	85 /			**NN/41/1**		
U / UA 20 / 30 / 31 / 35 / 36	72 / 82	**NN/40/1**		**NN/41/1**		Bus
U / UA 32 / 33 / 50	84 /			**F/804**		Bus

MODEL / *MODELO*	YEAR - *AÑO*	FRONT *DELANTERA*	SYSTEM *SISTEMA*	REAR *TRASERA*	SYSTEM *SISTEMA*	OBS.
NISSAN / U.D.						
UA 440 / 460 / 510 / 520 / 521	90 /	**F/803**		**F/804**		Bus
UA 440 / 460 / 510 / 520 / 521	90 /	**F/803**		**F/804**		
UD 1800	89 / 82	**1410**				
UD 80	97 /	**F/783**		**F/784**		4 x 2
UD 85	97 /	**F/783**		**F/784**		4 x 2
UD 90	97 /	**F/783**		**F/784**		4 x 2
UD 95	97 /	**F/783**		**F/784**		4 x 2
UD 440		**F/1121**		**F/1122**		
V8RA 110 / 112	67 / 68			**NN/41/1**		Bus
V8RA 110 / 120	68 / 72	**NN/40/1**		**NN/41/1**		Bus
WD 15 / 151	71 /	**NN/41/1**		**NN/41/1**		
NOMA						
3° EIXO	/ 78			**4195-B**		
3° EIXO	79 /			**4514-F** **4514-G**	Bendix	
CARRETA	Todos			**CA/32**	Master	
OLDSMOBILE						
98	85 / 90	**PD/499**	Bendix			
98	91 / 93	**PD/609**				
88 DELTA	86 / 88	**PD/499**	Bendix			
88 ROYALE	89 / 91	**PD/499**	Bendix			
88 ROYALE	92 / 93	**PD/609**				
ACHIEVA	96 / 98	**PD/508**				
ALERO	99 / 01	**PD/714**				
ALERO	02 / 04	**PD/772**				
AURORA	97 / 99	**PD/564**				
BRAVADA	98 / 01			**PD/615**		
CALAIS	85 / 90	**PD/546**				
CUTLASS	98	**PD/508**				
CUTLASS	97	**PD/567**				
CUTLASS	97 / 99	**PD/714**				
CUTLASS CIERA	85 / 96	**PD/499**	Bendix			
CUTLASS CIERA	82 / 89	**PD/540**				
CUTLASS SUPREME	91 / 97	**PD/519**				
FIRENZA	85 / 88	**PD/546**				
OMEGA	81 / 84	**PD/540**				
SOLHOUETTE APV	90 / 91	**PD/499**	Bendix			
OPEL - TODO TERRENO (4WD)						
FRONTERA 2.0 GL Sport / GLS Sport	96 / 98	**PD/445**	Sumitomo			
FRONTERA 2.0 I Sport	94 / 98	**PD/445**	Sumitomo			
FRONTERA 2.2	95 / 98	**PD/445**	Sumitomo			
FRONTERA 2.3 D / Wagon / TD / DTR 4x4	94 / 98	**PD/445**	Sumitomo			
FRONTERA 2.4 I / 2.8 TDI	94 / 98	**PD/445**	Sumitomo			
FRONTERA 2.5 D / 2.8 D	96 / 98	**PD/445**	Sumitomo			
MONTERREY 3.1 TD LS/ RS/ LTD	/ 98	**PD/445**	Sumitomo			
MONTERREY 3.2 I V6 24V LTD/ RS	/ 98	**PD/445**	Sumitomo			
OPTARE						
ALERO	09-01 /	**PD/192-A**	Wabco			
METRORIDER		**PD/154**	Meritor	**PD/154**	Meritor	
NOUVELLE	96 /	**PD/104**	Teves	**PD/104**	Teves	

MODEL / *MODELO*	YEAR - *AÑO*	FRONT *DELANTERA*	SYSTEM *SISTEMA*	REAR *TRASERA*	SYSTEM *SISTEMA*	OBS.
OPTARE						
NOUVELLE SR		**PD/154**	Meritor	**PD/154**	Meritor	
SOLERA	02 /	**PD/120**	Knorr	**PD/120**	Knorr	
SOLO		**PD/154**	Meritor	**PD/154**	Meritor	
SOLO	02 /	**PD/124**	Wabco	**PD/124**	Wabco	
SOROCO	00 /	**PD/111-A**	Wabco	**PD/111-A**	Wabco	
SOROCO NT SPRINTER 413 CDI CHASSIS				**PD/659-A**	Teves	
STARRIDER	87 /	**PD/104**	Teves			
OTTO-DEUTZ (Demisa)						
DM-65				**TR/312**		
DM-90				**TR/312**		
PASTRE						
3° EIXO	83 /			**4514-F** **4515-G** **4515-C** **4515-G**	Bendix - - -	
CARRETA	83 /			**CA/32**	Master	
PRATTI - FRUEHAUF						
PRATTI - FRUEHAUF				**MB/142**		
PRATTI - FRUEHAUF				**AC/30**		
PERROT (WABCO)						
1000V-G / MAN - NEOPLAN				**PD/152**	Wabco	
1600V-G / DAF				**PD/168-A**	Wabco	
310 x 100,0 mm				**17096/099 00**		
325 x 100,0 mm				**17924/925 91**		
325 x 80,0 mm				**15732/733 00**		
325 x 97,0 mm				**15817/823 00**		
410 x 160,0 mm				**19849/850 00**		
410 x 220,0 mm				**19847/848 00**		2 x 19847 2 x 19699 4 x 19848
444F-O / IVECO				**PD/150-A**	Wabco	
444F-O / IVECO				**PD/360-A**	Wabco	
444F-O / IVECO				**PD/191-A**	Wabco	
446F-O / IVECO				**PD/420-A**	Wabco	
456F-O / DAF - IVECO				**PD/148**	Wabco	
456F-O / DAF - IVECO				**PD/148-A**	Wabco	
456F-O / IVECO				**PD/193-A**	Wabco	
500 x 180,0 mm				**19690 00 S/F**		without holes
IVECO				**PD/339-A**	Wabco	
IVECO				**PD/192-A**	Wabco	
MB - OPTARE - VOLKSWAGEN				**PD/111-A**	Wabco	
MB - OPTARE - VOLKSWAGEN				**PD/111**	Wabco	
PAN17 / DAF - IVECO - MAN - OPTARE - RENAULT				**PD/124**	Wabco	
PAN19-1 / S.A.E. - SAF - VOLVO				**PD/131**	Wabco	
PAN19-2 / DAF				**PD/194**	Wabco	
PAN19-2 / RENAULT				**PD/161**	Wabco	
PAN22 / FRUEHAUF - S.A.E. - SAF				**PD/197**	Wabco	
PAN22-1 / SAF				**PD/164**	Wabco	
PETERBILT						
220	08	**PD/144**		**PD/144**		

MODEL / *MODELO*	YEAR - *AÑO*	FRONT *DELANTERA*	SYSTEM *SISTEMA*	REAR *TRASERA*	SYSTEM *SISTEMA*	OBS.
PEUGEOT						
106	97 /	**PD/322-A**	Bendix			
106	97 /	**PD/363-A**	Girling			
106	97 /	**PD/364-A**	Teves			
106 1.0i	91 /	**PD/522-E**	Bendix	**PG/206-CP**	Bendix	Freio traseiro Ø164 x 32 mm
106 1.1i	91 /	**PD/522-E**	Bendix	**PG/206-CP**	Bendix	Freio traseiro Ø164 x 32 mm
106 1.3	94 /	**PD/522-E**	Bendix	**PG/206-CP**	Bendix	Freio traseiro Ø164 x 32 mm
106 1.3i RALLYE	91 / 96	**PD/522-E**	Bendix	**PG/206-CP**	Bendix	Freio traseiro Ø164 x 32 mm
106 1.4	95 /	**PD/364-A**	Teves	**PG/206-CP**	Bendix	Freio traseiro Ø164 x 32 mm
106 1.4 D	91 / 96	**PD/522-E**	Bendix	**PG/206-CP**	Bendix	Freio traseiro Ø164 x 32 mm
106 1.4i	91 /	**PD/522-E**	Bendix	**PG/206-CP**	Bendix	Freio traseiro Ø164 x 32 mm
106 1.5 D	91 /	**PD/522-E**	Bendix	**PG/206-CP**	Bendix	Freio traseiro Ø164 x 32 mm
106 1.6 16V	96 /	**PD/364-A**	Teves	**PD/465**	Bendix	
106 1.6i	91 / 96	**PD/522-E**	Bendix	**PD/465**	Bendix	
205 1.0	83 / 94			**PG/204-CPA**	Girling	Freio traseiro Ø180x32mm
205 1.1	83 / 94			**PG/204-CPA**	Girling	Freio traseiro Ø180x32mm
205 1.3	83 / 94			**PG/204-CPA**	Girling	Freio traseiro Ø180x32mm
205 1.4	83 / 94			**PG/204-CPA**	Girling	Freio traseiro Ø180x32mm
205 1.9 CTi / GTi	93 /	**PD/322-A**	Bendix	**PD/465**	Bendix	
205 1.9 CTi / GTi	93 /	**PD/363-A**	Girling	**PD/465**	Bendix	
205 1.9 CTI CABRIOLET	91 / 98			**PD/465**	Bendix	
205 1.9 GTI	91 / 98			**PD/465**	Bendix	
205 1.9 RALLYE	91 / 98			**PD/465**	Bendix	
205 GL / Gti / Cti	93 /	**PD/305-A**	Girling	**8017-S/F**		
205 GL / Gti / Cti	93 /	**PD/305-A**	Girling	**FI/90**		
205 GL / Gti / Cti	93 /	**PD/338** **PD/338-A**	Girling	**8017-S/F**		
205 GL / Gti / Cti	93 /	**PD/338** **PD/338-A**	Girling	**FI/90**		
205 GL/ GTi	93 /	**PD/363-A**	Girling			
205 JUNIOR 1.4 3P	94 /			**PG-203-CP**	Bendix	Freio traseiro Ø180x32mm
205 XS / XSI / JUNIOR	93 /	**PD/322-A**	Bendix			
206 1.0	01 /	**PD/435**	Bosch	**PG/202-CP**	Bosch	
206 1.0	99 / 01	**PD/412**	Bendix	**PG/202-CP**	Bosch	
206 1.4	05 /	**PD/435**	Bosch	**PG/202-CP**	Bosch	
206 1.4 XR / XR Pack / XS	99 /	**PD/412**	Bendix			
206 1.4L	00 / 02	**PD/412**				
206 1.6	01 /	**PD/435**	Bosch	**PG/202-CP**	Bosch	
206 1.6	99 / 01	**PD/412**	Bendix	**PG/202-CP**	Bosch	
206 1.6 16V	07-02 /	**PD/507**	Bosch	**PG/202-CP**	Bosch	
206 1.6 16V	07-02 /	**PD/505**	Bosch	**PG/202-CP**	Bosch	
206 1.6 16V CC	99 /	**PD/507**	Bosch	**PD/465**	Bendix	
206 1.6 16V RALLYE	01 /	**PD/507**	Bosch	**PD/465**	Bendix	
206 1.6 XR / XR Pack / XS	99 /	**PD/412**	Bendix			
206 1.9 XRD / XRD Pack	99 /	**PD/412**	Bendix			
206 2.0 16V CC	07-02 /	**PD/507**	Bosch	**PD/465**	Bendix	
206 2.0 16V CC	07-02 /	**PD/505**	Bosch	**PD/465**	Bendix	
206 2.0 16V S16	00 /	**PD/507**	Bosch	**PD/465**	Bendix	
206 2.0 GTI	99 /	**PD/507**	Bosch	**PD/465**	Bendix	
206 2.0 HDI	07-02 /	**PD/507**	Bosch	**PD/465**	Bendix	
206 CC / XS 1.6L	01 / 08	**PD/505**		**PD/465**		
206 SW 1.4	05 / 08	**PD/435**	Bosch	**PG/209-CPA**	Bosch	
206 SW 1.6	05 / 08	**PD/435**	Bosch	**PG/209-CPA**	Bosch	
206 X / XT	05 / 08	**PD/435**		**PD/465**		
206 XT	03 / 07	**PD/505**		**PD/465**		

MODEL / *MODELO*	YEAR - *AÑO*	FRONT *DELANTERA*	SYSTEM *SISTEMA*	REAR *TRASERA*	SYSTEM *SISTEMA*	OBS.
PEUGEOT						
206 XT	03 / 08	**PD/435**		**PD/465**		
207 1.6	08 /	**PD/411**	Girling			
207 COUPE CABRIOLET 1.6	07 /	**PD/435**	Bosch	**PD/465**	Bendix	
207 HATCH 1.6	07 /	**PD/435**	Bosch	**PD/465**	Bendix	
207 HATCH X-LINE FLEX 1.4	07 /	**PD/435**	Bosch	**PG/202-CP**	Bosch	
207 HATCH XR / SPORT FLEX 1.4	07 /	**PD/435**	Bosch	**PG/202-CP**	Bosch	
207 HATCH XS FLEX 1.6	07 /	**PD/435**	Bosch	**PD/465**	Bendix	
207 SEDAN PASSION XR / SPORT FLEX 1.4	07 /	**PD/435**	Bosch	**PG/202-CP**	Bosch	
207 SEDAN PASSION XS 1.8 / 2.0	07 /	**PD/435**	Bosch	**PD/465**	Bendix	
207 SEDAN PASSION XS FLEX 1.6	07 /	**PD/435**	Bosch	**PD/465**	Bendix	
207 SEDAN PASSION XS FLEX 1.8	07 /	**PD/435**	Bosch	**PD/465**	Bendix	
207 SW 2.0	07 /	**PD/435**	Bosch	**PD/465**	Bendix	
207 SW ESCAPADE FLEX 1.6	07 /	**PD/435**	Bosch	**PD/465**	Bendix	
207 SW XR / SPORT FLEX 1.4	07 /	**PD/435**	Bosch	**PG/202-CP**	Bosch	
207 SW XS FLEX 1.4	07 /	**PD/435**	Bosch	**PG/202-CP**	Bosch	
207 SW XS FLEX 1.6	07 /	**PD/435**	Bosch	**PD/465**	Bendix	
208 1.5 16V	13 /	**PD/85**	Teves	**CI/344-CPA**	Bosch	Freio traseiro Ø203x39mm
208 1.6 16V	13 /	**PD/505**	Bosch	**CI/344-CPA**	Bosch	Freio traseiro Ø203x39mm
306	95 /	**PD/322-A**	Bendix	**FI/91-S/F**		
306 1.4	97 /	**PD/412**	Bendix	**FI/91-S/F**		
306 1.4	95 /	**PD/364-A**	Teves			
306 1.6	93 /			**PG/204-CPA**	Girling	Freio traseiro Ø180x32mm
306 1.6 / 1.8 / 2.0	98 /	**PD/411** **PD/411-E**	Girling	**PD/362**	Girling	
306 1.6 / 1.8 / 2.0	98 /	**PD/411** **PD/411-E**	Girling	**PD/465**	Bendix	
306 1.6 XS / XR / ST / XT	95 /	**PD/364-A**	Teves			
306 1.8	98 /	**PD/364-A** **PD/411-E**	Teves Girling	**PG/204-CPA**	Girling	Freio traseiro Ø180x32mm
306 1.8 CABRIOLET	94 /			**PD/465**	Bendix	
306 1.8 XR / XT	95 /	**PD/364-A**	Teves			
306 1.9 XLD / XND / XRD	95 /	**PD/364-A**	Teves			
306 2.0	98 /	**PD/364-A** **PD/411-E**	Teves Girling	**PG/204-CPA**	Girling	Freio traseiro Ø180x32mm
306 2.0 16V GTi / XSi	95 /	**PD/391-A**	Girling	**PD/465**	Bendix	
306 2.0 CABRIOLET	94 /			**PD/465**	Bendix	
306 2.0 ST	95 /	**PD/391-A**	Girling	**PD/465**	Bendix	
306 2.0 ST	95 /	**PD/405-E**	Bendix	**PD/465**	Bendix	
306 2.0 Xsi Coupé	95 /	**PD/391-A**	Girling	**PD/465**	Bendix	
306 2.0 Xsi Coupé	95 /	**PD/405-E**	Bendix	**PD/465**	Bendix	
306 2.0i 16V GTI	95 /	**PD/405-E**	Girling	**PD/465**	Bendix	
306 2.0i 16V XSI	95 /	**PD/405-E**	Girling	**PD/465**	Bendix	
306 BREAK	98 /	**PD/364-A** **PD/411-E**	Teves Girling	**PD/465**	Bendix	
306 TRANS AUT 2.0L	98 / 02	**PD/364-A**		**PD/465**		
306 TRANS MAN 1.8L	97 / 02			**PD/465**		
307 1.4	03-02 /	**PD/505**	Bosch	**PD/362**	Girling	sem ESP
307 1.4 16V	02-04 /	**PD/505**	Bosch	**PD/362**	Girling	sem ESP
307 1.6	08-00 /	**PD/505**	Bosch	**PD/362**	Girling	sem ESP
307 1.6 HDI	02-04 /	**PD/505**	Bosch	**PD/362**	Girling	sem ESP
307 1.6i 16V	02 /	**PD/346**	Bosch	**PD/362**	Girling	
307 2.0 HDI	08-00 /	**PD/505**	Bosch	**PD/362**	Girling	sem ESP
307 2.0 HDI	02 /	**PD/346**	Bosch	**PD/362**	Girling	
307 2.0i 16V	02 /	**PD/346**	Bosch	**PD/362**	Girling	
307 SW	03 / 08	**PD/346**		**PD/59**		
307 XR / XS / XT 2.0L	03 / 08	**PD/505**		**PD/59**		

MODEL / *MODELO*	YEAR - *AÑO*	FRONT *DELANTERA*	SYSTEM *SISTEMA*	REAR *TRASERA*	SYSTEM *SISTEMA*	OBS.
PEUGEOT						
307 2.0 16V	04 /			**PD/1335**	Bosch	
308 CC 1.6 16V	06-09 /	**PD/1000**	Teves	**PD/1445**		
308 CC 1.6 HDI	06-09 /	**PD/1000**	Teves	**PD/1445**		
308 CC 2.0 HDI	04-09 /	**PD/1000**	Teves	**PD/1445**		
308 1.6I 16V	09-07 /	**PD/1470**	Bosch			
308 CC 1.6 16V	06-09 /	**PD/1470**	Bosch			
308 SW 2.0I 16V	09-07 /	**PD/1470**	Bosch			
404	67 / 81	**PD/313**	Girling	**8020**		
504	67 / 81	**PD/313**	Girling	**8020**		
405 GL	92 /	**PD/322-A**	Bendix	**PD/362**	Girling	
405 GL	92 /	**PD/322-A**	Bendix	**8124-S**		
405 GL	92 /		Girling	**8124-S**		
405 GL 1.6	93 / 00	**PD/322-A**	Bendix	**PG/207-CPA**	Bendix	Freio traseiro Ø228,6x42,0mm
405 GL 1.8	93 / 00	**PD/322-A**	Bendix	**PG/207-CPA**	Bendix	Freio traseiro Ø228,6x42,0mm
405 GL 2.0	93 / 00	**PD/322-A**	Bendix	**PG/207-CPA**	Bendix	Freio traseiro Ø228,6x42,0mm
405 GLi / SRi / STi / Mi 16V / T 16	92 /	**PD/326-A**	Girling	**PD/362**	Girling	
405 TRANS MAN / TRANS AUT 2.0L	97 / 99	**PD/326-A**		**PD/362**		
406 2.0 HDI	11-95 /			**PD/657-A**	Teves	
406 1.8i 16V SR / ST / Break	95 /	**PD/414-E**	Girling	**PD/425-A**	Teves	
406 1.9 D	95 /	**PD/414-E**	Girling	**PD/425-A**	Teves	
406 2.0	98 /	**PD/414-E**	Girling	**PD/425-A**	Teves	Rodado 14"
406 2.0 16V	95 /	**PD/405-E**	Girling			Aro 15"
406 2.0 16V ST/ SV/ 2.1 TD	99 /	**PD/405-E**	Bendix	**PD/425-A**	Teves	
406 2.0L / 3.0L	00 / 03	**PD/405-E**		**PD/425-A**		
407 1.6 16V HDI	04 /	**PD/1477-E**	Girling			
407 1.8 16V	04 /	**PD/1477-E**	Girling			
407 2.0 16V HDI	04 /	**PD/1477-E**	Girling			
407 2.0 HDI	04 /	**PD/1477-E**	Girling			
407 2.0 HDI 135 FAP	04 /	**PD/1345-E**	Lucas			
407 2.0I / 2.2I	04 /	**PD/1345-E**	Lucas			
407 3.0I V6	04 /	**PD/1345-E**	Lucas			
407 1.6 16V HDI	04 /	**PD/1477-E**				
407 1.8 16V	04 /	**PD/1477-E**				
407 2.0 16V HDI	04 /	**PD/1477-E**				
408 2.0 16V	11 /	**PD/1470**	Bosch	**PD/1338**	Bosch	
406 3.0L	01 / 05			**PD/425-A**		
504	82 / 93	**PD/312-A**	Bendix	**8020**		
504	82 / 93	**PD/311-A**	Girling	**8020**		
504	93 / 00	**PD/312-A**	Bendix	**PG-/205-CPA**		Freio traseiro Ø255,0x61,0mm
505	82 / 93	**PD/312-A**	Bendix	**8020**		
505	82 / 93	**PD/311-A**	Girling	**8020**		
504 SR / SRD / Pick-Up	92 /	**PD/47-RA-P**	Teves	**8020**		
505	93	**PD/312-A**	Bendix	**PG-/205-CPA**		Freio traseiro Ø255,0x61,0mm
505 GRD / Pick-up / Rural	82 / 93	**PD/311-A**	Girling			
505 I / TD	93 /	**PD/361-A**	Teves	**PD/468-A**	Girling	
505 SR / SRD / Pick-Up		**PD/47-RA-P**	Teves	**8020**		
508 1.6 THP 16V	11 /	**PD/1301**	Teves			
604 2.5 / 2.7 / 2.7i / 2.8i	89 /	**PD/361-A**	Teves	**PD/468-A**	Girling	
605 2.0i / 2.1	92 /	**PD/454-E**	Bendix	**PD/425-A**	Teves	
605 2.0i	06-89 / 09-99			**PD/657-A**	Teves	
607 2.9L / 3.0L	02 / 07			**PD/425-A**		
806	96 /	**PD/448-A**	Bendix			
3008 1.6 THP 16V	09 /	**PD/1000**	Teves	**PD/1445**		
3008 2.0 16V	09 /	**PD/1000**	Teves	**PD/1445**		

MODEL / *MODELO*	YEAR - *AÑO*	FRONT *DELANTERA*	SYSTEM *SISTEMA*	REAR *TRASERA*	SYSTEM *SISTEMA*	OBS.
PEUGEOT						
3008	10 /	**PD/1459**				
5008	10 /			**PD/1445**		
BOXER 1.9 D	00 / 02	**PD/369-B**	Girling	**FI/170-CPA**	Girling	Aro 15"
BOXER 1.9 D	94 / 99	**PD/358 PD/358-A**	Girling	**FI/170-CPA**	Girling	Aro 15"
BOXER 2.2 HDI 100 (BOX, BUS, CHASSIS)	06 /	**PD/1397-B**				
BOXER 2.2 HDI 120 (BOX, BUS, CHASSIS)	06 /	**PD/1397-B**				
BOXER 2.5 TD SERIE 1400	00 / 02	**PD/369-B**	Girling	**FI/170-CPA**	Girling	Aro 15"
BOXER 2.5 TD SERIE 1400	94 / 99	**PD/358 PD/358-A**	Girling	**FI/170-CPA**	Girling	Aro 15"
BOXER 2.5 TD SERIE 1800	00 / 02	**PD/438-B**	Girling	**FI/199-CPA**	Girling	Aro 16"
BOXER 2.5 TD SERIE 1800	94 / 99	**PD/422 PD/422-A**	Girling	**FI/199-CPA**	Girling	Aro 16"
BOXER 3.0 HDI 160 (BOX, BUS, CHASSIS)	06 /	**PD/1397-B**				
BOXER 30 2.2	06 /	**PD/1099-B**	Brembo			
BOXER 30 3.0 HDI	06 /	**PD/1099-B**	Brembo			
BOXER 33 2.2	06 /	**PD/1099-B**	Brembo			
BOXER 33 3.0 HDI	06 /	**PD/1099-B**	Brembo			
BOXER SERIE 290	04-02 / 04	**PD/498-A**	Bosch	**PD/501**	Bosch	Freio de mão **FI/196-CP**
BOXER SERIE 290	05 /	**PD/498-A**	Bosch	**PD/501**	Bosch	Freio de mão **FI/322-CP**
BOXER SERIE 330	04-02 / 04	**PD/498-A**	Bosch	**PD/501**	Bosch	Freio de mão **FI/196-CP**
BOXER SERIE 330	05 /	**PD/498-A**	Bosch	**PD/501**	Bosch	Freio de mão **FI/322-CP**
BOXER SERIE 350 - 2.2 Hdi	02 / 04	**PD/652-B**	Bosch	**PD/501**	Bosch	Freio de mão **FI/196-CP**
BOXER SERIE 350 - 2.2 Hdi	05 /	**PD/652-B**	Bosch	**PD/501**	Bosch	Freio de mão **FI/322-CP**
BOXER SERIE 350 - 2.8 Hdi	02 / 04	**PD/652-B**	Bosch	**PD/501**	Bosch	Freio de mão **FI/196-CP**
BOXER SERIE 350 - 2.8 Hdi	05 /	**PD/652-B**	Bosch	**PD/501**	Bosch	Freio de mão **FI/322-CP**
BOXER SERIE 350 - 2.8 Hdi 4x4	02 / 04	**PD/652-B**	Bosch	**PD/501**	Bosch	Freio de mão **FI/196-CP**
BOXER SERIE 350 - 2.8 Hdi 4x4	05 /	**PD/652-B**	Bosch	**PD/501**	Bosch	Freio de mão **FI/322-CP**
EXPERT 1.9 D	99 /	**PD/448-A**	Bendix			
GRANDRAID 1.6L / 1.6L HDI	07 / 09	**PD/411-E**				
HOGGAR ESCAPADE 1.6 16V	10 /	**PD/435**	Bosch	**PE/172-CPA**	Girling	
HOGGAR X-LINE 1.4 8V	10 /	**PD/435**	Bosch	**PE/172-CPA**	Girling	
HOGGAR XR 1.4 8V	10 /	**PD/435**	Bosch	**PE/172-CPA**	Girling	
MANAGER 3.0L	09 / 10			**PD/505**		
PARTNER 1.6L / 1.6L HDI	04 / 09	**PD/411-E**				
PARTNER 1.8	99 /	**PD/411-E**	Girling	**PE/172-CPA**	Girling	
PARTNER	98 /	**PD/411 PD/411-E**	Girling			
PARTNER 1.1 / 1.4	06-96 /	**PD/505**				
PARTNER 1.8	05-97 /	**PD/505**				
PARTNER 1.9 D	12-98 /	**PD/505**				
PARTNER 1 .9 D 4x4	02-00 /	**PD/505**				
PARTNER 2.0 HDI	04-04 /	**PD/505**				
PICK-UP 504 T4-B	90 /	**PD/312-A**	Bendix	**8020**		
PICK-UP 504 T5-B	90 /	**PD/312-A**	Bendix	**8020**		
PICK-UP T4B / T5B	90 /	**PD/312-A**	Bendix	**PG/201**		
RCZ 1.6 16V	03-10 /	**PD/1000**	Teves	**PD/1445**		
RCZ 2.0 HDI	03-10 /	**PD/1000**	Teves	**PD/1445**		

PLYMOUTH						
ACCLAIN	91 / 95	**PD/504**				
VOYAGER	91 / 95	**PD/504**				
GRAND VOYAGER	91 / 95	**PD/504**				
NEON	99 / 01	**PD/510**	Kelsey Hayes			
PROWLER	97 / 00	**PD/515**	Kelsey Hayes			

MODEL / *MODELO*	YEAR - *AÑO*	FRONT *DELANTERA*	SYSTEM *SISTEMA*	REAR *TRASERA*	SYSTEM *SISTEMA*	OBS.
PLYMOUTH						
PB 350 VOYAGER	83	**PD/537**				
300 SERIES	74 / 80	**PD/537**				
RELIANT HEAVY DUTY	83 / 87	**PD/543**				
CARAVELLE	85 / 87	**PD/543**				
SUNDANCE TURBO	87	**PD/543**				
ACCLAIN	91 / 92	**PD/553**				
VOYAGER	91 / 94	**PD/553**				
GRAND VOYAGER	91 / 94	**PD/553**				
VOYAGER 4WD	92 / 93	**PD/553**				
GRAND VOYAGER 4WD	92 / 93	**PD/553**				
VOYAGER	84 / 90	**PD/568**				
GRAND VOYAGER	87 / 90	**PD/568**				
PONTIAC						
6000	83 / 91	**PD/499**	Bendix			
AZTEK	01 / 05	**PD/732**		**PD/677**		
BONEVILLE	87 / 91	**PD/499**	Bendix			
BONNEVILLE 3.8L	94 / 99	**PD/697**				
FIREBIRD	94 / 97	**PD/697**				
FIREBIRD	94 / 97	**PD/697**				
FIREBIRD	98 / 01	**PD/713**				
FIREBIRDTRANS AM	94 / 98	**PD/609**				
G2 (MATIZ)	05 / 09	**PD/598**				
G3	08 / 09	**PD/818**				
G4 GT 2.2L / 2.4L	05 / 07	**PD/593**		**PD/766**		
G4 LS 2.2L	05 / 07	**PD/756**				
G5 GT	08 / 09	**PD/815**		**PD/766**		
G5 GT 2.4L	07 / 07	**PD/593**		**PD/766**		
G5 LS 2.2L	07 / 09	**PD/756**				
G6 GT	05 / 07	**PD/801**		**PD/766**		
G6 GT / GTP / GXP 3.6L	07 / 09	**PD/815**		**PD/766**		
G6 SE 3.5L	05 / 07	**PD/593**		**PD/766**		
GRAND AM	02 / 05	**PD/772**				
GRAND AM	96 / 98	**PD/508**				
GRAND AM	99 / 01	**PD/714**				
GRAND AM	99 / 04	**PD/567**		**PD/677**		
GRAND AM 3.4L	99 /	**PD/567**				
GRAND PRIX	88 / 96	**PD/519**				
GRANDPRIX	97 / 01	**PD/564**		**PD/677**		
GRANDPRIX	04	**PD/799**		**PD/798**		
GTO	04 /	**PD/436**		**PD/437**		
MONTANA 3.5L / 3.9L	05 / 09	**PD/769**		**PD/810**		
PHOENIX	81 / 84	**PD/540**				
SOLSTICE 2.2L / 2.4L	06 / 08	**PD/593**		**PD/1061**		
SUNBRID	85 / 91	**PD/546**				
SUNFIRE 2.2L / 2.4L	97 / 04	**PD/506**				
SURFIRE	96 / 05	**PD/508**				
TORRENT	06 /	**PD/577**				
TORRENT	07 / 09	**PD/711**		**PD/715**		
TRAS SPORT	90 / 91	**PD/499**	Bendix			
PORSCHE						
CAYENNE	03 / 05	**PD/1064**				
CAYENNE	08 / 09	**PD/1064**				

MODEL / *MODELO*	YEAR - *AÑO*	FRONT *DELANTERA*	SYSTEM *SISTEMA*	REAR *TRASERA*	SYSTEM *SISTEMA*	OBS.
PORSCHE						
CAYENNE 3.2	03 /	**PD/1450**				
CAYENNE 4.5 V8 TURBO	03 /	**PD/1450**				
CAYENNE	11 /	**PD/1463**	Brembo	**PD/1464**		
MACAN 3.0 S	14 /			**PD/1369**		
PROTON						
313 1.3	95 /	**PD/452**	Sumitomo			
315 1.5	95 /	**PD/452**	Sumitomo			
413 1.6	96 /	**PD/452**	Sumitomo			
415 1.5	93 /	**PD/452**	Sumitomo			
416 1.6	93 / 96	**PD/452**	Sumitomo			
PERSONA 1.5 i / 1.6i	93 /	**PD/452**	Sumitomo			
PERSONA COMPACT 1.3 / 1.5 / 1.6	95 /	**PD/452**	Sumitomo			
SAGA 1.3 i / 1.5 i	92 /	**PD/452**	Sumitomo			
PUMA						
914	89 /	**PD/102**	Varga	**FD/72**	Bendix	
CAMINHÃO 4 T	79 / 87	**2026-AT**		**FD/72**	Bendix	
GTB	73 / 76	**PD/7**	Varga	**855**	Varga	
GTB	77 / 79	**PD/8**	Varga	**855**	Varga	
GTB S2	79 / 84	**PD/8**	Varga	**855**	Varga	
GTB S3	79 / 84	**PD/8**	Varga	**855**	Varga	
GTC	81 / 84	**PD/5**	Teves	**VW/272**	VW	
GTE	69 / 80	**PD/5**	Teves	**VW/272**	VW	
GTI	81 / 84	**PD/5**	Teves	**VW/272**	VW	
GTS	70 / 80	**PD/5**	Teves	**VW/272**	VW	
P-018	81 / 84	**PD/5**	Teves	**VW/272**	VW	
RABA						
400 x 160,0 mm	06-97 /			**19720/721 00**		
400 x 220,0 mm	06-97 /			**19728/741 00**		
RANDON						
3° EIXO	58 / 70			**4195-A**		
3° EIXO	71 / 87			**4195-B**		
3° EIXO	87 /			**4514-G**	Master	
3° EIXO	99 /			**4707 FD/88**	Master	
CARRETA	63 / 87			**SV/223 SV/226**		
CARRETA	87 / 97			**CA/32**	Master	
CARRETA	98			**4718**	Master	
CARRETA	99 /			**CA/33**	Master	
REFORMAS - CAMIONES Y/O OMNIBUS						
ALT-FREN		**9051**				
FRENAR MATRIPAR		**MB/141**		**MB/142**		
FRENAR MATRIPAR		**MB/141**		**AC/30**		
FRENOS OESTE				**9507**		
INTERFRENO		**9504**		**9530**		
RECRUSUL						
CARRETA	/ 78			**4515-C 4515-G**		
CARRETA	78 /			**CA/32**	Master	

MODEL / *MODELO*	YEAR - *AÑO*	FRONT *DELANTERA*	SYSTEM *SISTEMA*	REAR *TRASERA*	SYSTEM *SISTEMA*	OBS.
RENAULT						
AE - Series / MAGNUM	00 /	**PD/129**	Meritor			
AE - SERIES / MAGNUM	95 / 00	**PD/112**	Meritor			
AE - SERIES / MAGNUM	93 / 95	**PD/125**	Meritor			
AE - SERIES / MAGNUM	00 /	**PD/125**	Meritor			
AE - SERIES / MAGNUM	93 / 95	**PD/125 (30mm)**	Meritor			
AE - SERIES / MAGNUM	00 /	**PD/125 (30mm)**	Meritor			
AE - SERIES / MAGNUM	00 /	**PD/129**	Meritor			
AGORA	96 /	**PD/125**	Meritor			
AGORA	96 /	**PD/125 (30mm)**	Meritor			
BAQUEANO	56 / 70	**1219-RA**		**1219-RA**		
CLIO	94 / 96	**PD/322-A PD/305-A**	Bendix Girling	**RN/212**		
CLIO 1.6L	02 / 09	**PD/338 PD/338-A**				
CLIO EURO	07 / 07			**PD/362**		
CLIO RL 1.0	99 /	**PD/338 PD/338-A**	Girling	**RN/131-CPA**	Girling	
CLIO RL 1.6	96 / 00	**PD/338 PD/338-A**	Girling	**RN/212-CPA**	TRW	
CLIO RN 1.0	99 /	**PD/338 PD/338-A**	Girling	**RN/131-CPA**	Girling	
CLIO RN 1.6	96 / 00	**PD/338 PD/338-A**	Girling	**RN/212-CPA**	TRW	
CLIO RN 1.6	96 / 98	**PD/322-A**	Bendix	**RN/212-CPA**	TRW	Importado
CLIO RN 1.6 16V	01	**PD/338 PD/338-A**	Girling	**RN/131-CPA**	Girling	
CLIO RT 1.6	96 / 00	**PD/338 PD/338-A**	Girling	**RN/212-CPA**	TRW	
CLIO RT 1.6 16V	01	**PD/338 PD/338-A**	Girling	**RN/131-CPA**	Girling	
CLIO RT 16 V	93 / 96	**PD/305-A**	Girling	**PD/465**	Bendix	
CLIO SEDAN RN 1.6 16V	00 /	**PD/338 PD/338-A**	Girling	**RN/131-CPA**	Girling	
CLIO SEDAN RT 1.6 16V	00 /	**PD/338 PD/338-A**	Girling	**RN/131-CPA**	Girling	
CLIO SI 1.6 16V	00 /	**PD/338 PD/338-A**	Girling	**PD/465**	Bendix	
CLIO SPORT 2.0L	02 / 04	**PD/391-A**		**PD/465**		
DAUPINHE	67 / 72	**8034-RA**		**8034-RA**		
DUSTER 1.6 16V	11 /	**PD/1386**	TRW			
DUSTER DYNAMIQUE 1.6 16V	11 /	**PD/1386**	TRW			
DUSTER EXPRESSION 1.6 16V	11 /	**PD/1386**	TRW			
DUSTER DYNAMIQUE 2.0 16V	12 /	**PD/1422**	Ate			
ESPACE MK III 3.0 V6 24V	10-98 / 10-02	**PD/1387**				
ESTANCIERA	56 / 70	**1219-RA**		**1219-RA**		
EXPRESS	95 /	**PD/327**	Bendix	**RN/209**		
EXPRESS GTi	95 /	**PD/305-A**	Girling	**RN/209**		
EXPRESS GTi	95 /	**PD/338 PD/338-A**	Girling	**RN/209**		
EXPRESS GTL	95 /	**PD/322-A**	Bendix	**RN/209**		
FLUENCE (LATIN AMERICA)	11 /	**PD/1377**				
FLUENCE 2.0 16V	10 /	**PD/1422**	Ate	**PD/362**	Girling	
FLUENCE 2.0 16V	11 /	**PD/1422**	Ate	**PD/1446**	Bosch	
FLUENCE 2.0	12 /	**PD/1376**				
FLUENCE GT	13 /	**PD/1422**	Ate			
FUEGO	84 / 91	**PD/305-A**	Girling	**8124-L**		
FUEGO	84 / 91	**PD/322-A**	Bendix	**8124-L**		

MODEL / *MODELO*	YEAR - *AÑO*	FRONT *DELANTERA*	SYSTEM *SISTEMA*	REAR *TRASERA*	SYSTEM *SISTEMA*	OBS.
RENAULT						
FUEGO	89 /	**PD/305-A**	Girling	**PD/320**		
FUEGO	89 /	**PD/322-A**	Girling	**PD/320**		
GORDINI	67 / 72	**8049**		**8034-RA**		
GRAND SCÉNIC 1.5 DCI	04-04 /	**PD/1398**				
GRAND SCÉNIC 1.6	04-04 /	**PD/1398**				
GRAND SCÉNIC 1.9 DCI	04-04 /	**PD/1398**				
GRAND SCÉNIC 2.0	04-04 /	**PD/1398**				
ILIADE	06-00 /	**PD/129**	Meritor	**PD/129**	Meritor	
ILIADE	97 / 05-00	**PD/125**	Meritor	**PD/125**	Meritor	
ILIADE	97 / 05-00	**PD/125 (30mm)**	Meritor	**PD/125 (30mm)**	Meritor	
JEEP IKA	56 / 70	**1219-RA**		**1219-RA**		
KANGOO (LATIN AMERICA)	04 /	**PD/1096**				
KANGOO 1.0 RL	00 /	**PD/412-B**	Bendix	**RN/214-CP**	Bosch	
KANGOO 1.0 RN	00 /	**PD/412-B**	Bendix	**RN/214-CP**	Bosch	
KANGOO 1.6 RL	00 /	**PD/412-B**	Bendix	**RN/214-CP**	Bosch	
KANGOO 1.6 RN	00 /	**PD/412-B**	Bendix	**RN/214-CP**	Bosch	
KANGOO 1.6L	04 / 09	**PD/412**				
KANGOO EXPRESS 1.6 RL / 1.9 RLD	99 /	**PD/412-B**	Bendix	**RN/214-CP**	Bosch	
KOLEOS				**PD/585**		
LAGUNA 1.6	93 / 01	**PD/391-A**	Girling	**PD/482**	Brembo	
LAGUNA 1.8	93 / 01	**PD/391-A**	Girling	**RN/171-CPA**	Girling	
LAGUNA 1.8	97 / 01	**PD/391-A**	Girling	**PD/482**	Brembo	
LAGUNA 1.8 RXE 16V	99 /	**PD/391-A**	Girling	**PD/399**	Brembo	
LAGUNA 1.8 RXE 16V	99 /	**PD/391-A**	Girling	**PD/482**	Brembo	
LAGUNA 2.0	93 / 01	**PD/391-A**	Girling	**RN/171-CPA**	Girling	
LAGUNA 2.0	97 / 01	**PD/391-A**	Girling	**PD/482**	Brembo	
LAGUNA 2.0 RT 8V	96 /	**PD/391-A**	Girling	**PD/399**	Brembo	
LAGUNA 2.0 RT 8V	96 /	**PD/391-A**	Girling	**PD/482**	Brembo	
LAGUNA 2.0 RXE 16V	95 /	**PD/391-A**	Girling	**PD/399**	Brembo	
LAGUNA 2.0 RXE 16V	95 /	**PD/391-A**	Girling	**PD/482**	Brembo	
LAGUNA 2.0 RXT	98 /	**PD/391-A**	Girling	**PD/399**	Brembo	
LAGUNA 2.0 RXT	98 /	**PD/391-A**	Girling	**PD/482**	Brembo	
LAGUNA 2.2 D	93 / 01	**PD/391-A**	Girling			
LAGUNA 2.2 D	97 / 01	**PD/391-A**	Girling	**PD/482**	Brembo	
LAGUNA 3.0 RXT V6 24V	98 /	**PD/391-A**	Girling	**PD/399**	Brembo	
LAGUNA 3.0 RXT V6 24V	98 /	**PD/391-A**	Girling	**PD/482**	Brembo	
LAGUNA 3.0 V6	93 / 01	**PD/391-A**	Girling			
LAGUNA 3.0 V6	97 / 01	**PD/391-A**	Girling	**PD/482**	Brembo	
LAGUNA 3.0L	03 / 06	**PD/786**				
LAGUNA GRANDTOUR 1.6	95 / 01	**PD/391-A**	Girling	**PD/482**	Brembo	
LAGUNA GRANDTOUR 1.8	95 / 01	**PD/391-A**	Girling	**PD/482**	Brembo	
LAGUNA GRANDTOUR 1.9 dTi	95 / 01	**PD/391-A**	Girling	**PD/482**	Brembo	
LAGUNA GRANDTOUR 2.0	95 /	**PD/391-A**	Girling	**RN/171-CPA**	Girling	
LAGUNA GRANDTOUR 2.0	97 / 01	**PD/391-A**	Girling	**PD/482**	Brembo	
LAGUNA GRANDTOUR 2.2 D	95 /	**PD/391-A**	Girling	**RN/171-CPA**	Girling	
LAGUNA GRANDTOUR 2.2 D	97 / 01	**PD/391-A**	Girling	**PD/482**	Brembo	
LAGUNA GRANDTOUR 3.0 V6	95 /	**PD/391-A**	Girling	**RN/171-CPA**	Girling	
LAGUNA GRANDTOUR 3.0 V6	97 / 01	**PD/391-A**	Girling	**PD/482**	Brembo	
LAGUNA RT Diesel	96 /	**PD/391-A**	Girling	**PD/399**	Brembo	
LAGUNA RT Diesel	96 /	**PD/391-A**	Girling	**PD/482**	Brembo	
LAGUNA RXE Turbo Diesel	98 /	**PD/391-A**	Girling	**PD/399**	Brembo	
LAGUNA RXE Turbo Diesel	98 /	**PD/391-A**	Girling	**PD/482**	Brembo	
LOGAN 1.0	08 /	**PD/338**	Girling	**RN/324-CPA**		

MODEL / *MODELO*	YEAR - *AÑO*	FRONT *DELANTERA*	SYSTEM *SISTEMA*	REAR *TRASERA*	SYSTEM *SISTEMA*	OBS.
RENAULT						
LOGAN 1.6	08 /	**PD/338**	Girling	**RN/324-CPA**		
LOGAN 1.6 16V	08 /	**PD/338**	Girling	**RN/325-CPA**		Freio traseiro Ø203,0x39,0mm
LOGAN 1.6 8V	08 /	**PD/338**	Girling	**RN/325-CPA**		Freio traseiro Ø203,0x39,0mm
LOGAN 1.8	08 /	**PD/338**	Girling			
LOGAN AUTHENTIQUE 1.0 16V	14 /	**PD/1483**				
LOGAN DYNAMIQUE 1.6 8V	14 /	**PD/1483**				
LOGAN EXPRESSION 1.0 16V	14 /	**PD/1483**				
MAGNUM AE 380 / 385 / 390 - 4X2 / 6X2 / 6X4	90 / 12-92	**PD/166**	Meritor			
MAGNUM AE 500 / 520 / 560 - 4X2 / 6X2 / 6X4	90 / 12-92	**PD/166**	Meritor			
MAGNUM DXi SERIES - 440.18/24/26 Meritor ELSA225-3 (PNG) Caliper - 22.5" Wheel	10-04 / 04-06	**PD/196**	Meritor			
MAGNUM DXi SERIES - 440.18/24/26 Meritor VGT195 Caliper - 19.5" Wheel	10-04 / 05-06	**PD/130**	Meritor			
MAGNUM DXi SERIES - 460.18/24/26 Meritor ELSA225-3 (PNG) Caliper - 22.5" Wheel	05-06 /	**PD/196**	Meritor			
MAGNUM DXi SERIES - 460.18/24/26 Meritor VGT195 Caliper - 19.5" Wheel	05-06 /	**PD/130**	Meritor			
MAGNUM DXi SERIES - 480.18/24/26 Meritor ELSA225-3 (PNG) Caliper - 22.5" Wheel	10-04 / 04-06	**PD/196**	Meritor			
MAGNUM DXi SERIES - 480.18/24/26 Meritor VGT195 Caliper - 19.5" Wheel	10-04 / 05-06	**PD/130**	Meritor			
MAGNUM DXi SERIES - 500.18/24/25/26 Meritor ELSA225-3 (PNG) Caliper - 22.5" Wheel	05-06 /	**PD/196**	Meritor			
MAGNUM DXi SERIES - 500.18/24/25/26 Meritor VGT195 Caliper - 19.5" Wheel	05-06 /	**PD/130**	Meritor			
MAGNUM E-TECH	00 /	**PD/129**	Meritor	**PD/129**	Meritor	
MAJOR R 340 / 350 / 380 / 385	90 / 10-93	**PD/166**	Meritor			
MAJOR R 420	90 / 10-93	**PD/166**	Meritor			
MANAGER G 200 / 220 / 230 / 270 / 280	04-90 / 12-92	**PD/166**	Meritor			
MANAGER G 260 / 290 - 6X2	07-87 /	**PD/166**	Meritor			
MANAGER G 300 / 330 / 340	04-90 / 12-92	**PD/166**	Meritor			
MASCOTT	07 / 09	**PD/188-A**				
MASCOTT		**PD/208**				
MASTER	99 /	**PD/472**	Bendix			
MASTER 2.3 DCI	13 /	**PD/1439-B**		**PD/1440-B**		
MASTER 2.5 DCI	02 /	**PD/347**	Bosch	**PD/516**	Bosch	
MASTER 2.8 D	02 /	**PD/347**	Bosch	**PD/516**	Bosch	
MASTER 2.8 DTI	02 /	**PD/347**	Bosch	**PD/516**	Bosch	
MAXITY 140 4x2		**PD/208**				
MAXITY 110.28	07 /	**PD/1405-A**				
MAXITY 110.32	07 /	**PD/1405-A**				
MAXITY 110.35	07 /	**PD/1405-A**				
MAXITY 130.35	07 /	**PD/1405-A**				
MAXITY 150.35	07 /	**PD/1405-A**				
MEGANE 1.4 / 1.6 / 1.9D / 2.0	97 /	**PD/338** **PD/338-A**	Girling			
MEGANE 1.6 / 2.0	97 /	**PD/391-A**	Girling			
MEGANE 1.9D / 2.0 16V	97 /	**PD/338** **PD/338-A**	Girling	**PD/465**	Bendix	
MEGANE 1.9D / 2.0 16V	97 /	**PD/391-A**	Girling	**PD/399**	Brembo	
MEGANE 2.0 16V	97 /	**PD/305-A**	Girling	**PD/399**	Brembo	
MEGANE CC 2.0L	04 / 07	**PD/601**				
MEGANE COUPE 2.0 16V	96 /	**PD/391-A**	Girling	**PD/465**	Bendix	
MEGANE GRAND TOUR 1.6 16V	07 /	**PD/391-A**	Girling	**PD/362**	Girling	
MEGANE GRAND TOUR 2.0 16V	07 /	**PD/391-A**	Girling	**PD/362**	Girling	
MEGANE GRAND TOUR 2.0 16V	09 /	**PD/1444**				
MEGANE HATCH 1.6	97 /	**PD/391-A**	Girling	**RN/213-CP**	Bosch	Freio traseiro Ø203x38mm
MEGANE HATCH 2.0	97 /	**PD/391-A**	Girling	**RN/213-CP**	Bosch	Freio traseiro Ø203x38mm

MODEL / *MODELO*	YEAR - *AÑO*	FRONT *DELANTERA*	SYSTEM *SISTEMA*	REAR *TRASERA*	SYSTEM *SISTEMA*	OBS.
RENAULT						
MEGANE HATCH RN 1.6	98 / 00	**PD/338 PD/338-A**	Girling	**RN/213-CP**	Bosch	Freio traseiro Ø203x38mm
MEGANE HATCH RT 1.6	98 / 00	**PD/338 PD/338-A**	Girling	**RN/213-CP**	Bosch	Freio traseiro Ø203x38mm
MEGANE HATCH RT 1.6 16V	98 /	**PD/338 PD/338-A**	Girling	**RN/213-CP**	Bosch	Freio traseiro Ø203x38mm
MEGANE HATCH RXE 1.6 16V	00 /	**PD/338 PD/338-A**	Girling	**RN/213-CP**	Bosch	Freio traseiro Ø203x38mm
MEGANE HATCH RXE 2.0	98 / 00	**PD/338 PD/338-A**	Girling	**RN/213-CP**	Bosch	Freio traseiro Ø203x38mm
MEGANE I 2.0L	01 / 03	**PD/391-A**		**PD/362**		
MEGANE II	04 / 09	**PD/601**		**PD/362**		
MEGANE II	11-02 /	**PD/1398**				
MEGANE II 1.4 16V	10-03 /	**PD/601**	Bosch	**PD/362**	Girling	
MEGANE II 1.5 DCI	11-02 /	**PD/601**	Bosch	**PD/362**	Girling	
MEGANE II 1.6	09-03 /	**PD/601**	Bosch	**PD/362**	Girling	
MEGANE II 1.6 16V	11-02 /	**PD/601**	Bosch	**PD/362**	Girling	
MEGANE II 1.6 CONVERSÍVEL	09-03 /	**PD/601**	Bosch	**PD/362**	Girling	
MEGANE II 1.6 COUPE	09-03 /	**PD/601**	Bosch	**PD/362**	Girling	
MEGANE II 1.9 DCI	11-02 /	**PD/601**	Bosch	**PD/362**	Girling	
MEGANE II 1.9 DCI CONVERSÍVEL	09-03 /	**PD/601**	Bosch	**PD/362**	Girling	
MEGANE II 1.9 DCI COUPE	09-03 /	**PD/601**	Bosch	**PD/362**	Girling	
MEGANE II 2.0	09-03 /	**PD/601**	Bosch	**PD/362**	Girling	
MEGANE II 2.0 16V	11-02 /	**PD/601**	Bosch	**PD/362**	Girling	
MEGANE II 2.0 CONVERSÍVEL	09-03 /	**PD/601**	Bosch	**PD/362**	Girling	
MEGANE II 2.0 COUPE	09-03 /	**PD/601**	Bosch	**PD/362**	Girling	
MEGANE I CABRIOLET 2.0 16V	01-02 /	**PD/1398**				
MEGANE II COUPÉ-CABRIOLET	09-03 /	**PD/1398**				
MEGANE II LATIN AMERICA	05 / 08	**PD/1431**				
MEGANE II SALOON	09-03 /	**PD/1398**				
MEGANE II SPORT TOURER	08-03 /	**PD/1398**				
MEGANE SEDAN 2.0	97 /	**PD/391-A**	Girling	**RN/213-CP**	Bosch	Freio traseiro Ø203x38mm
MEGANE SEDAN RT 16V	00 /	**PD/338 PD/338-A**	Girling	**RN/213-CP**	Bosch	Freio traseiro Ø203x38mm
MEGANE SEDAN RT 2.0	98 / 00	**PD/338 PD/338-A**	Girling	**RN/213-CP**	Bosch	Freio traseiro Ø203x38mm
MEGANE SEDAN RXE 2.0	98 /	**PD/338 PD/338-A**	Girling	**RN/213-CP**	Bosch	Freio traseiro Ø203x38mm
MIDLINER C SERIES 10 TO 13 ton	06-00 /	**PD/169-E**	See	**PD/169-E**	See	
MIDLINER M 120 / 140 / 150 / 160 / 180.12 / 13	89 / 12-94	**PD/155-E**	See			
MIDLINER M 120 / 140 / 150 / 160 / 180.12 / 13	01-95 / 12-97	**PD/169-E**	See			
MIDLINER M 200 / 210 / 230.12 / 13	89 / 12-94	**PD/155-E**	See			
MIDLINER M 200 / 210 / 230.12 / 13	01-95 / 12-97	**PD/169-E**	See			
MIDLINER M PA160 / 180	89 / 12-94	**PD/155-E**	See			
MIDLINER M PA160/180	01-95 / 12-97	**PD/169-E**	See			
MIDLINER S 12 /13	87 / 90	**PD/155-E**	See			
MIDLINER S 120 / 135 / 140 / 150 / 180.07 / 08A / 160.06 / 08 / 210.07 / 08A	90 /	**PD/355**	Meritor			
MIDLINER S 130.11 / 13 / 14 / 150.11 / 13 / 14 / 170.11 / 13	05-86 /	**PD/169-E**	See			
MIDLINER S 130.11 / 130.13 / 14 / 150.11 / 13 / 14	/ 04-86	**PD/155-E**	See			
MIDLINER S 130/150.13/14 / S150/170.11/13	05-86 /	**PD/155-E**	See			
MIDLINER S 160.06 / 08	90 /	**PD/355**	Meritor			
MIDLINER S 210.07 / 08A	90 /	**PD/355**	Meritor			
MIDLUM 130 / 150 / 180 / 210	00 /	**PD/124**	Wabco	**PD/124**	Wabco	
MIDLUM SERIES - 160.12 / 190.12 / 13 / 14 / 16	05-06 /	**PD/195**	Meritor	**PD/195**	Meritor	
MIDLUN - 160.10 / 190.10 / 220.0	05-06 /	**PD/209 PD/209-A**	Haldex DB19	**PD/209 PD/209-A**	Haldex DB19	

MODEL / *MODELO*	YEAR - *AÑO*	FRONT *DELANTERA*	SYSTEM *SISTEMA*	REAR *TRASERA*	SYSTEM *SISTEMA*	OBS.
RENAULT						
MIDLUM SERIES - 210 / 220 / 250 / 270.12 / 14 / 16 / 18	03-01 /	**PD/161**	Wabco	**PD/161**	Wabco	
MIDLUM SERIES - 220.12 / 13 / 14 / 16	05-06 /	**PD/195**	Meritor	**PD/195**	Meritor	
MIDLUM SERIES - 240 / 280.12 / 13 / 14 / 16 / 18	05-06 /	**PD/195**	Meritor	**PD/195**	Meritor	
MS 300 P		**4524-B**		**4515-G**		
NEVADA TXI	90 /	**PD/321-A**	Bendix			
PREMIUM	00 /	**PD/125**	Meritor			
PREMIUM	96 / 05-00			**PD/129**	Meritor	
PREMIUM	06-00 /	**PD/129**	Meritor	**PD/129**	Meritor	
PREMIUM	96 / 00	**PD/112**	Meritor			
PREMIUM	00 /	**PD/125 (30mm)**	Meritor			
PREMIUM	96 / 05-00			**PD/129**	Meritor	
PREMIUM	06-00 /	**PD/129**	Meritor	**PD/129**	Meritor	
PREMIUM 2 DISTRIBUTION 280	10-05 /			**PD/130**	Meritor	
PREMIUM 2 DISTRIBUTION 320 / 370	10-05 /			**PD/130**	Meritor	
PREMIUM 2 DISTRIBUTION 410 / 450	10-05 /			**PD/130**	Meritor	
PREMIUM 2 ROUTE 410 / 450	10-05 /			**PD/130**	Meritor	
R 380.17 / 380.19 / 385 TL	93 / 96	**PD/125**	Meritor			
R 380.17 / 380.19 / 385 TL	93 / 96	**PD/125 (30mm)**	Meritor			
R 385 TL	93 / 96	**PD/125**	Meritor			
R-11	85 /	**PD/322-A**	Bendix	**RN/209**		
R-11	85 /	**PD/305-A**	Girling	**FD/65**		
R-11 Turbo	85 /	**PD/322-A**	Bendix	**RN/209**		
R-12	84 / 93	**PD/304**	Tensa	**8124-S**		
R-12	84 / 93	**PD/304**	Tensa	**8124-L**		
R-12	72 / 83	**PD/301**				
R-12	78 / 83	**PD/317**	Tensa	**8034-RA**		
R-12	73 / 91	**PD/301**	Bendix	**8034-RA**		
R-12 BREAK	73 / 80	**PD/302**	Tensa	**8034-RA**		
R-18	84 / 93	**PD/304**	Tensa	**8124-S**		
R-18	84 / 93	**PD/304**	Tensa	**8124-L**		
R-18	84 / 89	**PD/303-A**	Bendix	**8124-L**		
R-18	84 / 91	**PD/305-A**	Girling	**8124-L**		
R-19 1.8	/ 96			**RN/216-CP**		Freio traseiro Ø203,0x39,0mm
R-19 1.9 D RN	93 /	**PD/305-A**	Girling	**PD/465**		
R-19 2.0	/ 96			**RN/216-CP**		Freio traseiro Ø203,0x39,0mm
R-19 CHAMADE	93 /	**PD/305-A**	Girling	**FD/63-S/F**		Francés
R-19 CHAMADE	93 /	**PD/338 PD/338-A**	Girling	**FD/63-S/F**		Francés
R-19 CHAMADE	93 /	**PD/322-A**	Bendix	**FD/63-S/F**		Francés
R-19 CHAMADE / Diesel	93 /	**PD/305-A**	Girling	**PD/465**		
R-19 CHAMADE 1.7 GTX	93 /	**PD/338-A**	Girling	**PD/465**	Bendix	
R-19 CHAMADE 1.7 TXE	93 /	**PD/338-A**	Girling	**PD/465**	Bendix	
R-19 COUPE 2.0 16V	96 /			**PD/465**	Bendix	
R-19 RN	93 / 96	**PD/305-A**	Girling	**RN-215-CP**		Freio traseiro Ø180,0x42,0mm
R-19 RN	93 / 98	**PD/322-A**	Bendix			Importado
R-19 RN	96 /	**PD/338 PD/338-A**	Girling	**RN/212-CPA**	TRW	
R-19 RT	93 / 96	**PD/305-A**	Girling	**RN/216-CP**		Freio traseiro Ø203,0x39,0mm
R-19 RT	93 / 98	**PD/322-A**	Bendix			Importado
R-19 RT	96 /	**PD/338 PD/338-A**	Girling	**RN/212-CPA**	TRW	
R-19 RT / RN	93 /	**PD/305-A**	Girling	**RN/212 RN/212-CPA**	TRW	

MODEL / *MODELO*	YEAR - *AÑO*	FRONT *DELANTERA*	SYSTEM *SISTEMA*	REAR *TRASERA*	SYSTEM *SISTEMA*	OBS.
RENAULT						
R-19 RT/ RN	93 /	**PD/338 PD/338-A**	Girling	**RN/212 RN/212-CPA**	TRW	
R-19 RT/ RN	93 /	**PD/322-A**	Bendix	**RN/212 RN/212-CPA**	TRW	
R-21	92 / 97			**RN-215-CP**		Freio traseiro Ø180,0x42,0mm
R-21 GTX / TXE	90 /	**PD/321-A**	Tensa	**8124-L**		
R-21 NEVADA	92 / 97			**RN-215-CP**		Freio traseiro Ø180,0x42,0mm
R-21 NEVADA 1.9	90 /	**PD/305-A**	Girling	**8124-L**		
R-21 NEVADA 1.9	90 /	**PD/338 PD/338-A**	Girling	**8124-L**		
R-21 NEVADA TXi / ALIZE	90 /	**PD/321-A**	Tensa	**8124-L**		
R-25	85 / 94	**PD/391-A**	Girling			
R-4 F / L / S	67 / 72	**8034-RA**		**8034-RA**		
R-4 S	84 / 93	**PD/304**	Tensa	**8124-L**		
R-5	81 / 88	**PD/322-A**	Bendix			
R-5 1.1L	76 / 84	**PD/301**				
R-5 1.4	81 / 85	**PD/304**	Tensa			
R-6	70 / 84	**8124-L**		**8034-RA**		
R-9	85 /	**PD/322-A**	Bendix	**RN/209**		
R-9	85 /	**PD/305-A**	Girling	**RN/212**		
RAMBLER	56 / 70	**1219-RA**		**1219-RA**		
RAMBLER AMBASADOR	71 / 80	**PD/9**		**1219-RA**		
RAMBLER Cross Country	67 / 70			**1219-RA**		
S-SERIES MIDLINER 120 / 135 / 140	90 / 00	**PD/123**	Meritor			
S-SERIES MIDLINER 150 / 160 / 180 / 210	90 / 00	**PD/123**	Meritor			
SAFRANE	94 /	**PD/391-A**	Girling	**PD/399**	Brembo	
SANDERO	07 /	**PD/338**	Girling	**RN/325-CPA**		Freio traseiro Ø203,0x39,0mm
SANDERO	10 /	**PD/338**				
SANDERO 1.0	08 /	**PD/338**	Girling	**RN/324-CPA**		
SANDERO 1.6	08 /	**PD/338**	Girling	**RN/324-CPA**		
SANDERO AUTHENTIQUE 1.0 16V	14 /	**PD/1483**				
SANDERO DYNAMIQUE 1.6 8V	14 /	**PD/1483**				
SANDERO EXPRESSION 1.0 16V	14 /	**PD/1483**				
SANDERO EXPRESSION 1.6	14 /	**PD/1483**				
SANDERO STEPWAY 1.6 8V / 1.6 16V	14 /	**PD/1483**				
SCENIC 1.4 / 1.6	98 /	**PD/338 PD/338-A**	Girling	**RN/171-CPA**	Girling	
SCENIC 1.6	98 /	**PD/391-A**	Girling	**RN/171-CPA**	Girling	
SCENIC 1.6	98 /	**PD/391-A**	Girling	**PD/362**	Girling	com ABS
SCENIC 1.9	96 /	**PD/391-A**	Girling	**RN/171-CPA**	Girling	
SCENIC 1.9 D	98 /	**PD/391-A**	Girling	**RN/171-CPA**	Girling	
SCENIC 2.0	98 /	**PD/391-A**	Girling	**PD/465**	Bendix	
SCENIC 2.0	96 /	**PD/391-A**	Girling	**RN/171-CPA**	Girling	
SCENIC 2.0	96 /	**PD/391-A**	Girling	**PD/362**	Girling	com ABS
SCENIC I 2.0L	01 / 04	**PD/391-A**		**PD/362**		
SCENIC II	05 / 08	**PD/601**		**PD/362**		
SYMBOL EXPRESSION 1.6 16V	09 /	**PD/338**	Girling			
SYMBOL EXPRESSION HI - FLEX 1.6 8V	09 /	**PD/338**	Girling			
SYMBOL PRIVILEGE 1.6 16V	09 /	**PD/338**	Girling			
TORINO 300	67 / 70			**1219-RA**		
TORINO 300 S/ 380/ 380 S/ 380 W	71 / 80	**PD/9**		**1219-RA**		
TRAFIC	91 /	**PD/318-A**	Bendix	**RN/210 RN/326-CPA**		
TRAFIC II BUS / VAN 1.9 DCI	03-01 /	**PD/1387**				
TRAFIC II BUS / VAN 2.0	03-01 /	**PD/1387**				
TRAFIC II BUS / VAN 2.5 DCI	08-06 /	**PD/1387**				

MODEL / *MODELO*	YEAR - *AÑO*	FRONT *DELANTERA*	SYSTEM *SISTEMA*	REAR *TRASERA*	SYSTEM *SISTEMA*	OBS.
RENAULT						
TRAFIC II BUS / VAN 2.5 Dti	03-03 / 03-07	**PD/1387**				
TRAFIC 1.4 / 2.0 / 2.2 / Diesel	84 /	**PD/318-A**	Bendix	**RN/210 RN/326-CPA**		
TRAFIC RODEO/ MICROBUS	84 /	**PD/318-A**	Bendix	**RN/210 RN/326-CPA**		
TRANSIT	04-06 /	**PD/1091-A**				
TWINGO	93 / 98	**PD/327**	Bendix	**RN/131-CPA**	Girling	
TWINGO	93 /	**PD/327**	Bendix	**RN/209-S/F RN/131-CPA**	Girling	
TWINGO	93 / 98	**PD/338**	Girling	**RN/215-CP**		Freio traseiro Ø180,0x42,0mm
TWINGO	93 / 98	**PD/338**	Girling	**RN/131-CPA**	Girling	
RENAULT TRUCKS						
440		**19090 00**		**19071 00**		
260.18 / B	06-97 /	**19935 00**		**19935 00**		
300.18 / B	06-97 /	**19935 00**		**19935 00**		
300.26 / A / B	06-97 /	**19935 00**		**19935 00**		
340.18 / B	06-97 /	**19935 00**		**19935 00**		
340.26 / A / B	06-97 /	**19935 00**		**19935 00**		
340.32 / A	06-97 /	**19935 00**		**19935 00**		
385.18 / B	06-97 /	**19935 00**		**19935 00**		
385.18T	06-97 /	**19935 00**		**19935 00**		
385.26 / A / B	06-97 /	**19935 00**		**19935 00**		
385.26 / A / B / C	06-97 /	**19935 00**		**19935 00**		
385.26 / B	06-97 /	**19935 00**		**19935 00**		
385.26T	06-97 /	**19935 00**		**19935 00**		
385.32 / A / B / C	06-97 /	**19935 00**		**19935 00**		
AE 380	90 / 92			**19935 00**		
AE 380.19 TD	90 / 92			**19935 00**		
AE 380.22 TD	90 / 92			**19935 00**		
AE 385 Ti	90 / 92			**19935 00**		
AE 385 Ti.18/18T	02-92 / 10-96			**19187 00**		
AE 385 Ti.19/19T	02-92 / 10-96			**19187 00**		
AE 385 Ti.24	02-92 / 10-96			**19187 00**		
AE 385 Ti.26	02-92 / 10-96			**19187 00**		
AE 390.18 / 18T / 390.19 / 19T / 390.26	09-96 /			**19187 00**		
AE 420 Ti.18 / 18T / 420.19 / 19T	10-92 / 96			**19187 00**		
AE 420 Ti.22T / 420.24 / 24T / 420.26	10-92 / 96			**19187 00**		
AE 420.26T	10-92 / 96			**19934 00**		
AE 420.26T	10-92 / 96			**19935 00**		
AE 430.18 / 18T / 430.19 / 19T	09-96 /			**19187 00**		
AE 430.26	09-96 /			**19187 00**		
AE 430.26T	01-97 /			**19935 00**		
AE 430.26T	01-97 /			**19934 00**		
AE 430.18 / 18T / 430.19 / 19T	11-96 /			**19187 00**		
AE 470.26	97 /			**19187 00**		
AE 470.26T	98 /			**19934 00**		
AE 470.26T	98 /			**19935 00**		
AE 500	90 / 92			**19935 00**		
AE 500.19 TD	90 / 92			**19935 00**		
AE 500.22 TD	90 / 92			**19935 00**		
AE 520.18 / 18T / 520.19 / 19T	10-92 / 05-96			**19187 00**		
AE 520.22T / 520.24 / 24T / 520.26	10-92 / 05-96			**19187 00**		
AE 520.26T	10-92 / 05-96			**19934 00**		
AE 520.26T	10-92 / 05-96			**19935 00**		
AE 560.18 / 18T / 560.19 / 19T	04-96 /			**19187 00**		

MODEL / *MODELO*	YEAR - *AÑO*	FRONT *DELANTERA*	SYSTEM *SISTEMA*	REAR *TRASERA*	SYSTEM *SISTEMA*	OBS.
RENAULT TRUCKS						
AE 560.19 / 19T	04-96 /			**19187 00**		
AE 560.26	04-96 /			**19187 00**		
AE 560.26T	97 /			**19934 00**		
AE 560.26T	97 /			**19935 00**		
C 210 / C 210.19 Turbo	82 / 87	**19049/199 95**				
C 210.19	09-87 / 02-89	**19934 00**				
C 210.19	03-89 /	**19934 00**		**19935 00**		
C 230 Ti 19	06-88 /	**19934 00**		**19935 00**		
C 260.19	09-87 / 02-89	**19934 00**				
C 260.19	03-89 /	**19934 00**		**19935 00**		
C 260.19 / 260.19 4x4 / C 260.19 T / C 260.19 Turbo	82 / 87	**19049/199 95**				
C 260.26 (6x2 / 6x4) / Turbo	10-82 / 10-87	**19049/199 95**		**19049/199 95**		19049/199 95 2nd rear axle
C 280.19		**19934 00**		**19935 00**		
C 290 6x4	01-89 /	**19934 00**		**19934 00**		
C 290.19	09-87 / 02-89	**19934 00**				
C 290.19	03-89 /	**19934 00**		**19935 00**		
C 290.19 4x4 / C 290.19 T 4x4 Turbo Intercooler	87 /	**19049/199 95**				
C 290.26 6x4 Turbo Intercooler	09-86 / 10-87	**19049/199 95**		**19049/199 95**		19049/199 95 2nd rear axle
C 300 PM		**19934 00**		**19935 00**		
C 300.19	03-89 /	**19934 00**		**19935 00**		
C 319	06-88 /	**19934 00**		**19935 00**		
C 340 Ti	03-89 /	**19934 00**		**19935 00**		
CBH 280	03-89 /	**19934 00**		**19935 00**		
CBH 280 6x4 / (6x6) Turbo	06-86 / 06-88	**19049/199 95**				
CBH 320 6x4	/ 05-97	**19935 00**		**19935 00**		19935 00 2nd rear axle
CBH 320 (6x6)	06-88 /	**19934 00**		**19935 00**		19935 00 2nd rear axle
CBH 340 Turbo Intercooler	03-87 / 06-88	**19049/199 95**				
CBH 340 / 350 / 380	03-89 /	**19934 00**		**19935 00**		
CBH 385 6x4	/ 05-97	**19935 00**		**19935 00**		19935 00 2nd rear axle
CBH 385 (6x6)		**19934 00**		**19935 00**		19935 00 2nd rear axle
CCH 300 / 300.26	03-89 /	**19934 00**		**19935 00**		
CLM 280	06-88 /	**19934 00**		**19935 00**		
CLM 280 T Turbo	03-86 / 06-88	**19049/199 95**				
CLM 320 / 340 / 350 / 380 / 385	06-88 /	**19934 00**		**19935 00**		
CLM 340 T Turbo Intercooler	04-87 / 06-88	**19049/199 95**				
CLM 380 T	03-89 /	**19934 00**		**19935 00**		
CLR 220	09-87 / 02-89	**19934 00**				
CLR 220	03-89 /	**19934 00**		**19935 00**		
G 11 / G 18	86 / 90			**17316 00**		
G 12	86 / 90			**17316 00**		
G 13	86 / 90			**19351 00**		(6 Cyl. Inline Eng.)
G 13 / G 15	86 / 90	**19072 00**		**19351 00**		(8 Cyl. V8 Eng.)
G 15	86 / 90	**19351 00**		**19351 00**		(6 Cyl. Inline Eng.)
G 16 / G 26	86 / 90	**19111 00**		**19111 00**		
G 160	90 /	**19935 00**		**19935 00**		
G 170	04-86 / 10-88	**19934 00**		**19934 00**		
G 170	10-88 /	**19934 00**		**19935 00**		
G 170 4x2	83 /	**19049/199 95**				
G 170.16	83 / 03-86	**19049/199 95**				
G 20	86 / 90	**17546 00**		**19351 00**		
G 200	/ 04-90	**19934 00**		**19935 00**		
G 200.17/18	04-90 /	**19935 00**		**19935 00**		
G 210 17 TON	10-88 /	**19934 00**		**19935 00**		
G 210.15/17T	04-86 / 10-88	**19934 00**		**19934 00**		

MODEL / *MODELO*	YEAR - *AÑO*	FRONT *DELANTERA*	SYSTEM *SISTEMA*	REAR *TRASERA*	SYSTEM *SISTEMA*	OBS.
RENAULT TRUCKS						
G 210.17	83 / 03-86	**19049/199 95**				
G 210.19 T	83 / 02-86	**19049/199 95**				
G 210.19 Turbo	04-86 /	**19934 00**		**19935 00**		
G 220.19	92 /	**19935 00**		**19935 00**		
G 230 17 TON	10-88 /	**19934 00**		**19935 00**		
G 230 SP Turbo	04-86 / 10-88	**19934 00**		**19934 00**		
G 230 Ti	/ 04-90	**19934 00**		**19935 00**		
G 230 Ti / G 235	90 /	**19935 00**		**19935 00**		
G 230.15/17T	04-86 / 10-88	**19934 00**		**19934 00**		
G 230.17	83 / 03-86	**19049/199 95**				
G 230.17	04-90 /	**19935 00**		**19935 00**		
G 230.18	04-90 /	**19935 00**		**19935 00**		
G 230.19	04-90 /	**19935 00**		**19935 00**		
G 230.19 T	83 / 02-86	**19049/199 95**				
G 230.19 Turbo	04-86 /	**19934 00**		**19935 00**		
G 24	86 / 90	**19111 00**		**19351 00**		19351 00 2nd rear axle
G 260	82 /	**19049/199 95**				
G 260 17 TON	10-88 /	**19934 00**		**19935 00**		
G 260.15	/ 10-88	**19934 00**		**19934 00**		
G 260.16	83 / 03-86	**19049/199 95**				
G 260.17	83 / 03-86	**19049/199 95**				
G 260.17 TD 4x2	83 /	**19049/199 95**				
G 260.17 Turbo	/ 10-88	**19934 00**		**19934 00**		
G 260.19 4x4 Turbo	07-86 /	**19934 00**		**19935 00**		
G 260.19 GT Turbo Intercooler	09-84 / 86	**19049/199 95**				
G 260.19 T	/ 03-86	**19049/199 95**				
G 260.19 T/TD	/ 03-86	**19049/199 95**				
G 260.19 TB/TE	/ 03-86	**19049/199 95**				
G 260.19 TC/TF		**19049/199 95**				
G 260.24 (6x2) Turbo	07-86 /	**19934 00**		**19935 00**		19935 00 2nd rear axle
G 260.26 (6x2) Turbo	07-86 /	**19934 00**		**19935 00**		19935 00 2nd rear axle
G 270	94 /	**19935 00**		**19935 00**		
G 270	90 /	**19935 00**		**19935 00**		
G 280	/ 04-90	**19934 00**		**19935 00**		
G 280	90 /	**19935 00**		**19935 00**		
G 280.17	04-90 /	**19935 00**		**19935 00**		
G 280.18	04-90 /	**19935 00**		**19935 00**		
G 280.19	04-90 /	**19935 00**		**19935 00**		
G 290 17 TON	10-88 /	**19934 00**		**19935 00**		
G 290.17	/ 10-88	**19934 00**		**19934 00**		
G 290.19 A Turbo Intercooler		**19934 00**		**19935 00**		
G 290.19 GT Tractor	/ 03-86	**19049/199 95**				
G 290.19 GT Turbo Intercooler	04-86 /	**19934 00**		**19935 00**		
G 290.19 T Turbo Intercooler	04-86 /	**19934 00**		**19935 00**		
G 290.19 Tractor	84 / 86	**19049/199 95**				
G 290.19 Turbo Intercooler	04-86 /	**19934 00**		**19935 00**		
G 290.19 / 19 A	/ 03-86	**19049/199 95**				
G 290.24 6x2	07-87 /	**19934 00**		**19935 00**		19935 00 2nd rear axle
G 290.26 6x2 / 6x4 Turbo Intercooler	07-87 /	**19934 00**		**19935 00**		19935 00 2nd rear axle
G 290.30	07-87 /	**19934 00**		**19935 00**		
G 300	/ 04-90	**19934 00**		**19935 00**		
G 300	90 /	**19935 00**		**19935 00**		
G 300.17	04-90 /	**19935 00**		**19935 00**		
G 300.18	04-90 /	**19935 00**		**19935 00**		

MODEL / *MODELO*	YEAR - *AÑO*	FRONT *DELANTERA*	SYSTEM *SISTEMA*	REAR *TRASERA*	SYSTEM *SISTEMA*	OBS.
RENAULT TRUCKS						
G 300.19	04-90 /	**19935 00**		**19935 00**		
G 300.24	04-90 /	**19935 00**		**19935 00**		
G 300.26	04-90 /	**19935 00**		**19935 00**		
G 320.19 6x2	88 /	**19934 00**		**19935 00**		19935 00 2nd rear axle
G 320.24 6x2	88 /	**19934 00**		**19935 00**		19935 00 2nd rear axle
G 320.26 6x2	88 /	**19934 00**		**19935 00**		19935 00 2nd rear axle
G 330	/ 04-90	**19934 00**		**19935 00**		
G 330.17	04-90 /	**19935 00**		**19935 00**		
G 330.18	04-90 /	**19935 00**		**19935 00**		
G 330.19	04-90 /	**19935 00**		**19935 00**		
G 330.19 6x2	88 /	**19934 00**		**19935 00**		19935 00 2nd rear axle
G 330.24 6x2	88 /	**19934 00**		**19935 00**		19935 00 2nd rear axle
G 330.26 6x2	88 /	**19934 00**		**19935 00**		19935 00 2nd rear axle
G 340 Ti	/ 04-90	**19934 00**		**19935 00**		
G 340 Ti	90 /	**19935 00**		**19935 00**		
G 340.18	04-90 /	**19935 00**		**19935 00**		
G 340.19 6x2	88 /	**19934 00**		**19935 00**		19935 00 2nd rear axle
G 340.24 6x2	88 /	**19934 00**		**19935 00**		19935 00 2nd rear axle
G 340.26 6x2	88 /	**19934 00**		**19935 00**		19935 00 2nd rear axle
GB 131	10-78 /			**19049/199 95**		
GB 191	10-78 /			**19049/199 95**		
GB 191 A	10-78 /			**19049/199 95**		
GB 231	10-78 /			**19049/199 95**		
GB 231 A/B	10-78 /			**19049/199 95**		
GBD 4x4	74 / 78	**19049/199 95**		**19049/199 95**		
GBH 12 6x4	74 /	**19049/199 95**				
GBH 260 6x4	75 / 79	**19049/199 95**				
GBH 280 6x4	76 /	**19049/199 95**				
GBH 280 6x6	10-78 /	**19049/199 95**				
GBH 280 6x6 Turbo	07-86 / 06-88	**19049/199 95**				
GC 190 / GF 190	74 / 78	**19049/199 95**		**19049/199 95**		
GC 191 / A / B BOM	78 /	**19049/199 95**		**19049/199 95**		
GC 230	79 /	**19049/199 95**		**19049/199 95**		
GC 231 / A / Turbo	78 /	**19049/199 95**		**19049/199 95**		
GF 151 4x2	80 /	**19049/199 95**				
GF 191 / A	78 /	**19049/199 95**		**19049/199 95**		
GF 231 / A	78 /	**19049/199 95**		**19049/199 95**		
GLC 190	74 /	**19049/199 95**		**19049/199 95**		
GLR 190 / A	78 /	**19049/199 95**				
GLR 190 / GLS 190	74 /	**19049/199 95**				
GLR 230 4x4	04-80 /	**19049/199 95**				
GLR 230 / A	78 /	**19049/199 95**				
GR 190 / GR 205	74 /	**19049/199 95**				
GR 191 / A	78 /	**19049/199 95**				
GR 191 / B BOM	78 /	**19049/199 95**				
GR 231 / A	78 /	**19049/199 95**				
GR 250 / TR 250	05-72 /	**19049/199 95**				
GR 260 / TR 260	05-72 /	**19049/199 95**				
GR 280	73 /	**19049/199 95**		**19049/199 95**		
GR 280 A / B		**19049/199 95**		**19049/199 95**		
GR 280 / TR 280	05-72 /	**19049/199 95**				
GR 300 / TR 300	05-72 /	**19049/199 95**				
GR 305 / Turbo	77 /	**19049/199 95**				
GR 320 / TR 320	74 /	**19049/199 95**				

MODEL / *MODELO*	YEAR - *AÑO*	FRONT *DELANTERA*	SYSTEM *SISTEMA*	REAR *TRASERA*	SYSTEM *SISTEMA*	OBS.
RENAULT TRUCKS						
GR 350 4x2	77 /	**19049/199 95**				
GR 350 / Turbo	77 /	**19049/199 95**				
GRH 235 / R 6x4	78 /	**19049/199 95**		**19049/199 95**		19049/199 95 2nd rear axle
GRH 305 6x4	77 /	**19049/199 95**				
GRH 350 6x4	77 /	**19049/199 95**				
HB 17 BOM		**19049/199 95**				
HF 26 V		**19049/199 95**				
M 150.14	89 /	**19934 00**		**19934 00**		19935 00 rear optional
M 160.15	89 /	**19934 00**		**19934 00**		19935 00 rear optional
M 180.15 / 180.16	89 /	**19934 00**		**19934 00**		19935 00 rear optional
M 200.15 / 200.16	89 /	**19934 00**		**19934 00**		19935 00 rear optional
M 210.14 / 210.15 / 210.16	90 /	**19934 00**		**19934 00**		19935 00 rear optional
M 230.15 / 230.16	89 /	**19934 00**		**19934 00**		19935 00 rear optional
M 250.15 / 250.16	96 /	**19934 00**		**19934 00**		19935 00 rear optional
PA 160/180	89 /	**19934 00**		**19934 00**		19935 00 rear optional
PR 100 MI		**19049/199 95**				
R 310	/ 08-84	**19049/199 95**				
R 310	09-84 /	**19934 00**		**19935 00**		
R 310.26 T 6x4	/ 08-84	**19049/199 95**		**19049/199 95**		19049/199 95 2nd rear axle
R 310.26 T 6x4	09-84 /	**19934 00**		**19934 00**		19934 00 2nd rear axle
R 310.33 T 6x4	/ 08-84	**19049/199 95**				
R 310.33 T 6x4	09-84 /	**19934 00**		**19935 00**		19935 00 2nd rear axle
R 330	89 /	**19934 00**		**19935 00**		
R 340	86 /	**19934 00**		**19935 00**		
R 340 Ti	05-93 /	**19935 00**		**19935 00**		
R 340 Ti 6x2	90 / 10-93	**19935 00**		**19935 00**		19935 00 2nd rear axle
R 340 Ti 6x2	11-93 /	**19935 00**		**19935 00**		19935 00 2nd rear axle
R 340 Ti Tractor	90 / 04-93	**19934 00**		**19935 00**		
R 340.26 T 6x4	85 / 88	**19934 00**		**19934 00**		19934 00 2nd rear axle
R 340.26 T 6x4	89 /	**19934 00**		**19935 00**		19935 00 2nd rear axle
R 340.33 T 6x4	85 /	**19934 00**		**19935 00**		19935 00 2nd rear axle
R 350		**19934 00**		**19935 00**		
R 350	90 /	**19935 00**		**19935 00**		
R 360	/ 83	**19049/199 95**				
R 360.26 T 6x4	/ 83	**19049/199 95**		**19049/199 95**		19049/199 95 2nd rear axle
R 360.33 T 6x4	/ 83	**19049/199 95**				
R 365	10-87 /	**19934 00**		**19935 00**		
R 365.26 T 6x4	87 / 88	**19934 00**		**19934 00**		19934 00 2nd rear axle
R 365.26 T 6x4	89 /	**19934 00**		**19935 00**		19935 00 2nd rear axle
R 365.33 T 6x4	84 /	**19934 00**		**19935 00**		19935 00 2nd rear axle
R 370	/ 84	**19049/199 95**				
R 370	09-84 /	**19934 00**		**19935 00**		
R 370.26 T 6x4	/ 08-84	**19049/199 95**		**19049/199 95**		19049/199 95 2nd rear axle
R 370.26 T 6x4	09-84 /	**19934 00**		**19934 00**		19934 00 2nd rear axle
R 370.33 T 6x4	/ 08-84	**19049/199 95**				
R 370.33 T 6x4	09-84 /	**19934 00**		**19935 00**		19935 00 2nd rear axle
R 380	90 /	**19935 00**		**19935 00**		
R 380 6x4	90 /	**19934 00**		**19935 00**		19935 00 2nd rear axle
R 385 Ti	05-93 /	**19935 00**		**19935 00**		
R 385 Ti 6x2	90 / 10-93	**19935 00**		**19935 00**		19935 00 2nd rear axle
R 385 Ti 6x2	11-93 /	**19935 00**		**19935 00**		19935 00 2nd rear axle
R 385 Ti 6x4	90 / 10-93	**19934 00**		**19935 00**		19935 00 2nd rear axle
R 385 Ti 6x4	11-93 /	**19935 00**		**19935 00**		19935 00 2nd rear axle
R 385 Ti (Tractor)	90 / 04-93	**19934 00**		**19935 00**		

MODEL / *MODELO*	YEAR - *AÑO*	FRONT *DELANTERA*	SYSTEM *SISTEMA*	REAR *TRASERA*	SYSTEM *SISTEMA*	OBS.
RENAULT TRUCKS						
R 390	10-85 /	**19934 00**		**19935 00**		
R 390.26 T 6x4	05-85 /	**19934 00**		**19934 00**		19934 00 2nd rear axle
R 390.33 T 6x4	05-85 /	**19934 00**		**19935 00**		19935 00 2nd rear axle
R 420	89 /	**19934 00**		**19935 00**		
R 420 (Tractor)	89 / 92			**19935 00**		
R 420 Ti	90 / 04-93	**19934 00**		**19935 00**		
R 420 Ti	05-93 /	**19935 00**		**19935 00**		
R 420.26 T 6x4	88	**19934 00**		**19934 00**		19934 00 2nd rear axle
R 420.26 T 6x4	89 /	**19934 00**		**19935 00**		19935 00 2nd rear axle
R 420.33 T 6x4	88 /	**19934 00**		**19935 00**		19935 00 2nd rear axle
S-170 S-P				**19049/199 95**		
S-170 Ti				**19049/199 95**		
S-170.11				**19049/199 95**		
S-170.13	07-83 /			**19049/199 95**		
S-170.14				**19049/199 95**		
S-170.14 BOM				**19049/199 95**		
S-220 Ti				**19049/199 95**		
S-240 Ti				**19049/199 95**		
TB 191 4x2	10-78 /			**19049/199 95**		
TB 191 C	10-78 /			**19049/199 95**		
TB 191 E	10-78 /			**19049/199 95**		
TB 191 F	10-78 /			**19049/199 95**		
TB 191 G	10-78 /			**19049/199 95**		
TB 231 C	79 /			**19049/199 95**		
TB 231 E	79 /			**19049/199 95**		
TB 231 F	79 /			**19049/199 95**		
TB 231 G	80 /			**19049/199 95**		
TBH 12		**19049/199 95**				
TBH 280 Turbo		**19049/199 95**				
TLM 280	80 /	**19049/199 95**				
TLR 280-1	10-77 /	**19049/199 95**				
TLR 280-C	74 /	**19049/199 95**				
TLR 280-E		**19049/199 95**				
TLT 280-A1		**19049/199 95**				
TR 280 A	74 /	**19049/199 95**				
TRH 320 TS 6x4		**19049/199 95**				
TRH 350 TS 6x4 Turbo		**19049/199 95**				
RENAULT SPECIAL VEHICLES						
110-150 Ti 4x4	91 /	**17017 00**				
110-170 Ti 4x4	91 /	**17017 00**				
85-150 Ti 4x4	91 /	**17017 00**				
M 180 FTP				**19049/199 95**		
ME / SE / CE 160 (15 tons)				**19049/199 95**		
ME / SE / CE 160 4x4		**17017 00**				
ME / SE / CE 180 (15 tons)				**19049/199 95**		
ME / SE / CE 180 4x4		**17017 00**				
RENAULT BUSES						
AGORA	96 /			**19187 00**		
E 7 L	69 /			**19049/199 95**		
E 7 M	69 /			**19049/199 95**		
E 7 N	69 /			**19049/199 95**		
FR 1	93 /			**19935 00**		wheel base 5,40m
FR 1	93 /			**19187 00**		wheel base 6,20 m
FR 1 - T 1	05-84 / 92			**19935 00**		

MODEL / *MODELO*	YEAR - *AÑO*	FRONT *DELANTERA*	SYSTEM *SISTEMA*	REAR *TRASERA*	SYSTEM *SISTEMA*	OBS.
RENAULT BUSES						
FR 1 - T 2	05-84 / 92			**19935 00**		
FR 1 - TX - GTX	05-84 / 92			**19935 00**		
FR 1 GT 1 - GT 2	05-84 / 92			**19935 00**		
ILIADE GTC	97 /			**19187 00**		
ILIADE GTX	97 /			**19187 00**		
ILIADE RT	97 /			**19187 00**		
ILIADE RTC	97 /			**19187 00**		
ILIADE RTX	97 /			**19187 00**		
ILIADE TE	97 /			**19187 00**		
PR 10 S	76 /			**19049/199 95**		
PR 100.3	94 /	**19935 00**				
PR 12 S	76 /			**19049/199 95**		
PR 14 S	76 /			**19049/199 95**		
PR 14 SL	78 /			**19049/199 95**		
PR 14 SR / SR GT		**19049/199 95**		**19049/199 95**		
PR 180		**19049/199 95**		**19049/199 95**		
PR 180.3	94 /	**19935 00**				
S-105 C & L	65 /	**19049/199 95**		**19049/199 95**		
S-105 R		**19049/199 95**		**19049/199 95**		
S-45 GT	65 /	**19049/199 95**		**19049/199 95**		
S-53	65 /	**19049/199 95**		**19049/199 95**		
S-57 L	80 /			**19049/199 95**		
SC 10	65 /	**19049/199 95**		**19049/199 95**		
TRACER	92 /	**19935 00**		**19935 00**		
ROVER						
620	93 /	**PD/397**	Akebono			
214 1.4i 16V Cabrio	92 /	**PD/409**	Girling	**PD/457**	Akebono	Con ABS
214 1.4i 16V Cabrio	92 /	**PD/394**	Girling			
214 1.4i 16V SI / GSI / LSI / Sprint	90 / 95	**PD/409**	Girling			
214 1.4i 16V SI / GSI / LSI / Sprint	95 /	**PD/394**	Girling			
216 1.6i 16V Cabrio / Coupe	92 /	**PD/394**	Girling			Con ABS
216 1.6i 16V GTI	92 /	**PD/394**	Girling			Con ABS
216 1.6i 16V SI / GSI	90 /	**PD/409**	Girling			
218 1.8 GSD / Turbo GSD / SLD / SD	90 / 92	**PD/409**	Girling			
218 1.8 GSD / Turbo GSD / SLD / SD	92 /	**PD/394**	Girling			
218 1.9 D	91 / 92	**PD/409**	Girling			Tras.Cintas
218 1.9 D	91 / 95	**PD/394**	Girling			
220 2.0i 16V / Turbo Coupé	93 /	**PD/394**	Girling			
220 2.0i 16V GTI	92 /	**PD/394**	Girling			Con ABS
25 1.4 Confort / 1.6 Classic / 1.8 Vi	99 /	**PD/394**	Girling			
400 1.6	95 /	**PD/394**	Girling			
400 1.8	93 / 98	**PD/394**	Girling			
414 1.4i 16V SI / GSI / LSI	90 / 95	**PD/409**	Girling	**PD/457**	Akebono	Con ABS
414 1.4i 16V SI / GSI / LSI	95 /	**PD/394**	Girling			Con ABS
416 1.6i 16V GSI / GTI / SLI / SI	96 /	**PD/394**	Girling			
416 1.6i 16V GTI	90 /	**PD/394**	Girling			Con ABS
416 1.6i 16V GTI	90 / 96	**PD/409**	Girling			
416 1.6i 16V SI / GSI / Vitesse	90 /	**PD/409**	Girling			Con ABS
418 1.8 TD SLD / GSD	92 / 98	**PD/409**	Girling	**PD/457**	Akebono	
418 1.8 Turbo Diesel SLD - GSD	91 / 98	**PD/394**	Girling			
420 2.0i 16V GLI / GTI / GSI / Turbo / Coupe	91 /	**PD/394**	Girling			
420 2.0i 16V SLI / GSI / Vitesse	91 /	**PD/394**	Girling			Con ABS
45 1.4 Confort / 1.6 Classic / 2.0 V6 Club	99 /	**PD/394**	Girling			

MODEL / *MODELO*	YEAR - *AÑO*	FRONT *DELANTERA*	SYSTEM *SISTEMA*	REAR *TRASERA*	SYSTEM *SISTEMA*	OBS.
ROVER						
618 1.8i 16V / 2.0i 16V T / S / Luxe	93 /	**PD/388**	Akebono	**PD/554**	Akebono	
618 1.9	96 /	**PD/388**	Akebono	**PD/554**	Akebono	
618 2.0i 16V T / S / Luxe Automatic	93 /	**PD/449**	Akebono	**PD/554**	Akebono	
620 2.0 D	93 / 98	**PD/449**	Akebono	**PD/554**	Akebono	
620 2.0id Turbo Diesel SDI - Automatic	93 /	**PD/388**	Akebono	**PD/554**	Akebono	
623 2.3i 16V GS / S / Luxe		**PD/388**	Akebono	**PD/554**	Akebono	
623 2.3i 16V GS / S / Luxe Automatic	93 / 98	**PD/449**	Akebono	**PD/554**	Akebono	
820 2.0	/ 94	**PD/463-B**	Girling			
820 2.0 i 16V Vitesse	93 /	**PD/394**	Girling			
820 2.0i / 2.0i 16 V / Turbo	/ 92	**PD/463-B**	Girling			
820 2.0i 16V SI / SLI / TI Luxe	91 /	**PD/394**	Girling			
820 2.0i 16V Turbo TI Coupe / Sport	91 /	**PD/394**	Girling			
825 2.5 SD / SLD / TD / SD / Vitesse	91 /	**PD/394**	Girling			
825 2.5i / 2.5 D / TD	/ 91	**PD/463-B**	Girling			
827 2.7i 24V SI / SCI / SLI / Sterling / Vitesse	91 /	**PD/394**	Girling			
RODOVIÁRIA						
3° EIXO	65 /			**4195-B** **SV/223** **SV/226**		
CARRETA	65 / 73			**SV/223**		
CARRETA	74 /			**SV/223** **SV/226**		
ROSSETTI						
3° EIXO	65 /			**4195-B**		
CARRETA	66 /			**SV/223**		
CARRETA	00 /			**CA/32**		
RUBERY OWEN ROCKWELL (ROR)						
311 x 190,5 mm (12.1/4 x 7.1/2")				**19604/605 00**		Type AC
350 x 200,0 mm				**19908/909 00**		Type B
381 x 177,8 mm (15 x 7")				**19384/385 00**		
410 x 180,0 mm	/ 04-96			**19555/556 00**		
410 x 200,0 mm	/ 04-96			**19553/554 00**		
410 x 200,0 mm	05-96 /			**19716 00**		
419 x 177,8 mm (16.1/2 x 7")				**19030/033 00**		Type Q-Plus, LM Axles
419 x 177,8 mm (16.1/2 x 7")				**19036/037 00**		Type Q
419 x 177,8 mm (16.1/2 x 7")				**FMSI 4515-E**		
419 x 177,8 mm (16.1/2 x 7")				**FMSI 4515-G**		
419 x 177,8 mm (16.1/2 x 7")				**FMSI 4707**		
419 x 203,0 mm (16.1/2 x 8")				**19365/366 00**		Type C12S2030
419 x 219,1 mm (16.1/2 x 8.5")				**19369/370 00**		Type Z
S.A.E. (DUPILLIER)						
355 x 200,0 mm (S 3520)				**19892/893 00**		
419 x 177,8 mm (16.1/2 x 7")				**19036/037 00**		ROR Axle
419 x 203,0 mm (16.1/2 x 8")				**19365/366 00**		ROR Axle
420 x 160,0 mm				**19200 00**		BPW Axle
420 x 200,0 mm				**19094 00**		BPW Axle
HALDEX INTRADISC DB22 - 22.5"				**PD/170**	Haldex	
PAN 19-1				**PD/131**	Wabco	
PAN 22				**PD/197**	Wabco	
SB 6000				**PD/120**	Knorr	
SB 7000				**PD/116**	Knorr	

MODEL / *MODELO*	YEAR - *AÑO*	FRONT *DELANTERA*	SYSTEM *SISTEMA*	REAR *TRASERA*	SYSTEM *SISTEMA*	OBS.
SAAB						
124 L	99 / 04	**PD/116**		**PD/116**		
9-3. CONV	02 / 03	**PD/729**		**PD/38**		
9-3. SE / CONV 2.0L	01 / 02	**PD/729**		**PD/38**		
9-5. AERO 2.3L	01 / 05	**PD/729**		**PD/716**		
9-5. ARC 2.3L / 3.0L	05 / 07	**PD/729**		**PD/716**		
9-5. LINEAR 2.3L	03 / 04	**PD/729**		**PD/716**		
9-5. SEDAN / WAGON 2.3L / 3.0L	01 / 03	**PD/729**		**PD/716**		
IRIZAR	01 / 02	**PD/116**		**PD/116**		
IRIZAR VISTABUS	03 / 06	**PD/116**		**PD/116**		
SAF						
300 x 150,0 mm				**19517/518 00**		SN - Brake
300 x 200,0 mm				**19515/516 00**		SN - Brake
355 x 200,0 mm				**19892/893 00**		SN - Brake
367 x 180,0 mm				**19479/480 00**		SNK - Brake
367 x 200,0 mm				**19490/491 00**		SNK - Brake
400 x 120,0 mm				**17115 00**		
419 x 177,8 mm				**19036/037 00**		
419 x 203,2 mm				**19365/366 00**		8 x 18 rivets
420 x 160,0 mm				**19200 00**		
420 x 180,0 mm				**19032 00**		SKRF 9042
420 x 180,0 mm				**19283/284 00**		SNK - Brake (SKRF 9042)
420 x 200,0 mm				**19094 00**		
420 x 200,0 mm				**19477/478 00**		SNK - Brake (SKRF 9042)
HALDEX MK IV, MODULX - DB22 - 22.5" - with bump				**PD/170**	Haldex	
SK 11019K				**PD/120**	Knorr	
SK 7 / 9-11 ton				**PD/172**	Knorr	
SK 9019K				**PD/120**	Knorr	
SK RB 9019 W Intradisc Plus				**PD/131**	Wabco	
SK RB 9022 H / K				**PD/116**	Knorr	
SK RS / RZ 11222K				**PD/116**	Knorr	
SK RS / RZ 9022K				**PD/116**	Knorr	
WABCO PAN 22				**PD/197**	Wabco	
WABCO PAN 22-1				**PD/164**	Wabco	
SALTO						
SALTO				**4311-B-RA**		
SALTO				**AC/30**		
SALTO				**CA/32**		
SAMRO						
AXLES W/DISC BRAKES FONTENAX				**PD/161**	Wabco	
D-ELSA 2				**PD/129**	Meritor	
SB 7000				**PD/116**	Knorr	
SANOS						
415 / DL 426		**19579/580 00**		**19632/633 00**		
SATURN						
ION	04 /	**PD/593**				
SC1 / SC2	93 / 96	**PD/687**				
SKY	07 /	**PD/593**				
SL / SL1 / SL2	91 / 96	**PD/687**				
SW1 / SW2	93 / 96	**PD/687**				

MODEL / *MODELO*	YEAR - *AÑO*	FRONT *DELANTERA*	SYSTEM *SISTEMA*	REAR *TRASERA*	SYSTEM *SISTEMA*	OBS.
SATURN						
VUE	02 / 07	**PD/577**	Bosch			
SCANIA						
B-100	71 / 76	**SV/224**	Scania	**SV/226**	Scania	
B-110	72 / 82	**SV/224**	Scania	**SV/226**	Scania	
B-111	76 / 81	**SV/224**	Scania	**SV/226**	Scania	
B-76	64 / 71	**SV/222**	Scania	**SV/223**	Scania	3° eixo **SV/224**
BR-115	75 / 82	**SV/224**	Scania	**SV/226**	Scania	
BR-116	76 / 82	**SV/224**	Scania	**SV/226**	Scania	
BR-116	90 / 93	**SV/224** **SV/224-A**		**SV/226** **SV/226-RA**		
F-94 4x2	98 /	**SV/230**	Scania	**SV/231**	Scania	
F-112	83 / 91	**SV/224**	Scania	**SV/226**	Scania	
F-112	86 / 91	**SV/223**	Scania	**SV/227**	Scania	
F-113	91 / 93	**SV/223** **SV/224**	Scania	**SV/226** **SV/227**	Scania	
F-113	93 /	**SV/228** **SV/229**	Scania	**SV/230** **SV/231**	Scania	
F-113 H	94 /	**SV/228**		**SV/230**		
G-360 4X2	12 /	**SV/230**	Scania	**SV/231**	Scania	
G-360 6X2	12 /	**SV/230**	Scania	**SV/231**	Scania	
G-400 4X2	12 /	**SV/230**	Scania	**SV/231**	Scania	
G-400 6X2	12 /	**SV/230**	Scania	**SV/231**	Scania	
G-440 6X4	12 /	**SV/230**	Scania	**SV/231**	Scania	
G-480 8X4	12 /	**SV/230**	Scania	**SV/231**	Scania	
G-480 10X4	12 /	**SV/230**	Scania	**SV/231**	Scania	
G-440	13 /	**SV/230**	Scania	**SV/231**	Scania	
K-94	98 /	**SV/230**	Scania	**SV/231**	Scania	Ônibus Rodoviário
K-112	83 / 91	**SV/224**	Scania	**SV/226**	Scania	
K-112	86 / 91	**SV/223**	Scania	**SV/227**	Scania	
K-112 D / DS	90 / 93	**SV/224** **SV/224-A**		**SV/226** **SV/226-RA**		
K-113	10 /	**SV/230**	Scania	**SV/230**	Scania	Ônibus
K-113	91 / 93	**SV/223** **SV/224**	Scania	**SV/226** **SV/227**	Scania	
K-113	93 /	**SV/228** **SV/229**	Scania	**SV/230** **SV/231**	Scania	
K-113	94 /	**SV/228**		**SV/230**		
K-113 T	93 /	**SV/228**		**SV/228**		3° eixo SV/228 Llanta artillera
K-113 T	93 /	**SV/228** **SV/229**	Scania	**SV/230** **SV/231**	Scania	3° eixo **SV/228** **SV/229**
K-113 T	93 /	**SV/229**		**SV/231**		3° eixo **SV/229** Llanta disco
K-124 4x2	98 /	**SV/230**	Scania	**SV/231**	Scania	
K-124 6x2	98 /	**SV/230**	Scania	**SV/231**	Scania	3° eixo **SV/230**
K-124 EB 4x2	00 /	**PD/116**	Knorr	**PD/116**	Knorr	Ómnibus
K-124 EB 6x2	00 /	**PD/116-K**	Knorr	**PD/116-K**	Knorr	3° eixo **SV/230; SV/231**
K-124 EB 8x2	00 /	**PD/116-K**	Knorr	**PD/116-K**	Knorr	3° eixo **SV/230; SV/231**
K-230 4x2	08 /	**SV/229** **PD/116**	Scania	**SV/230** **PD/116**	Scania	Freio a Tambor Freio a Disco (opcional)
K-270 4x2	08 /	**SV/229** **PD/116**	Scania	**SV/230** **PD/116**	Scania	Freio a Tambor Freio a Disco (opcional)
K-310 4x2	08 /	**SV/230** **PD/116**	Scania	**SV/231** **PD/116**	Scania	Freio a Tambor Freio a Disco (opcional)
K-340 4x2	08 /	**SV/229** **PD/116**	Scania	**SV/230** **PD/116**	Scania	Freio a Tambor Freio a Disco (opcional)
K-380 4x2 / 6x2	08 /	**SV/229** **PD/116**	Scania	**SV/230** **PD/116**	Scania	Freio a Tambor Freio a Disco (opcional)

MODEL / *MODELO*	YEAR - *AÑO*	FRONT *DELANTERA*	SYSTEM *SISTEMA*	REAR *TRASERA*	SYSTEM *SISTEMA*	OBS.
SCANIA						
K-420 4x2 / 6x2	08 /	**SV/229 PD/116**	Scania	**SV/230 PD/116**	Scania	Freio a Tambor Freio a Disco (opcional)
KS-140	75 / 78	**SV/224**	Scania	**SV/226**	Scania	
KT-112	83 / 91	**SV/224**	Scania	**SV/226**	Scania	3° eixo **SV/224**
KT-112	86 / 91	**SV/223**	Scania	**SV/227**	Scania	3° eixo **SV/223**
KT-113	91 / 93	**SV/223 SV/224**	Scania	**SV/226 SV/227**	Scania	3° eixo **SV/223 SV/224**
L-75	58 / 63	**SV/222**	Scania	**SV/223**	Scania	3° eixo **SV/224**
L-76	64 / 71	**SV/222**	Scania	**SV/223**	Scania	3° eixo **SV/224**
L-94 4x2	98 /	**SV/230**	Scania	**SV/231**	Scania	Urbano
L-94 IB	00 /	**SV/230**	Scania	**SV/231**	Scania	Urbano
L-94 IB/ UB	00 /	**PD/116**	Knorr	**PD/116**	Knorr	
L-94 UB	00 /	**SV/230**	Scania	**SV/231**	Scania	Urbano
L-100	71 / 76	**SV/224**	Scania	**SV/226**	Scania	
L-101	78	**SV/224**	Scania	**SV/226**	Scania	
L-110	72 / 82	**SV/224**	Scania	**SV/226**	Scania	
L-111	76 / 81	**SV/224**	Scania	**SV/226**	Scania	
L-111	90 / 93	**SV/224 SV/224-A**		**SV/226 SV/226-RA**		
L-112	90 / 91	**SV/223 SV/224**	Scania	**SV/226 SV/227**	Scania	Urbano
L-113	91 / 93	**SV/223 SV/224**	Scania	**SV/226 SV/227**	Scania	Urbano
L-113	93 /	**SV/228 SV/229**	Scania	**SV/230 SV/231**	Scania	Urbano
L-141	79 / 81	**SV/224**	Scania	**SV/226**	Scania	
LC-75	90 / 93	**SV/224 SV/224-A**		**SV/226 SV/226-RA**		
LK-140	75 / 78	**SV/224**	Scania	**SV/226**	Scania	
LKS-141	79 / 81	**SV/224**	Scania	**SV/226**	Scania	
LKT-141	79 / 81	**SV/224**	Scania	**SV/226**	Scania	
LS-100	71 / 76	**SV/224**	Scania	**SV/226**	Scania	
LS-101	78	**SV/224**	Scania	**SV/226**	Scania	
LS-110	72 / 82	**SV/224**	Scania	**SV/226**	Scania	
LS-111	76 / 81	**SV/224**	Scania	**SV/226**	Scania	
LS-76	64 / 71	**SV/222**	Scania	**SV/223**	Scania	3° eixo **SV/224**
LT-110	72 / 82	**SV/224**	Scania	**SV/226**	Scania	
LT-111	76 / 81	**SV/224**	Scania	**SV/226**	Scania	
LT-111	90 / 93	**SV/224 SV/224-A**		**SV/226 SV/226-RA**		
LT-76	64 / 71	**SV/222**	Scania	**SV/223**	Scania	3° eixo **SV/224**
P-93	95 /	**SV/229**	Scania	**SV/231**	Scania	
P-94 4x2	98 /	**SV/230**	Scania	**SV/231**	Scania	
P-94 6x2	98 /	**SV/230**	Scania	**SV/231**	Scania	3° eixo **SV/231**
P-94 6x4	98 /	**SV/230**	Scania	**SV/231**	Scania	3° eixo **SV/231**
P-114 4x2	98 /	**SV/230**	Scania	**SV/231**	Scania	
P-114 6x4	98 /	**SV/230**	Scania	**SV/231**	Scania	3° eixo **SV/231**
P-124 4x2	98 /	**SV/230**	Scania	**SV/231**	Scania	
P-124 6x2	98 /	**SV/230**	Scania	**SV/231**	Scania	3° eixo **SV/231**
P-124 6x4	98 /	**SV/230**	Scania	**SV/231**	Scania	3° eixo **SV/231**
P-124 8x2	98 /	**SV/230**	Scania	**SV/230**	Scania	
P-230	98 /	**SV/230**	Scania	**SV/231**	Scania	3° eixo **SV/231**
P-260 4X2	12 /	**SV/230**	Scania	**SV/230**	Scania	
P-310 4X2	12 /	**SV/230**	Scania	**SV/230**	Scania	
P-310 6X4	12 /	**SV/230**	Scania	**SV/230**	Scania	
P-310 8x2	13 /	**SV/230**	Scania	**SV/231**	Scania	

MODEL / *MODELO*	YEAR - *AÑO*	FRONT *DELANTERA*	SYSTEM *SISTEMA*	REAR *TRASERA*	SYSTEM *SISTEMA*	OBS.
SCANIA						
P-340 (P / G / R)	07 /	**SV/229 PD/116**	Scania	**SV/231 PD/116**	Scania	Freio a Tambor Freio a Disco
P-360 4X2	12 /	**SV/230**	Scania	**SV/230**	Scania	
P-360 6X2	12 /	**SV/230**	Scania	**SV/230**	Scania	
P-420	06 /	**SV/230**	Scania	**SV/231**	Scania	
R-94 4x2	98 /	**SV/230**	Scania	**SV/231**	Scania	
R-94 6x2	98 /	**SV/230**	Scania	**SV/231**	Scania	3° eixo **SV/231**
R-94 6x4	98 /	**SV/230**	Scania	**SV/231**	Scania	3° eixo **SV/231**
R-112 E	81 / 91	**SV/224**	Scania	**SV/226**	Scania	3° eixo **SV/226**
R-112 E	90 / 91	**SV/223**	Scania	**SV/227**	Scania	3° eixo **SV/227**
R-112 H	81 / 91	**SV/224**	Scania	**SV/226**	Scania	3° eixo **SV/226**
R-112 H	90 / 91	**SV/223**	Scania	**SV/227**	Scania	3° eixo **SV/227**
R-112 H	90 / 91	**SV/223**	Scania	**SV/227**	Scania	
R-112 MA	81 / 84	**SV/224**	Scania	**SV/226**	Scania	
R-113	90 / 93	**SV/224 SV/224-A**		**SV/226 SV/226-RA**		
R-113 E	93 /	**SV/229**		**SV/231**		3° eixo **SV/231** Llanta disco
R-113 E	91 / 93	**SV/223 SV/224**	Scania	**SV/226 SV/227**	Scania	3° eixo **SV/226 SV/227**
R-113 E	93 /	**SV/228 SV/229**	Scania	**SV/230 SV/231**	Scania	3° eixo **SV/230 SV/231**
R-113 H	91 / 93	**SV/223 SV/224**	Scania	**SV/226 SV/227**	Scania	3° eixo **SV/226 SV/227**
R-113 H	93 /	**SV/228 SV/229**	Scania	**SV/230 SV/231**	Scania	3° eixo **SV/230 SV/231**
R-113 H 4x2	94 /	**SV/228**		**SV/230**		
R-114 4x2	98 /	**SV/230**	Scania	**SV/231**	Scania	
R-114 6x4	98 /	**SV/230**	Scania	**SV/231**	Scania	3° eixo **SV/231**
R-124 4x2	98 /	**SV/230**	Scania	**SV/231**	Scania	
R-124 6x2	98 /	**SV/230**	Scania	**SV/231**	Scania	3° eixo **SV/231**
R-124 6x4	98 /	**SV/230**	Scania	**SV/231**	Scania	3° eixo **SV/231**
R-142 E	81 / 91	**SV/224**	Scania	**SV/226**	Scania	3° eixo **SV/226**
R-142 E	90 / 91	**SV/223**	Scania	**SV/227**	Scania	3° eixo **SV/227**
R-142 H	81 / 91	**SV/224**	Scania	**SV/226**	Scania	3° eixo **SV/226**
R-142 H	90 / 91	**SV/223**	Scania	**SV/227**	Scania	3° eixo **SV/227**
R-143 E	91 / 92	**SV/223 SV/224**	Scania	**SV/226 SV/227**	Scania	3° eixo **SV/226 SV/227**
R-143 H	91 / 93	**SV/223 SV/224**	Scania	**SV/226 SV/227**	Scania	3° eixo **SV/226 SV/227**
R-143 H	93 / 96	**SV/228 SV/229**	Scania	**SV/230 SV/231**	Scania	3° eixo **SV/230 SV/231**
R-144-LB	98 /	**PD/116**	Knorr	**PD/116**	Knorr	
R-400	06 /	**SV/230**	Scania	**SV/231**	Scania	3° eixo **SV/231**
R-400 4X2	12 /	**SV/230**	Scania	**SV/231**	Scania	
R-400 6X2	12 /	**SV/230**	Scania	**SV/231**	Scania	
R-440 4X2	12 /	**SV/230**	Scania	**SV/231**	Scania	
R-440 6X2	12 /	**SV/230**	Scania	**SV/231**	Scania	
R-440 6X4	12 /	**SV/230**	Scania	**SV/231**	Scania	
R-480 4X2	12 /	**SV/230**	Scania	**SV/231**	Scania	
R-480 6X2	12 /	**SV/230**	Scania	**SV/231**	Scania	
R-480 6X4	12 /	**SV/230**	Scania	**SV/231**	Scania	
R-560 6X2	12 /	**SV/230**	Scania	**SV/231**	Scania	
R-560 6X4	12 /	**SV/230**	Scania	**SV/231**	Scania	
R-620 6X2	12 /	**SV/230**	Scania	**SV/231**	Scania	
R-620 6X4	12 /	**SV/230**	Scania	**SV/231**	Scania	
R-400 4X2 HIGHLINE	12 /	**SV/230**	Scania	**SV/231**	Scania	
R-400 6X2 HIGHLINE	12 /	**SV/230**	Scania	**SV/231**	Scania	

MODEL / *MODELO*	YEAR - *AÑO*	FRONT *DELANTERA*	SYSTEM *SISTEMA*	REAR *TRASERA*	SYSTEM *SISTEMA*	OBS.
SCANIA						
R-440 4X2 HIGHLINE	12 /	**SV/230**	Scania	**SV/231**	Scania	
R-440 6X2 HIGHLINE	12 /	**SV/230**	Scania	**SV/231**	Scania	
R-440 6X4 HIGHLINE	12 /	**SV/230**	Scania	**SV/231**	Scania	
R-480 4X2 HIGHLINE	12 /	**SV/230**	Scania	**SV/231**	Scania	
R-480 6X2 HIGHLINE	12 /	**SV/230**	Scania	**SV/231**	Scania	
R-480 6X4 HIGHLINE	12 /	**SV/230**	Scania	**SV/231**	Scania	
R-560 6X2 HIGHLINE	12 /	**SV/230**	Scania	**SV/231**	Scania	
R-560 6X4 HIGHLINE	12 /	**SV/230**	Scania	**SV/231**	Scania	
R-620 6X2 HIGHLINE	12 /	**SV/230**	Scania	**SV/231**	Scania	
R-620 6X4 HIGHLINE	12 /	**SV/230**	Scania	**SV/231**	Scania	
S-112	83 / 91	**SV/224**	Scania	**SV/226**	Scania	
S-112	86 / 91	**SV/223**	Scania	**SV/227**	Scania	
S-112 (Articulado)	83 / 91	**SV/224**	Scania	**SV/226**	Scania	3° eixo **SV/226**
S-112 (Articulado)	86 / 91	**SV/223**	Scania	**SV/227**	Scania	3° eixo **SV/227**
S-113	91 / 93	**SV/223** **SV/224**	Scania	**SV/226** **SV/227**	Scania	
S-113	93 /	**SV/228** **SV/229**	Scania	**SV/230** **SV/231**	Scania	
S-113 (Articulado)	91 / 93	**SV/224**	Scania	**SV/226**	Scania	3° eixo **SV/226**
S-113 (Articulado)	91 / 94	**SV/223**	Scania	**SV/227**	Scania	3° eixo **SV/227**
S-113 (Articulado)	93 /	**SV/228** **SV/229**	Scania	**SV/230** **SV/231**	Scania	3° eixo **SV/230** **SV/231**
SERIE 4 - 114C / 114D / 114L	96 /	**PD/116**	Knorr	**PD/116**	Knorr	
SERIE 4 - 124C / 124D / 124L	96 /	**PD/116**	Knorr	**PD/116**	Knorr	
SERIE 4 - 144C / 144D / 144L	96 /	**PD/116**	Knorr	**PD/116**	Knorr	
SERIE 4 - 94C / 94D / 94G / 94L	96 /	**PD/116**	Knorr	**PD/116**	Knorr	
SERIE 4 - T 144G / T144L	96 /	**PD/116**	Knorr	**PD/116**	Knorr	
SERIE R - 340 / 380	04 /	**PD/116**	Knorr	**PD/116**	Knorr	
SERIE R - 420 / 420 Euro 4 / 470	04 /	**PD/116**	Knorr	**PD/116**	Knorr	
SERIE R - 500 / 580	04 /	**PD/116**	Knorr	**PD/116**	Knorr	
T-112 E	81 / 91	**SV/224**	Scania	**SV/226**	Scania	3° eixo **SV/226**
T-112 E	90 / 91	**SV/223**	Scania	**SV/227**	Scania	3° eixo **SV/227**
T-112 H	81 / 91	**SV/224**	Scania	**SV/226**	Scania	3° eixo **SV/226**
T-112 H	90 / 91	**SV/223**	Scania	**SV/227**	Scania	3° eixo **SV/227**
T-112 MA	81 / 84	**SV/224**	Scania	**SV/226**	Scania	
T-113	90 / 93	**SV/224** **SV/224-A**		**SV/226** **SV/226-RA**		
T-113 E	91 / 93	**SV/223** **SV/224**	Scania	**SV/226** **SV/227**	Scania	3° eixo **SV/226** **SV/227**
T-113 E	93 /	**SV/228** **SV/229**	Scania	**SV/230** **SV/231**	Scania	3° eixo **SV/230** **SV/231**
T-113 E	94 /	**SV/228**		**SV/230**		
T-113 H	91 / 93	**SV/223** **SV/224**	Scania	**SV/226** **SV/227**	Scania	3° eixo **SV/226** **SV/227**
T-113 H	93 /	**SV/228** **SV/229**	Scania	**SV/230** **SV/231**	Scania	3° eixo **SV/230** **SV/231**
T-113 H	94 /	**SV/228**		**SV/230**		
T-113 H	91 / 93	**SV/224**		**SV/226**		**SV/226** Llanta artillera
T-114 4x2	98 /	**SV/230**	Scania	**SV/231**	Scania	
T-114 6x4	98 /	**SV/230**	Scania	**SV/231**	Scania	3° eixo **SV/231**
T-124 4x2	98 /	**SV/230**	Scania	**SV/231**	Scania	
T-124 6x2	98 /	**SV/230**	Scania	**SV/231**	Scania	3° eixo **SV/231**
T-124 6x4	98 /	**SV/230**	Scania	**SV/231**	Scania	3° eixo **SV/231**
T-124-6B	99 /	**PD/116**	Knorr	**PD/116**	Knorr	
T-142 E	81 / 91	**SV/224**	Scania	**SV/226**	Scania	3° eixo **SV/226**
T-142 E	90 / 91	**SV/223**	Scania	**SV/227**	Scania	3° eixo **SV/227**

MODEL / *MODELO*	YEAR - *AÑO*	FRONT *DELANTERA*	SYSTEM *SISTEMA*	REAR *TRASERA*	SYSTEM *SISTEMA*	OBS.
SCANIA						
T-142 H	81 / 91	**SV/224**	Scania	**SV/226**	Scania	3° eixo **SV/226**
T-142 H	90 / 91	**SV/223**	Scania	**SV/227**	Scania	3° eixo **SV/227**
T-142 MA	81 / 84	**SV/224**	Scania	**SV/226**	Scania	
T-143 E	91 / 93	**SV/223** **SV/224**	Scania	**SV/226** **SV/227**	Scania	3° eixo **SV/226** **SV/227**
T-143 E	93 / 96	**SV/228** **SV/229**	Scania	**SV/230** **SV/231**	Scania	3° eixo **SV/230** **SV/231**
T-143 H	91 / 93	**SV/223** **SV/224**	Scania	**SV/226** **SV/227**	Scania	3° eixo **SV/226** **SV/227**
T-143 H	93 / 96	**SV/228** **SV/229**	Scania	**SV/230** **SV/231**	Scania	3° eixo **SV/230** **SV/231**
T-94 4x2	98 /	**SV/230**	Scania	**SV/231**	Scania	
T-94 6x2	98 /	**SV/230**	Scania	**SV/231**	Scania	3° eixo **SV/231**
T-94 6x4	98 /	**SV/230**	Scania	**SV/231**	Scania	3° eixo **SV/231**
SCANIA AXLES						
413 x 127,0 mm (16.1/4 x 5")	/ 07-88			**17161 00**		
413 x 127,0 mm (16.1/4 x 5")	08-88 /			**17991 00**		
413 x 178,0 mm (16.1/4 x 7")	/ 07-88			**19075 00**		
413 x 178,0 mm (16.1/4 x 7")	08-88 /			**19931 00**		
413 x 203,0 mm (16.1/4 x 8")	/ 07-88			**19393 00**		
413 x 203,0 mm (16.1/4 x 8")	08-88 /			**19932 00**		
413 x 254,0 mm (16.1/4 x 10")	/ 07-88			**19647 00**		
413 x 254,0 mm (16.1/4 x 10")	08-88 /			**19933 00**		
SCANIA TRUCKS						
114 C/340	05-96 /	**19931 00** **19932 00**		**17991 00** **19932 00** **19933 00**		7" or 8" front brake 5", 8" or 10" rear brake
114 C/380	03-98 /	**19931 00** **19932 00**		**17991 00** **19932 00** **19933 00**		7" or 8" front brake 5", 8" or 10" rear brake
114 G/340	05-96 /	**19931 00** **19932 00**		**17991 00** **19932 00** **19933 00**		7" or 8" front brake 5", 8" or 10" rear brake
114 G/380	03-98 /	**19931 00** **19932 00**		**17991 00** **19932 00** **19933 00**		7" or 8" front brake 5", 8" or 10" rear brake
114 L/340	05-96 /	**19931 00** **19932 00**		**17991 00** **19932 00** **19933 00**		7" or 8" front brake 5", 8" or 10" rear brake
114 L/380	03-98 /	**19931 00** **19932 00**		**17991 00** **19932 00** **19933 00**		7" or 8" front brake 5", 8" or 10" rear brake
124 C/360	09-96 /	**19931 00** **19932 00**		**17991 00** **19932 00** **19933 00**		7" or 8" front brake 5", 8" or 10" rear brake
124 C/400	09-96 /	**19931 00** **19932 00**		**17991 00** **19932 00** **19933 00**		7" or 8" front brake 5", 8" or 10" rear brake
124 G/360	05-96 /	**19931 00** **19932 00**		**17991 00** **19932 00** **19933 00**		7" or 8" front brake 5", 8" or 10" rear brake
124 G/400	05-96 /	**19931 00** **19932 00**		**17991 00** **19932 00** **19933 00**		7" or 8" front brake 5", 8" or 10" rear brake
124 L/360	09-96 /	**19931 00** **19932 00**		**17991 00** **19932 00** **19933 00**		7" or 8" front brake 5", 8" or 10" rear brake
124 L/400	09-96 /	**19931 00** **19932 00**		**17991 00** **19932 00** **19933 00**		7" or 8" front brake 5", 8" or 10" rear brake
124 L/420	09-97 /	**19931 00** **19932 00**		**17991 00** **19932 00** **19933 00**		7" or 8" front brake 5", 8" or 10" rear brake

MODEL / *MODELO*	YEAR - *AÑO*	FRONT *DELANTERA*	SYSTEM *SISTEMA*	REAR *TRASERA*	SYSTEM *SISTEMA*	OBS.
SCANIA TRUCKS						
144 C/460	09-96 /	**19931 00 19932 00**		**17991 00 19932 00 19933 00**		7" or 8" front brake 5", 8" or 10" rear brake
144 C/530	09-96 /	**19931 00 19932 00**		**17991 00 19932 00 19933 00**		7" or 8" front brake 5", 8" or 10" rear brake
144 G/460	04-96 /	**19931 00 19932 00**		**17991 00 19932 00 19933 00**		7" or 8" front brake 5", 8" or 10" rear brake
144 G/530	04-96 /	**19931 00 19932 00**		**17991 00 19932 00 19933 00**		7" or 8" front brake 5", 8" or 10" rear brake
144 L/460	11-95 /	**19931 00 19932 00**		**17991 00 19932 00 19933 00**		7" or 8" front brake 5", 8" or 10" rear brake
144 L/530	11-95 /	**19931 00 19932 00**		**17991 00 19932 00 19933 00**		7" or 8" front brake 5", 8" or 10" rear brake
94 C/260	12-96 /	**19931 00 19932 00**		**17991 00 19932 00 19933 00**		7" or 8" front brake 5", 8" or 10" rear brake
94 C/310	08-96 /	**19931 00 19932 00**		**17991 00 19932 00 19933 00**		7" or 8" front brake 5", 8" or 10" rear brake
94 D/220	08-96 /	**19931 00 19932 00**		**17991 00 19932 00 19933 00**		7" or 8" front brake 5", 8" or 10" rear brake
94 D/260	08-96 /	**19931 00 19932 00**		**17991 00 19932 00 19933 00**		7" or 8" front brake 5", 8" or 10" rear brake
94 D/310	12-96 /	**19931 00 19932 00**		**17991 00 19932 00 19933 00**		7" or 8" front brake 5", 8" or 10" rear brake
94 G/220	08-96 /	**19931 00 19932 00**		**17991 00 19932 00 19933 00**		7" or 8" front brake 5", 8" or 10" rear brake
94 G/260	08-96 /	**19931 00 19932 00**		**17991 00 19932 00 19933 00**		7" or 8" front brake 5", 8" or 10" rear brake
94 G/310	08-96 /	**19931 00 19932 00**		**17991 00 19932 00 19933 00**		7" or 8" front brake 5", 8" or 10" rear brake
94 L/310	08-96 /	**19931 00 19932 00**		**17991 00 19932 00 19933 00**		7" or 8" front brake 5", 8" or 10" rear brake
G 112 M 4x2	81 / 88	**17161 00**		**19393 00**		
G 82 M 6x2	81 / 88	**17161 00**		**19393 00**		17161 00 2nd rear axle
G 82 M / MD 4x2	81 / 88	**17161 00**		**19393 00**		
G 92 M 6x2	84 / 88	**19075 00**		**19647 00**		17161 00 2nd rear axle
G 92 M / MD 4x2	84 / 88	**19075 00**		**19393 00**		
G / P / R / T 113 E / H / M	88 /	**17991 00**		**19932 00**		5" front brake - 8" rear brake
G / P / R / T 113 E / H / M	88 /	**19931 00**		**19933 00**		7" front brake - 10" rear brake
G / P / R / T 143 E / H / M	88 /	**17991 00**		**19932 00**		5" front brake - 8" rear brake
G / P / R / T 143 E / H / M	88 /	**19931 00**		**19933 00**		7" front brake - 10" rear brake
G / P / R / T 93 E / H / M	88 /	**17991 00**		**19932 00**		5" front brake - 8" rear brake
G / P / R / T 93 E / H / M	88 /	**19931 00**		**19933 00**		7" front brake - 10" rear brake
P-112 H 4x2	81 / 88	**19075 00**		**19393 00**		
P-112 H 6x2	81 / 88	**19075 00**		**19393 00**		19075 00 2nd rear axle
P-112 H / E 6x4	81 / 88	**19075 00**		**19393 00**		19393 00 2nd rear axle
P-112 M 6x2	81 / 88	**17161 00**		**19393 00**		17161 00 2nd rear axle
P-112 M 6x4	81 / 88	**17161 00**		**19393 00**		19393 00 2nd rear axle
P-112 M, MA 4x2	81 / 88	**17161 00**		**19393 00**		
P-82 H 4x2	81 / 88	**19075 00**		**19393 00**		
P-82 H 6x2	81 / 88	**19075 00**		**19393 00**		19075 00 2nd rear axle

MODEL / *MODELO*	YEAR - *AÑO*	FRONT *DELANTERA*	SYSTEM *SISTEMA*	REAR *TRASERA*	SYSTEM *SISTEMA*	OBS.
SCANIA TRUCKS						
P-82 M 6x2	81 / 88	**17161 00**		**19393 00**		17161 00 2nd rear axle
P-82 M 6x4	81 / 88	**17161 00**		**19393 00**		19393 00 2nd rear axle
P-82 M / MA 4x2	81 / 88	**17161 00**		**19393 00**		
P-92 6x2 / 6x4	85 / 88	**19075 00**		**19075 00**		19075 00 2nd rear axle 19393 00 2nd rear axle 8" brake
P-92 H 4x2	84 / 88	**19075 00**		**19647 00**		
P-92 M 8x4	85 / 88	**19075 00**		**19075 00**		19075 00 2nd front & rear axle
P-92 M / H 6x2	84 / 88	**19075 00**		**19647 00**		17161 00 2nd rear axle
P-92 M / MA 4x2	84 / 88	**19075 00**		**19393 00**		
R 112 H 6x2	81 / 88	**19075 00**		**19393 00**		19075 00 2nd rear axle
R 112 H / E 4x2	81 / 88	**19075 00**		**19393 00**		
R 112 H / E 6x4	81 / 88	**19075 00**		**19393 00**		19393 00 2nd rear axle
R 112 M 6x2	81 / 88	**17161 00**		**19393 00**		17161 00 2nd rear axle
R 112 M 6x4	81 / 88	**17161 00**		**19393 00**		19393 00 2nd rear axle
	81 / 88	**17161 00**		**19393 00**		
R 142 H 4x2	81 / 88	**19075 00**		**19393 00**		
R 142 H 6x2	81 / 88	**19075 00**		**19393 00**		19075 00 2nd rear axle
R 142 H / E 6x4	81 / 88	**19075 00**		**19393 00**		19393 00 2nd rear axle
R 142 M 6x2	81 / 88	**17161 00**		**19393 00**		17161 00 2nd rear axle
R 142 M 6x4	81 / 88	**17161 00**		**19393 00**		19393 00 2nd rear axle
R 142 M / MA 4x2	81 / 88			**19393 00**		
R 143 MA Intercooler	83 /	**19075 00**		**19393 00**		
T 112 H 4x2	80	**19075 00**		**19393 00**		
T 112 H 6x2	80	**19075 00**		**19393 00**		17161 00 2nd rear axle
T 112 H 6x2	81 / 88	**19075 00**		**19393 00**		19075 00 2nd rear axle
T 112 H 6x4	80	**17161 00**		**19393 00**		19393 00 2nd rear axle
T 112 H / E 4x2	81 / 88	**19075 00**		**19393 00**		
T 112 H / E 6x4	81 / 88	**19075 00**		**19393 00**		19393 00 2nd rear axle
T 112 M 4x2	80	**17161 00**		**19075 00**		
T 112 M 4x2	81 / 88	**17161 00**		**19393 00**		
T 114 G/340	05-96 /	**19931 00** **19932 00**		**17991 00** **19932 00** **19933 00**		7" or 8" front brake 5", 8" or 10" rear brake
T 114 L/340	05-96 /	**19931 00** **19932 00**		**17991 00** **19932 00** **19933 00**		7" or 8" front brake 5", 8" or 10" rear brake
T 124 G/360	03-97 /	**19931 00** **19932 00**		**17991 00** **19932 00** **19933 00**		7" or 8" front brake 5", 8" or 10" rear brake
T 124 G/400	03-97 /	**19931 00** **19932 00**		**17991 00** **19932 00** **19933 00**		7" or 8" front brake 5", 8" or 10" rear brake
T 124 L/360	02-97 /	**19931 00** **19932 00**		**17991 00** **19932 00** **19933 00**		7" or 8" front brake 5", 8" or 10" rear brake
T 124 L/400	02-97 /	**19931 00** **19932 00**		**17991 00** **19932 00** **19933 00**		7" or 8" front brake 5", 8" or 10" rear brake
T 142 E 6x4	80	**17161 00**		**19393 00**		19393 00 2nd rear axle
T 142 E 6x4	81 / 88	**19075 00**		**19393 00**		19393 00 2nd rear axle
T 142 H 4x2	81 / 88	**19075 00**		**19393 00**		
T 142 H 6x2	80	**19075 00**		**19393 00**		17161 00 2nd rear axle
T 142 H 6x2	81 / 88	**19075 00**		**19393 00**		19075 00 2nd rear axle
T 144 G/460	03-97 /	**19931 00** **19932 00**		**17991 00** **19932 00** **19933 00**		7" or 8" front brake 5", 8" or 10" rear brake
T 144 G/530	03-97 /	**19931 00** **19932 00**		**17991 00** **19932 00** **19933 00**		7" or 8" front brake 5", 8" or 10" rear brake

MODEL / *MODELO*	YEAR - *AÑO*	FRONT *DELANTERA*	SYSTEM *SISTEMA*	REAR *TRASERA*	SYSTEM *SISTEMA*	OBS.
SCANIA TRUCKS						
T 144 L/460	03-97 /	**19931 00** **19932 00**		**17991 00** **19932 00** **19933 00**		7" or 8" front brake 5", 8" or 10" rear brake
T 144 L/530	03-97 /	**19931 00** **19932 00**		**17991 00** **19932 00** **19933 00**		7" or 8" front brake 5", 8" or 10" rear brake
T 82 H 4x2	80	**19075 00**		**19393 00**		
T 82 H 4x2	81 / 88	**19075 00**		**19393 00**		
T 82 H 6x2	80	**19075 00**		**19393 00**		17161 00 2nd rear axle
T 82 H 6x2	81 / 88	**19075 00**		**19393 00**		19075 00 2nd rear axle
T 82 M 4x2	80	**17161 00**		**19075 00**		
T 82 M 4x2	81 / 88	**17161 00**		**19393 00**		
T 92 H 4x2	84 / 88	**19075 00**		**19647 00**		
T 92 H 6x2	84 / 88	**19075 00**		**19647 00**		17161 00 2nd rear axle
SCANIA BUSES						
BF 110	68 /	**17161 00**		**19393 00**		
BR 110	68 /	**17161 00**		**19393 00**		
BR 111 DH	74 /	**17161 00**		**19647 00**		
BR 112	79 /	**17161 00**		**19647 00**		
BR 112 A		**19075 00**		**19393 00**		19647 00 2nd rear axle
BR 116	78 /	**17161 00**		**19647 00**		19393 00 2nd rear axle
BR 86	79 /	**17161 00**		**19393 00**		or 19647 00 rear alternative
C 50 Metropol		**17161 00**		**17161 00**		
CF 50 Metropol		**17161 00**		**17161 00**		
CN 112	08-88 /	**19931 00**		**19933 00**		
CR 110 Metro-Scania	70 /	**17161 00**		**19393 00**		
CR 111 M	75 /	**17161 00**		**19647 00**		
CR 112	08-88 /	**19931 00**		**19933 00**		
K 112 CL	82 / 88	**19075 00**		**19647 00**		17161 00 trailer axle
K 112 T	84 / 88	**19075 00**		**19647 00**		17161 00 trailer axle
K 113 CRB / TRS	88 /	**19931 00**		**19933 00**		
K 82	82 /	**19075 00**		**19647 00**		or 19393 00 front alternative
K 92 CR	85 / 88	**19075 00**		**19647 00**		
K 93 CRB	88 /	**19931 00**		**19933 00**		
N 112 AL	08-88 /	**19931 00**		**19933 00**		19932 00 2nd rear axle
N 112 CLB	08-88 /	**19931 00**		**19933 00**		
N 113 CRB / DRB	88 /	**19931 00**		**19933 00**		
SCHIFFER						
CARRETA	/ 79			**4514-F**	Bendix	2 eixos
CARRETA	/ 79			**4515-C**		3 eixos
CARRETA	80 /			**4515-C** **4515-G**		2 eixos
CARRETA	80 /			**CA/32**	Master	3 eixos
SCION						
TC	05 / 10	**PD/788**				
SEAT						
ALTEA 1.4L	09 / 10	**PD/1000-B**		**PD/1030**		
ALTEA 2.0L / 1.8L	05 / 09	**PD/1000-B**		**PD/1030**		
AROSA 1.0	05-97 /	**PD/368**	Teves			disco ventilado
AROSA 1.4	05-97 /	**PD/368**	Teves			disco ventilado
AROSA 1.4 TDi	05-97 /	**PD/368**	Teves			disco ventilado
AROSA 1.7 SDi	05-97 /	**PD/368**	Teves			disco ventilado

MODEL / *MODELO*	YEAR - *AÑO*	FRONT *DELANTERA*	SYSTEM *SISTEMA*	REAR *TRASERA*	SYSTEM *SISTEMA*	OBS.
SEAT						
CORDOBA	95 /			**VW/276-CPA**		Freio traseiro Ø200,0x40,0mm
CORDOBA	01 / 03	**PD/337**		**PD/362**		
CORDOBA	00 /	**PD/443**	Girling			
CORDOBA 1.4 16V	10-02 /	**PD/520**	Girling			
CORDOBA 1.4 CLX / 1.6 / 1.8	/ 99	**PD/328**	Kelsey Hayes			Discos Sólidos
CORDOBA 1.4 CLX / 1.6 / 1.8	/ 99	**PD/367**	Girling			Discos Sólidos
CORDOBA 1.4 TDI	10-02 /	**PD/520**	Girling			
CORDOBA 1.6	93 /	**PD/328**	K. Hayes			
CORDOBA 1.6L	01 / 03	**PD/413** **PD/337**				
CORDOBA 1.6L	04 / 09	**PD/58**		**PD/59**		
CORDOBA 1.7 SDi	97 /	**PD/367**	Girling	**PD/362**	Girling	Discos Sólidos
CORDOBA 1.8	93 /	**PD/328** **PD/329**	K. Hayes Girling	**PD/362**	Girling	
CORDOBA 1.8	94 / 99	**PD/368**	Girling	**PD/362**	Girling	
CORDOBA 1.8 GLX	94 / 99	**PD/368**	Girling	**PD/362**	Girling	Discos Ventilados
CORDOBA 1.8 GTi 16 V / 2.0 GTi	93 / 99	**PD/329**	Girling	**PD/362**	Girling	Discos Ventilados
CORDOBA 1.8 GTi 16 V / 2.0 GTi	93 / 99	**PD/337**	Girling	**PD/362**	Girling	Discos Ventilados
CORDOBA 1.9 D / SDi / TD	/ 99	**PD/328**	Kelsey Hayes	**PD/362**	Girling	Discos Sólidos
CORDOBA 1.9 D / SDi / TD	97 /	**PD/328**	Kelsey Hayes			Discos Sólidos
CORDOBA 1.9 D / SDi / TD	97 /	**PD/367**	Girling			Discos Sólidos
CORDOBA 1.9 SDI	10-02 /	**PD/520**	Girling			
CORDOBA 1.9 TDI	10-02 /	**PD/520**	Girling			
CORDOBA 1.9 TDi/ 2.0 GTi 16 V	96 / 99	**PD/413**	Girling	**PD/362**	Girling	
CORDOBA 2.0	93 /	**PD/329**	Girling	**PD/362**	Girling	
CORDOBA 2.0L	03 / 09	**PD/520**		**PD/59**		
CORDOBA VARIO 1.4 / 1.6 i / 1.7 / 1.9 SDi	97 /	**PD/328**	Kelsey Hayes	**PD/362**	Girling	Discos Sólidos
CORDOBA VARIO 1.4 / 1.6 i / 1.7 / 1.9 SDi	97 /	**PD/367**	Girling	**PD/362**	Girling	Discos Sólidos
CORDOBA VARIO 1.9 TDi	97 /	**PD/413**	Girling	**PD/362**	Girling	
FREETRACK 2.0L	09 / 10	**PD/1000-B**		**PD/1030**		
IBIZA	01 / 03	**PD/337**		**PD/59**		
IBIZA	04 / 08	**PD/58**		**PD/59**		
IBIZA	00 /	**PD/443**	Girling			Discos Sólidos
IBIZA 1.6L	01 / 02	**PD/413** **PD/337**				
IBIZA 2.0L	09 / 10	**PD/1000-B**				
IBIZA 1.4 16V	02-02 /	**PD/520**	Girling			
IBIZA 1.4 / 1.6 / 1.6 i / 1.8 CLX / GLX / GLXi	93 / 99	**PD/328**	Kelsey Hayes			Discos Sólidos
IBIZA 1.4 / 1.6 / 1.6 i / 1.8 CLX / GLX / GLXi	93 / 99	**PD/367**	Girling			Discos Sólidos
IBIZA 1.6	95 /			**VW/276-CPA**		Freio traseiro Ø200,0x40,0mm
IBIZA 1.7 SDi / 1.9 SDi / TD / TDi	93 / 99	**PD/328**	Kelsey Hayes			Discos Sólidos
IBIZA 1.7 SDi / 1.9 SDi / TD / TDi	93 / 99	**PD/367**	Girling			Discos Sólidos
IBIZA 1.8	95 /			**VW/276-CPA**		Freio traseiro Ø200,0x40,0mm
IBIZA 1.8 16V	93 /	**PD/329**	Girling	**PD/362**	Girling	
IBIZA 1.8 GLX	94 /	**PD/368**	Girling			Discos Ventilados
IBIZA 1.8 GTi 16V / 2.0 GTi 16V / COUPE	93 / 99	**PD/329**	Girling	**PD/362**	Girling	Discos Ventilados
IBIZA 1.8 GTi 16V / 2.0 GTi 16V / COUPE	93 / 99	**PD/337**	Girling	**PD/362**	Girling	Discos Ventilados
IBIZA 1.9 TDi	99 /	**PD/413**	Girling	**PD/362**	Girling	
IBIZA 1.9 Tdi	02-02 /	**PD/520**	Girling			
IBIZA 2.0	95 /			**VW/276-CPA**		Freio traseiro Ø200,0x40,0mm
IBIZA 2.0 16V	93 /	**PD/329**	Girling	**PD/362**	Girling	
IBIZA 2.0 GTi	96 / 99	**PD/413**	Girling	**PD/362**	Girling	
IBIZA FR 1.8L	04 / 09	**PD/520**		**PD/59**		
INCA 1.9 D SDi	97 /	**PD/413**	Girling	**VW/280-CPA**	Ate	Freio traseiro Ø230,0x32,0mm

MODEL / *MODELO*	YEAR - *AÑO*	FRONT *DELANTERA*	SYSTEM *SISTEMA*	REAR *TRASERA*	SYSTEM *SISTEMA*	OBS.
SEAT						
LEON 1.8L	01 / 04	**PD/58-B**		**PD/59**		
LEON 2.0L	06 / 09	**PD/1000-B**		**PD/1030**		
LEON 1.6 / 1.8 20V / 1.9 TDi	99 /	**PD/58 PD/58-B**	Teves			
LEON TURBO 1.8L	01 / 06	**PD/340-B**		**PD/59**		
TOLEDO	10-04 /	**PD/1000-B**	Teves	**PD/1030**	Lucas	
TOLEDO 1.8L	01 / 04	**PD/58-B**		**PD/59**		
TOLEDO 2.0L	06 / 09	**PD/1000-B**		**PD/1030**		
TOLEDO 1.6 i	98 /	**PD/58 PD/58-B**	Teves			
TOLEDO 1.6 i CL / GL / 1.9 TD GLX	/ 96	**PD/466**	Girling			Discos Ventilados
TOLEDO 1.6 i / 1.9 D	/ 98	**PD/328**	Kelsey Hayes	**PD/362**	Girling	Discos Sólidos
TOLEDO 1.6 i / 1.9 D	/ 98	**PD/367**	Girling	**PD/362**	Girling	Discos Sólidos
TOLEDO 1.6i	11-04 /	**PD/1000-B**	Teves	**PD/1030**	Lucas	
TOLEDO 1.8	/ 96	**PD/328**	Kelsey Hayes	**PD/362**	Girling	Discos Sólidos
TOLEDO 1.8	/ 96	**PD/367**	Girling	**PD/362**	Girling	Discos Sólidos
TOLEDO 1.8 16V	91 /	**PD/329**	Girling	**PD/362**	Girling	
TOLEDO 1.8 i 16V GT / 2.0 i 16V	91 / 99	**PD/329**	Girling	**PD/362**	Girling	Discos Ventilados
TOLEDO 1.8 i 16V GT / 2.0 i 16V	91 / 99	**PD/337**	Girling	**PD/362**	Girling	Discos Ventilados
TOLEDO 1.8 i 20V / 1.9 TDi	98 /	**PD/58 PD/58-B**	Teves	**PD/362**	Girling	
TOLEDO 1.8 i CL / GL / GLX 16V	/ 96	**PD/466**	Girling	**PD/362**	Girling	
TOLEDO 1.8 SE / SXE / TD	93 / 96	**PD/328**	Kelsey Hayes	**PD/362**	Girling	Discos Sólidos
TOLEDO 1.8 SE / SXE / TD	93 / 96	**PD/367**	Girling	**PD/362**	Girling	Discos Sólidos
TOLEDO 1.9 D / SDi / TD / TDi	/ 99	**PD/328**	Kelsey Hayes	**PD/362**	Girling	Discos Sólidos
TOLEDO 1.9 D / SDi / TD / TDi	/ 99	**PD/367**	Girling	**PD/362**	Girling	Discos Sólidos
TOLEDO 1.9 TDi	91 / 99	**PD/413**	Girling			
TOLEDO 1.9 Tdi	11-04 /	**PD/1000-B**	Teves	**PD/1030**	Lucas	
TOLEDO 2.0	91 /	**PD/329**	Girling	**PD/362**	Girling	
TOLEDO 2.0 FSi	11-04 /	**PD/1000-B**	Teves	**PD/1030**	Lucas	
TOLEDO 2.0 i GL / GLX / GT	/ 96	**PD/466**	Girling	**PD/362**	Girling	
TOLEDO 2.0 TDi	11-04 /	**PD/1000-B**	Teves	**PD/1030**	Lucas	
TOLEDO TURBO	01 / 06	**PD/340-B**		**PD/59**		

SEDDON ATKINSON						
211 SERIES - 2.11 4x2	88 / 09-92	**19613/614 00**		**19613/614 00**		F & R: 4 x 19613 / 4 x 19614
300 SERIES - T 17 L25 / T 17 L29 4x2	82 / 86	**19613/614 00**		**19613/614 00**		
300 SERIES - T 22 L29 6x2 / T 24 L29 6x4	82 / 86	**19613/614 00**		**19613/614 00**		19613/614 00 2nd rear axles
300 SERIES - T 24 L29 6x4	82 / 86	**19613/614 00**		**19613/614 00**		19613/614 00 2nd rear axles
311 SERIES - 3.11 6x4 / 8x4	86 / 11-90	**19613/614 00**		**19613/614 00**		19613/614 00 2nd front & rear axles
394 x 152,0 mm				**19072 00**		
394 x 177,8 mm				**19111 00**		
401 SERIES - T 17 C24 / C29 / G20 / G25 / R26 / R29 / R32	80 / 86	**19613/614 00**		**19613/614 00**		
401 SERIES - T 22 C29 / C32 / R30 / T 24 C32 / R30	82 / 86	**19613/614 00**		**19613/614 00**		19613/614 00 2nd front & rear axles
410 x 200,0 mm				**19071 00**		
411 SERIES - 4.11 4x2	86 / 88	**19613/614 00**		**19613/614 00**		
411 SERIES - 4.11 6x4	86 / 08-91	**19613/614 00**		**19613/614 00**		19613/614 00 2nd rear axles
411 SERIES - 4.11 8x4	86 /	**19613/614 00**		**19613/614 00**		19613/614 00 2nd front & rear axles
Alternative to 19613/614 00 at following series: 211, 311, 401 (only rear axle), 411 and Stratos.				**19017/997 00**		
STRATOS 17.21P / 17.27L / 17.38C / 17.38P / 17.41C 4x2	90 / 94	**19613/614 00**		**19613/614 00**		
STRATOS 17.30L / 17.33L / 17.33P 4x2	10-88 /	**19613/614 00**		**19613/614 00**		

MODEL / *MODELO*	YEAR - *AÑO*	FRONT *DELANTERA*	SYSTEM *SISTEMA*	REAR *TRASERA*	SYSTEM *SISTEMA*	OBS.
SEDDON ATKINSON						
STRATOS 17.32C / 17.35C / 17.37C / 17.40C / 17.40P 4x2	08-88 / 12-93	**19613/614 00**		**19613/614 00**		
STRATOS 17.47C 4x2	01-91 / 08-93	**19613/614 00**				
STRATOS 22.30L / 22.32C / 22.32P / 22.33L / 22.33P	89 /	**19613/614 00**		**19613/614 00**		19613/614 00 2nd rear axle
STRATOS 22.37C / 22.40C / 22.40P (6x2)	89 /	**19613/614 00**		**19613/614 00**		19613/614 00 2nd rear axle
STRATOS 22.38C / 22.38P / 22.41C (6x2)	01-92 /	**19613/614 00**		**19613/614 00**		19613/614 00 2nd rear axle
STRATOS 22.47C (6x2)	09-90 / 02-93	**19613/614 00**		**19613/614 00**		19613/614 00 2nd rear axle
STRATOS TC 17.28L / TC 17.37C / TC 17.41C	09-90 /	**19613/614 00**		**19613/614 00**		
STRATOS TC 17.32C	08-88 / 12-93	**19613/614 00**		**19613/614 00**		
STRATOS TC 22.32C / TC 22.32L / TC 22.33P / TC 22.40P	04-89 /	**19613/614 00**		**19613/614 00**		19613/614 00 2nd rear axle
STRATOS TC 22.38P / TC 22.41C	03-92 /	**19613/614 00**		**19613/614 00**		19613/614 00 2nd rear axle
SIAM DI TELLA						
1500 Di Tella	61 / 63			**855-RA**		
1500 Special Di Tella	60 / 66			**855-RA**		
ARGENTA 0.5 Ton.	61 / 63	**855-RA**		**855-RA**		
ARGENTA 0.5 Ton.	64 / 66			**855-RA**		
MAGNETTE Rural-1500 Di Tella	63 / 66			**855-RA**		
RILLEY MORRIS M.G.				**855-RA**		
RURAL BM 631	66 / 67			**855-RA**		
SKODA						
FABIA 1.0	99 / 02	**PD/368**	Teves			disco ventilado
FABIA 1.2	08-02 /	**PD/368**	Teves			disco ventilado
FABIA 1.4		**PD/73-B**				Equador
FABIA 1.4	11-00 /	**PD/368**	Teves			disco ventilado
FABIA 1.4 16V	12-99 /	**PD/368**	Teves			disco ventilado
FABIA 1.4 TDi	04-03 /	**PD/368**	Teves			disco ventilado
FABIA 1.9 TDi	07-01 /	**PD/368**	Teves			disco ventilado
FABIA 2.0	12-99 /	**PD/368**	Teves			disco ventilado
FABIA 2.0	99 /	**PD/520**	Girling			
SMART						
SMART FOR TWO COUPÊ II	07 /	**PD/1355**				
SMB						
HALDEX INTRADISC DB22 - 22.5"		**PD/170**				
SOR						
SOR 9.5	01 /			**PD/160**	Knorr	
SOR 10.5	01 /			**PD/160**	Knorr	
SSANGYONG						
ACTYON 2.0 4X4	08 /	**PD/630**	Akebono	**PD/725**	Mando	
ACTYON SPORTS PICK-UP	08 /	**PD/630**	Akebono	**PD/725**	Mando	
KORANDO 2.3 TD	96 /	**PD/471-A**	Girling	**PD/470**	Girling	
KORANDO 2.9 TD	96 /	**PD/471-A**	Girling	**PD/470**	Girling	
KORANDO 601 D / 602 D	96 /	**PD/471-A**	Akebono	**PD/470**	Girling	
KORANDO 601 TDI / 602 TDI	99 /	**PD/471-A**	Akebono	**PD/470**	Girling	
KORANDO Family	/ 93	**PD/453**	Akebono			
KORANDO Family	93 / 96	**PD/471-A**	Akebono	**PD/470**	Girling	
KORANDO Soft Top	98 /	**PD/471-A**	Akebono	**PD/470**	Girling	
KORANDO 2.0 E-XDI 2WD / 4WD	10 /	**PD/1287**		**PD/1368**		
KYRON 2.0 Xdi	05 /	**PD/630**	Akebono			

MODEL / *MODELO*	YEAR - *AÑO*	FRONT *DELANTERA*	SYSTEM *SISTEMA*	REAR *TRASERA*	SYSTEM *SISTEMA*	OBS.
SSANGYONG						
MUSSO 2.0 TD	96 /	**PD/471-A**	Girling	**PD/470**	Girling	
MUSSO 2.3 TD	96 /	**PD/471-A**	Girling	**PD/470**	Girling	
MUSSO 2.9 TDI	96 /	**PD/471-A**	Girling	**PD/470**	Girling	
MUSSO 601	96 /	**PD/471-A**	Akebono	**PD/470**	Girling	
MUSSO 601 TDI / 602 TDI	99 /	**PD/471-A**	Akebono	**PD/470**	Girling	
MUSSO 602 Full	95 /	**PD/471-A**	Akebono	**PD/470**	Girling	
REXTON	03 /	**PD/630**	Akebono	**PD/725**	Mando	
STERLING						
AT 9500	04 / 06	**4703**		**4707**		
LT 9500	01 / 03	**4703**		**4706**		
ST 9500	01 / 03	**4703**		**4706**		
SUBARU						
BAJA	03 / 06			**PD/619**	Akebono	
BAJA	03	**PD/749**				
COUPE SVX	93 /	**PD/427**	Akebono			
FORESTER	03 / 04	**PD/749**				
FORESTER	09 / 10	**PD/749**		**PD/813**		
FORESTER	98 / 02	**PD/613**	Akebono			Aro 15”
FORESTER 1.5L	07 / 08	**PD/379**				
IMPREZA	03 / 04	**PD/749**				
IMPREZA / IMPREZA RS	93 / 98			**PD/778**		
IMPREZA	97 / 02	**PD/613**	Akebono			Aro 15”
IMPREZA	93 / 96	**PD/423**	Sumitomo			
IMPREZA	08 / 10	**PD/749**		**PD/813**		
IMPREZA	00 / 02			**PD/619**	Akebono	
IMPREZA	97 / 01	**PD/614**	Akebono			Aro 14”
IMPREZA 1.6	93 /	**PD/423**	Sumitomo			
IMPREZA 1.8	93 /	**PD/423**	Sumitomo			
IMPREZA WRX	03			**PD/619**	Akebono	
JUSTY 1.0 4WD	88 /	**PD/75**	Sumitomo			
JUSTY 1.0 DL / GLS	83 / 88	**PD/75**	Sumitomo			
LEGACY	90 / 99			**PD/778**		
LEGACY	05	**PD/749**		**PD/813**		
LEGACY	90 / 94	**PD/423**	Sumitomo			
LEGACY	97 / 99	**PD/614**	Akebono			Aro 14”
LEGACY	98 / 02	**PD/613**	Akebono			Aro 15”
LEGACY 2.0R / 3.0R 2.0L / 3.0L	08 / 09	**PD/1067**		**PD/619**		
LEGACY 2.5I	06 / 10	**PD/749**		**PD/813**		
LEGACY 3.0I	04	**PD/749**		**PD/813**		
LEGACY 4 cil	03	**PD/749**				
LEGACY GT 3.0L	06 / 07	**PD/1067**		**PD/619**		
LEGACY I 1.8 16V	89 / 95	**PD/423**	Sumitomo			
LEGACY I 2.2 16V	89 / 95	**PD/423**	Sumitomo			
LEGACY I 2.2 16V GX	93 / 98	**PD/423**	Sumitomo			
LEGACY I 2.2 16V GXI	93 / 98	**PD/423**	Sumitomo			
LEGACY I 2.2 16V TOURING	93 / 98	**PD/423**	Sumitomo			
LEGACY II 1.6 16V DL	92 / 98	**PD/423**	Sumitomo			
LEGACY II 1.6 16V GL	92 / 98	**PD/423**	Sumitomo			
LEGACY II 1.8 16V GL	92 / 98	**PD/423**	Sumitomo			
LEGACY II 1.8 16V GLI	92 / 98	**PD/423**	Sumitomo			
LEGACY II 1.8 16V TOURING	92 / 98	**PD/423**	Sumitomo			
LEGACY II 2.0 16V DL	93 / 98	**PD/423**	Sumitomo			

MODEL / *MODELO*	YEAR - *AÑO*	FRONT *DELANTERA*	SYSTEM *SISTEMA*	REAR *TRASERA*	SYSTEM *SISTEMA*	OBS.
SUBARU						
LEGACY II 2.0 16V GL	93 / 98	**PD/423**	Sumitomo			
LEGACY II 2.0 16V GLI	93 / 98	**PD/423**	Sumitomo			
LEGACY II 2.0 16V TOURING	93 / 98	**PD/423**	Sumitomo			
OUTBACK	/ 01	**PD/613**	Akebono			Aro 15"
OUTBACK	05 / 09	**PD/749**		**PD/813**		
OUTBACK 2.5 I	10	**PD/749**		**PD/813**		
SVX	92 / 97			**PD/778**		
TRIBECA H6 3.6L	06 / 09	**PD/1067**		**PD/1076**		
SUNWIN BUS						
		F/803		**F/804**		
SUZUKI						
AERIO	02 / 05	**PD/636**				
AERIO 2WD / 4WD	06	**PD/636**				
APV (GD) 16V	06-05 /	**PD/1384**				
BALENO 1.3	95 / 02	**PD/611**	Sumitomo			
BALENO 1.3i 16V	95 / 02	**PD/611**	Sumitomo			
BALENO 1.6i 16V	95 / 02	**PD/611**	Sumitomo			
BALENO 1.6i 16V 4x4	95 / 02	**PD/611**	Sumitomo			
BALENO 1.8i GT	95 / 02	**PD/611**	Sumitomo			
BALENO 1.9 TD	95 / 02	**PD/611**	Sumitomo			
EQUATOR	12 /	**PD/1390**				
ESTEEM	95 / 02	**PD/611**	Sumitomo			
FUN 1.0	03 /	**PD/42**	Teves	**FD/61-S/F**		
GRAND NOMADE	97 /	**PD/432**	Akebono			
GRAND VITARA	06 / 08	**PD/1077**				
GRAND VITARA 1.6	06 /	**PD/1077**	Tokico			
GRAND VITARA 1.6 / 2.0 / TD / 2.5 V6 24V	98 /	**PD/432**	Akebono			
GRAND VITARA 1.6i	98 /	**PD/419**	Akebono			
GRAND VITARA 1.9	06 /	**PD/1077**	Tokico			
GRAND VITARA 2.0	06 /	**PD/1077**	Tokico			
GRAND VITARA 2.0 TD	98 / 06	**PD/432**	Sumitomo			
GRAND VITARA 2.0i	98 / 06	**PD/419**	Akebono			
GRAND VITARA 2.0i	98 / 06	**PD/432**	Sumitomo			
GRAND VITARA 2.5i V6	98 / 06	**PD/432**	Sumitomo			
JIMMY 1.3	09-98 /	**PD/441**	Sumitomo			
MARUTI ALTO 1.0 EL	94 /	**PD/379**	Sumitomo			
MARUTI ALTO 0.6	93 / 99	**PD/421**	Sumitomo			
NOMADE	97 /	**PD/432**	Akebono			
SAMURAI	92 /	**PD/415**	Lockheed			
SAMURAI 1.0 4x4	88 /	**PD/441**	Sumitomo			
SAMURAI 1.3 4x4	88 /	**PD/441**	Sumitomo			
SIDEKICK	90 / 96	**PD/378**	Akebono			2 Puertas
SIDEKICK	95 /	**PD/432**	Akebono			4 Puertas
SIDEKICK 1.6i	90 / 94	**PD/419**	Akebono			4 Puertas
SIDEKICK 1.6i	93 /	**PD/432**	Sumitomo			
SIDEKICK 1.6i	93 /	**PD/419**	Akebono			
SIDEKICK 1.6i 16V	93 /	**PD/432**	Sumitomo			
SIDEKICK 1.6i 16V	93 /	**PD/419**	Akebono			
SJ 410 1.0 4x4	87 /	**PD/441**	Sumitomo			
SJ 413 1.3 4x4	87 /	**PD/441**	Sumitomo			
SUPER CARRY 1.0	85 / 99	**PD/441**	Sumitomo			
SWIFT 1.0	90 /	**PD/380**	Akebono			

MODEL / *MODELO*	YEAR - *AÑO*	FRONT *DELANTERA*	SYSTEM *SISTEMA*	REAR *TRASERA*	SYSTEM *SISTEMA*	OBS.
SUZUKI						
SWIFT 1.0 GA / GL	92 / 96	**PD/447**	Akebono			
SWIFT 1.0 GA/ GL	89 / 95	**PD/379**	Sumitomo			
SWIFT 1.3 / 1.3i GL / GLX / GS	89 / 95	**PD/447**	Akebono			
SWIFT 1.3 16 V GTi	90 /	**PD/380**	Akebono	**PD/401**	Akebono	
SWIFT 1.3i 16V GTI	86 /	**PD/379**	Sumitomo			
SWIFT 1.5L	07 / 09	**PD/379**				
SWIFT 1.6	90 / 93	**PD/379**	Sumitomo			
SWIFT 1.6 GLX	90 /	**PD/380**	Akebono			
SWIFT 1.6 i 16V GLX	89 / 96	**PD/379**	Sumitomo			
SWIFT III 1.3 / 1.5 / 1.6	02-05 /			**PD/1373**		
VITARA	06 /	**PD/1077**	Tokico			
VITARA 1.6	91 / 95	**PD/419**	Akebono			4 Puertas
VITARA 1.6 / 1.6 16V	91 / 96	**PD/378**	Akebono			2 Puertas
VITARA 1.6 16V	90 / 99	**PD/419**	Akebono			
VITARA 1.6 / 1.9	95 / 99	**PD/432**	Akebono			
VITARA 1.6i 16V	88 / 95	**PD/378**	Akebono			
VITARA 1.6i 16V	90 /	**PD/432**	Sumitomo			
VITARA 1.6i JLX	88 / 95	**PD/419**	Akebono			
VITARA 1.9 D	95 / 99	**PD/419**	Akebono			
VITARA 1.9 D	97 /	**PD/419**	Akebono			
VITARA 1.9 TD	97 /	**PD/419**	Akebono			
VITARA 2.0 / TDI	95 / 98	**PD/432**	Akebono			
VITARA 2.0 16V	96 / 99	**PD/432**	Akebono			
VITARA 2.0 TD	95 /	**PD/432**	Sumitomo			
VITARA 2.0 TD / 16V	96 / 99	**PD/419**	Akebono			
VITARA 2.0 TD / V6	94 / 98	**PD/432**	Akebono			
VITARA 2.0 TDI	95 / 98	**PD/419**	Akebono			
VITARA 2.0i 16V	88 / 95	**PD/378**	Akebono			
VITARA 2.0i 16V	90 /	**PD/432**	Sumitomo			
VITARA 2.0i V6	95 /	**PD/432**	Sumitomo			
VITARA 2.0i/ V6 24V	94 / 98	**PD/419**	Akebono			
XL7	02 /	**PD/432**				
XL7	04 / 06	**PD/812**				
XL7	07 / 09	**PD/711**		**PD/715**		
TATA						
1210 D Series	/ 78	**MB/48/2**		**MB/48/2**		
713/32	90 /	**MB/48/2**				
1313 / 1510 / 1511		**F/1123**		**F/1124**		
TEREX						
33-03B		**4375**		**4354-A**		
PÁ CARREGADEIRA 72-52 B		**PD/29**		**PD/29**		
R-22		**4375**		**4354-A**		
R-35B		**4622**		**4622**		
R-35C		**4622**		**4622**		
SCRAPER TS-14B				**4354-A**		
TRATOR S-14				**4354-A**		
TRATOR S-24				**4575**		
TEVES						
MB - VOLKSWAGEN				**PD/341-A**	Teves	
MB - VOLKSWAGEN				**PD/417-A**	Teves	
MB - VOLKSWAGEN				**PD/659-A**	Teves	

MODEL / *MODELO*	YEAR - *AÑO*	FRONT *DELANTERA*	SYSTEM *SISTEMA*	REAR *TRASERA*	SYSTEM *SISTEMA*	OBS.
TOYOTA						
4 RUNNER 4.0L / 4.7L	90 / 91	**PD/115**				
4 RUNNER RIN 16"	96 / 02	**PD/115**				
4 RUNNER RIN 17"	03 / 09	**PD/528**		**PD/695**		
4RUNNER	01 / 03	**PD/773**				
AVALON	95 / 96	**PD/686**				
AVALON	95 / 99			**PD/703**		
AVALON	98 / 05	**PD/707**				
AVANZA 1.3	09-02 /	**PD/1384**				
AVANZA 1.5	08-06 /	**PD/1384**				
CAMRY	91 / 01	**PD/387**	Akebono	**TY/320-CP**		
CAMRY	02 / 06	**PD/745**				
CAMRY	90 /	**PD/427**	Akebono			
CAMRY	90 /	**PD/426**	Sumitomo			
CAMRY	88 / 00			**PD/682**		
CAMRY	91	**PD/686**				
CAMRY	97 / 00	**PD/707**				
CAMRY	83 / 86	**PD/680**	Akebono			
CAMRY	06 /			**PD/753**		
CAMRY	12 /	**PD/1288**		**PD/1289**		
CAMRY HYBRID	06 /			**PD/753**		
CAMRY 3.5 V6	07 /	**PD/1078**	Akebono			
CAMRY 2.4L / 3.5 L	08 / 10	**PD/1078**		**PD/753**		
CAMRY 6 cil.	01	**PD/707**				
CAMRY AJ	02 / 05	**PD/745**		**PD/739**		
CAMRY AJ / SE / XLE	02 / 04	**PD/745**		**PD/739**		
CAMRY AJ / SE / XLE	05 / 06	**PD/743**		**PD/739**		
CAMRY ARMADO EN USA	02 / 05	**PD/745**		**PD/730**		
CAMRY ARMADO EN USA / SE / XLE	05 / 06	**PD/743**		**PD/730**		
CAMRY ARMADO EN USA / SE / XLE 3.0L	02 / 04	**PD/745**		**PD/730**		
CAMRY XLE	90 /	**PD/387**	Akebono	**TY/320-CP**		
CARINA	90 /	**PD/387**	Akebono			
CARINA	90 /	**PD/427**	Akebono			
CARINA	90 /	**PD/426**	Sumitomo			
CELICA	/ 97	**PD/387**	Akebono			
CELICA	/ 97	**PD/427**	Akebono			
CELICA	/ 97	**PD/426**	Sumitomo			
CELICA	01 / 05	**PD/788**				
CELICA	86 / 89	**PD/680**	Akebono			
CELICA	94 / 97	**PD/387**				
CELICA 4WD	88 / 90			**PD/682**		
CELICA Convertible	87 / 88	**PD/680**	Akebono			
CELICA GT	94 / 95	**PD/686**				
CELICA GT	91 / 96			**PD/682**		
CELICA GTS	00	**PD/788**				
CELICA GTS	86 / 92			**PD/682**		
CELICA GTS (ABS)	88 / 89			**PD/682**		
CELICA GTS All Trac / SPORT	93			**PD/682**		
CELICA ST	90 / 91	**PD/680**	Akebono			
CELICA Trac TURBO	91 / 92			**PD/682**		
CELICA TURBO	89			**PD/682**		
COASTER BB10	77 / 81	**TY/18**		**TY/19**		
COASTER Minibus	97 /	**PD/366**	Sumitomo			
COROLLA	13 /	**PD/740**	Akebono			
COASTER RB11	77 / 81	**TY/18**		**TY/19**		

MODEL / *MODELO*	YEAR - *AÑO*	FRONT *DELANTERA*	SYSTEM *SISTEMA*	REAR *TRASERA*	SYSTEM *SISTEMA*	OBS.
TOYOTA						
COROLLA	90 /	**PD/387**	Akebono			
COROLLA	90 /	**PD/427**	Akebono			
COROLLA	90 /	**PD/426**	Sumitomo			
COROLLA	98 / 02	**PD/712**				
COROLLA	00 / 02	**PD/680**	Akebono	**TY/325-CP**		Freio traseiro Ø200,0x35,0mm
COROLLA	90	**PD/680**	Akebono			
COROLLA (Todos)	02 /	**PD/680**	Akebono	**TY/328-CPA**		
COROLLA 2.0 XEi 16V AUTOMÁTICO	11 /	**PD/669**	Bosch	**PD/689**	Bosch	
COROLLA ALTIS 2.0 16V AUTOMÁTICO	11 /	**PD/669**	Bosch	**PD/689**	Bosch	
COROLLA ALTIS 2.0 16V	15 /	**PD/1480**		**PD/689**	Bosch	
COROLLA DLX	85	**PD/680**	Akebono			
COROLLA DLX	87 / 89	**PD/680**	Akebono			
COROLLA DLX	91 / 92	**PD/680**	Akebono			
COROLLA DLX All Trac	88 / 90	**PD/680**	Akebono			
COROLLA DX	92 / 05-02	**PD/387**	Akebono	**TY/320-CP**		
COROLLA FIELDER XEI 1.8	04 / 05-08	**PD/491**	TRW	**PD/512**	TRW	
COROLLA FX / FX16	87 / 88	**PD/680**	Akebono			
COROLLA FX16 GTS	88	**PD/680**	Akebono			
COROLLA GLI 1.8 16V	06-08 /	**PD/669**	Bosch	**PD/689**	Bosch	
COROLLA GLI 1.8 16V	15 /	**PD/1480**		**PD/689**	Bosch	
COROLLA GTS	88 / 92	**PD/680**	Akebono			
COROLLA LE	92 / 05-02	**PD/387**	Akebono	**TY/320-CP**		
COROLLA LE	84 / 92	**PD/680**				
COROLLA LE	93 / 97	**PD/387**				
COROLLA LE	06 / 08	**PD/669**		**PD/689**		
COROLLA LE	06 / 08	**PD/740**				
COROLLA LE 1.8L	03 / 08	**PD/748**				
COROLLA Sedan / Liftback	84	**PD/680**	Akebono			
COROLLA SE-G 1.8 16V	06-02 / 05-08	**PD/491**	TRW	**PD/512**	TRW	
COROLLA SE-G 1.8 16V	06-08 /	**PD/669**	Bosch	**PD/689**	Bosch	
COROLLA Sport GTS	87	**PD/680**	Akebono			
COROLLA SR5	91	**PD/680**	Akebono			
COROLLA Sta. Wagon 2WD	88 / 91	**PD/680**	Akebono			
COROLLA Sta. Wagon 4WD	89 / 93	**PD/680**	Akebono			
COROLLA XEI 1.8 16V	06-02 / 05-08	**PD/491**	TRW	**PD/512**	TRW	
COROLLA XEI 1.8 16V	06-08 /	**PD/669**	Bosch	**PD/689**	Bosch	
COROLLA XEI 2.0	06-02 / 05-08	**PD/491**	TRW	**PD/512**	TRW	
COROLLA XEI 2.0 16V	15 /	**PD/1480**		**PD/689**	Bosch	
COROLLA XLE	06 / 09	**PD/491**		**PD/512**		
COROLLA XLI 1.6 16V	06-02 / 05-08	**PD/491**	TRW	**PD/512**	TRW	
COROLLA XLI 1.8 16V	06-08 /	**PD/669**	Bosch	**PD/689**	Bosch	
COROLLA XRS	12 /			**PD/1320**		
CORONA	92 / 94	**PD/387**	Akebono			
CORONA	92 / 94	**PD/427**	Akebono			
CORONA 2.0	92 /	**PD/387**	Akebono			
CRESSIDA	89 / 92	**PD/607**				
CRESSIDA	81 / 88	**PD/680**				
CRESSIDA Station Wagon	89 / 90	**PD/607**				
DYNA		**F/1139**		**F/1139**		
DYNA 2 1/2 ton	70 / 77	**TY/18**		**TY/19**		
DYNA 2 ton	70 / 77	**TY/18**		**TY/19**		
DYNA 6-094	97 /	**F/755**		**F/756**		
DYNA 6-104	97 /	**F/755**		**F/756**		
DYNA 7-094	97 /	**F/755**		**F/756**		

MODEL / *MODELO*	YEAR - *AÑO*	FRONT *DELANTERA*	SYSTEM *SISTEMA*	REAR *TRASERA*	SYSTEM *SISTEMA*	OBS.
TOYOTA						
DYNA 7-095	97 /	**F/755**		**F/756**		
DYNA 7-104	97 /	**F/755**		**F/756**		
DYNA 7-105	97 /	**F/755**		**F/756**		
DYNA 7-124	01 /	**F/755**		**F/756**		
DYNA 7-125	01 /	**F/755**		**F/756**		
DYNA 7-145TD	99 /	**F/755**		**F/756**		
DYNA Bus HU 18	70 / 77	**TY/18**		**TY/19**		
DYNA Bus RU 18	70 / 77	**TY/18**		**TY/19**		
DYNA RU 20	77 / 81	**TY/18**		**TY/19**		
DYNA RU 30	77 / 81	**TY/18**		**TY/19**		
ECHO	00 / 01	**PD/496**				
ETIOS X 1.3L 16V	12 /	**PD/1438**				
ETIOS XS 1.5L 16V	12 /	**PD/1438**				
ETIOS XLS 1.5L 16V	12 /	**PD/1438**				
ETIOS SEDAN X 1.5L 16V	12 /	**PD/1438**				
ETIOS SEDAN XS 1.5L 16V	12 /	**PD/1438**				
ETIOS SEDAN XLS 1.5L 16V	12 /	**PD/1438**				
ETIOS CROSS 1.5 XLS	13 /	**PD/1438**				
FJ CRUSIER 4.0L	07 / 09	**PD/528**				
HIACE 1.8	83 / 84	**PD/429**	Akebono			
HIACE 2.0	83 / 84	**PD/429**	Akebono			
HIACE 2.2 D	83 / 84	**PD/429**	Akebono			
HIACE IV 2.4 D	07 /	**PD/1358**	Akebono			
HIACE 2.4 D	83 / 87	**PD/429**	Akebono			
HIGHLANDER	01 / 03	**PD/790**		**PD/739**		
HIGHLANDER	04 / 06	**PD/790**		**PD/762**		
HIGHLANDER Hybrid	06 / 07	**PD/764**				
HILUX 2.7L	04 / 07	**PD/115**				
HILUX 1 Ton. 4x2 STD/ DLX 2.8	00 /	**PD/114**	Varga			
HILUX 1 Ton. 4x4	99 /	**PD/115**	Varga			
HILUX 1.8 4x2	83 / 94	**PD/429**	Akebono			
HILUX 2.5L 16V	08 /	**PD/1098**	ADVICS	**TY/327-CP**		
HILUX 3.2 CD 4x2 SRV	05 /	**PD/528**	Sumitomo	**TY/327-CP**		Freio traseiro Ø279,0x60,0mm
HILUX 4 RUNNER	92 /	**PD/115**	Varga			
HILUX 4WD	93 /			**TY/326-CP**		Freio traseiro Ø295,0x50,0mm
HILUX 4x2	00 /	**PD/114**	Varga			
HILUX 4x2	05 / 03-09	**PD/527**	TRW			
HILUX 4x4	90 /	**PD/115**	Sumitomo			
HILUX 4x4	94 /	**PD/429**	Akebono			
HILUX 4x4	05 / 03-09	**PD/527**	TRW			
HILUX 4x4 - HI-ACE	90 / 94	**PD/429**	Akebono			
HILUX SW4	05 /	**PD/528**	Sumitomo			
HILUX SW4	96 /	**PD/115**	Varga			
HILUX SW4 SRV	05 /			**TY/327-CP**		Freio traseiro Ø279,0x60,0mm
HILUX T100 1/2 Ton. 4x2 / 4x4	92 /	**PD/115**	Varga			
JEEP	67 / 92	**TY/252**		**TY/252**		Est. TY/253
JEEP	93 / 96	**TY/254**		**TY/252**		
JEEP	96 /	**PD/107**	Varga	**TY/252**		
JEEP- PICK-UP	93 / 96	**TY/254**		**TY/252**		
JU 10	70 / 77	**TY/18**		**TY/19**		
JU 12	70 / 77	**TY/18**		**TY/19**		
JU 15	70 / 77	**TY/18**		**TY/19**		
LAND CRUISER	93 /	**PD/115**	Varga			
LAND CRUISER PRADO	03 /	**PD/528**	Sumitomo	**PD/695**	Sumitomo	

MODEL / *MODELO*	YEAR - *AÑO*	FRONT *DELANTERA*	SYSTEM *SISTEMA*	REAR *TRASERA*	SYSTEM *SISTEMA*	OBS.
TOYOTA						
LANDCRUISER	08 / 10	**PD/1084**		**PD/1085**		
LANDCRUISER 4.7L	04 / 07			**PD/819**		
LEXUS	95 /	**PD/426**	Sumitomo			
MATRIX	03 / 08	**PD/748**				
MATRIX 2.4L	09 / 10	**PD/744**				
MR2	87 / 95	**PD/680**	Akebono			
MR-2 1.8L	05 / 06	**PD/789**				
MR-2 SPYDER	05 / 06	**PD/789**				
PASEO	92 / 99	**PD/680**	Akebono			
PERUA	67 / 92	**TY/252**		**TY/252**		Est. TY/253
PERUA	93 / 96	**TY/254**		**TY/252**		
PERUA	96 /	**PD/107**	Varga	**TY/252**		
PICK UP 2WD CAJA CORTA	84 / 95	**PD/1031**				
PICK UP 2WD V6	85 / 95	**PD/429**				
PICK UP 4WD	89 / 95	**PD/115**				
PICK-UP	67 / 92	**TY/252**		**TY/252**		Est. TY/253
PICK-UP	93 / 96	**TY/254**		**TY/252**		
PICK-UP	96 /	**PD/107**	Varga	**TY/252**		
Pickup 1/2Ton,4x2w/LongBed	89 / 91	**PD/607**				
PREVIA	90 / 97			**PD/1035**		
PREVIA 2.4i	97 / 00	**PD/612**	Akebono			
PREVIA 2.4i 4WD	97 / 00	**PD/612**	Akebono			
PRIUS V	12 / 13	**PD/740**	Akebono			
RAV-4	93 /	**PD/387**	Akebono			
RAV-4	93 /	**PD/427**	Akebono			
RAV-4	01 / 04	**PD/628**	Sumitomo			
RAV-4	04 / 05	**PD/628**	Sumitomo	**PD/629**	Sumitomo	
RAV-4	98 / 02	**PD/387**	Akebono			
RAV-4 2.0 / 2.4	06 / 13	**PD/740**	Akebono			
RAV-4 2.0i 16V	06 /	**PD/744**	Akebono	**PD/753**		
RAV-4 2.4L	06 /	**PD/744**	Akebono	**PD/753**		
RAV-4 2.4L 3RD SEAT	06 /	**PD/744**	Akebono	**PD/753**		
RAV-4 2.5 4x4	14 /	**PD/744**	Akebono	**PD/753**		
RAV-4 3.5L	06 /	**PD/744**	Akebono	**PD/753**		
RU 10	70 / 77	**TY/18**		**TY/18**		
RU 12	70 / 77	**TY/18**		**TY/19**		
RU 15	70 / 77	**TY/18**		**TY/19**		
SEQUOIA	01 / 03	**PD/724**				
SEQUOIA 4.7L	08 / 10	**PD/1084**		**PD/1085**		
SIENNA 3.3L	04 / 09	**PD/743**		**PD/793**		
SOLARA	99 / 00			**PD/682**		
SOLARA	99 / 03	**PD/707**				
SOLARA 3.3L	05 / 06	**PD/743**		**PD/730**		
SUPRA	95 / 98	**PD/784**				
SUPRA	93 / 94	**PD/784**				
TACOMA	04	**PD/773**				
TACOMA 2WD / 4WD	03	**PD/773**				
TACOMA 4WD	95 / 98	**PD/773**				
TACOMA 4X2	06 / 09	**PD/528**				
TACOMA 4X4 4.0L	06 / 07	**PD/528**				
TERCEL	86 / 99	**PD/680**	Akebono			
TERCEL	83 / 94	**PD/680**				
TERCEL Station Wagon / Station Wagon 4WD	86 / 88	**PD/680**	Akebono			
TUNDRA	99 / 03	**PD/724**				

MODEL / *MODELO*	YEAR - *AÑO*	FRONT *DELANTERA*	SYSTEM *SISTEMA*	REAR *TRASERA*	SYSTEM *SISTEMA*	OBS.
TOYOTA						
TUNDRA 4.0L / 4.7L	07 / 10	**PD/1084**		**PD/1085**		
YARIS	04 / 05	**PD/496**				
YARIS	06 / 09	**PD/621**				
YARIS 1.3	11-99 /	**PD/1385**				
YARIS 1.5	03-00 /	**PD/1385**				
YARIS SE	12 /	**PD/1423**				
VITZ 1.0 16V	04-99 /	**PD/1385**				
VITZ 1.3 16V	11-99 /	**PD/1385**				
VITZ 1.5 VV-I TS	04-01 /	**PD/1385**				
TRAILOR						
300 x 150,0 mm				**19517/518 00**		
419 x 177,8 mm				**19036/037 00**		
419 x 178,0 mm				**19613/614 00**		SMB C 2 axle
419 x 203,0 mm				**19557/606 00**		SMB C 1 axle
419 x 203,2 mm				**19365/366 00**		
419 x 219,1 mm				**19369/370 00**		ROR Axle
TROLLER						
T4 TDi	00 / 01	**PD/418**	K. Hayes	**PD/50**	Varga	
T4 TDi	01 /	**PD/72**	Teves	**PD/50**	Varga	
T4 TDi	03 /	**PD/72**	Teves	**PD/76**	Varga	
T4 TDi	01 /	**PD/676**	Teves	**PD/50**	Varga	
T4 TDi	03 /	**PD/676**	Teves	**PD/76**	Varga	
T4 3.2 20V 4x4	15 /	**PD/1434**				
VAG						
TRANSPOTER T4 (EUROVAN) RIN 14"	92 / 01	**PD/1379**				
VALMET						
30 D	73 /			**TR/313**		
62-ID	73 /			**TR/313**		
360 D	73 /			**TR/313**		
600 D	73 /			**TR/313**		
VAN HOOL						
300 / 308		**17481 00**				
A 300 URBAIN		**PD/175**	Knorr			
A 300 URBAIN		**PD/176**	Knorr			
A 308 / A 508	80 /	**19384/385 00**		**19384/385 00**		
A 420 / 440 / 500 URBAIN		**PD/175**	Knorr			
A 420 / 440 / 500 URBAIN		**PD/176**	Knorr			
A 662		**17481 00**		**17481 00**		
ACRON / ALTANO		**19896 00**		**19896 00**		
EOS Models 80 - 223				**19847/848 00**		
G 280.2 URBAIN		**19494 00**				19494 00 2nd rear axle
G 280.3 URBAIN		**19494 00**				19494 00 2nd rear axle
G 280.4 URBAIN		**19494 00**				19494 00 2nd rear axle
LOW FLOOR BUSES	94 /	**PD/125**	Meritor	**PD/125**	Meritor	
T 809 ALIZEE		**19896 00**		**19896 00**		
T 811 / T 812 / T 813 / T 814 / T 815	80 /	**19384/385 00**		**19896 00**		
T 811 / T 812 / T 813 / T 814 / T 815	80 /	**19495 00**		**19896 00**		
TRAILERS 420 x 200,0 mm BRAKES				**19094 00**		BPW Axles
VIBERTI						
420 x 200,0 mm				**19094 00**		

MODEL / *MODELO*	YEAR - *AÑO*	FRONT *DELANTERA*	SYSTEM *SISTEMA*	REAR *TRASERA*	SYSTEM *SISTEMA*	OBS.
VOLKSWAGEN						
1500	81 / 91	**PD/317**	Tensa	**FD/70**		
1500 1.8	81 / 92	**PD/307**	Teves	**FD/70**		
AMAROK HIGHLINE CD 2.0 16V	10 /	**PD/1028**	Bosch			
AMAROK TRENDLINE CD 2.0 16V	10 /	**PD/1028**	Bosch			
APOLLO	90 / 92	**PD/24** **PD/24-A** **PD/24-B**	Teves	**FD/64-S/F** **FD/64-CPA**	Varga	
ATLANTIC 1.7L	80 / 85	**PD/17**				
ATLANTIC 1.8L	86 / 87	**PD/328**				
BEETLE	07 /	**PD/1000-B**	Teves	**PD/1030**	Lucas	
BEETLE	12 /			**PD/1465**		
BEETLE 2.0L	98 / 09	**PD/58-B**		**PD/59**		
BEETLE 1.8 T	98 /	**PD/340-B**	Teves	**PD/362**	Girling	
BEETLE 1.8 T	98 /	**PD/384**	Teves	**PD/362**	Girling	
BEETLE 2.3 V5	98 /	**PD/340-B**	Teves	**PD/362**	Girling	
BEETLE 2.3 V5	98 /	**PD/384**	Teves	**PD/362**	Girling	
BEETLE CABRIO 2.0L	03 / 09	**PD/340-B**		**PD/59**		
BEETLE RSI 3.2	98 /	**PD/340-B**	Teves	**PD/362**	Girling	
BEETLE RSI 3.2	98 /	**PD/384**	Teves	**PD/362**	Girling	
BEETLE SPORT	07 / 09	**PD/1000-B**		**PD/1030**		
BEETLE SPORT GLX 2.5L	07 / 09	**PD/340-B**		**PD/59**		
BEETLE TURBO 1.8L T	98 / 09	**PD/340-B**		**PD/59**		
BLACK UP	14 /	**PD/58**				
BORA 1.8 T	00 /	**PD/340-B**	Teves	**PD/362**	Girling	
BORA 1.8 T	00 /	**PD/384**	Teves	**PD/362**	Girling	
BORA 2.0	00 /	**PD/58** **PD/58-B**	Teves	**PD/362**	Girling	
BORA 2.3 V5	99 /	**PD/340-B**	Teves	**PD/362**	Girling	
BORA 2.3 V5	99 /	**PD/384**	Teves	**PD/362**	Girling	
BORA 2.5L	05 / 09	**PD/1000-B**		**PD/1030**		
BORA 2.8 V6	99 /	**PD/340-B**	Teves	**PD/362**	Girling	
BORA 2.8 V6	99 /	**PD/384**	Teves	**PD/362**	Girling	
BORA A4GP AUT. 2.0L	07 /	**PD/1000-B**	Teves	**PD/1030**	Teves	
BORA A4GP MAN. 2.0L	07 /	**PD/1000-B**	Teves	**PD/1030**	Teves	
BORA BASICO 2.0	07 /	**PD/1000-B**	Teves	**PD/1030**	Teves	
BORA CONFORT 2.0	07 /	**PD/1000-B**	Teves	**PD/1030**	Teves	
BORA TOTAL FLEX 2.0L	07 /	**PD/1000-B**	Teves	**PD/1030**	Teves	
BRASÍLIA	73 / 82	**PD/5**	Teves	**VW/272**	VW	
BRASILIA 1.6L	74 / 82	**PD/5**				
CABRIO A3	96 / 02	**PD/413** **PD/337**				
CADDY	97 /	**PD/413**	Girling	**VW/278**	VW	Freno tras. Ø230X30
CADDY	97 /	**PD/413**	Girling	**VW/277**	VW	Discos delant. Ventilados - Freno tras. Ø230X40
CADDY	99 /	**PD/443**	Girling	**VW/278**	VW	Discos delant. Sólidos - Freno tras. Ø230X30
CARAT	81 / 92	**PD/23**	Teves	**VW/274**	VW	
CARAVELLE 2.4 / 2.5 GL	96 /	**PD/487**	Girling			
CARIBE 1.5L / 1.6L / 1.7L	77 / 86	**PD/17**				
CARIBE 1.8L	83 / 86	**PD/328**				
CORSAR	86 / 88	**PD/495**				
CORSAR 1.8L	86 / 88	**PD/328**				
CRAFTER 3.8 TON	08 / 10	**PD/662**		**PD/663**		
CRAFTER 5.0 TON	08 / 10	**PD/661**		**PD/664**		
CROSS FOX 1.6	06 /	**PD/367**	Bosch			
CROSS FOX ARO 15"	06 /	**PD/73**	Teves	**VW/276**	VW	

MODEL / *MODELO*	YEAR - *AÑO*	FRONT *DELANTERA*	SYSTEM *SISTEMA*	REAR *TRASERA*	SYSTEM *SISTEMA*	OBS.
VOLKSWAGEN						
CROSSFOX 1.6L	07 / 09	**PD/73**				
CROSSFOX 1.6	05 /	**PD/73**	Teves	**VW/276**	VW	
CROWN VICTORIA	96 /					Freio de mão **FP/99-CP**
D-1400	83 / 85	**FD/80**	Varga Master	**FI/117 FI/119**	Varga Master	
DERBY	97 / 00	**PD/367**				
DERBY	97 / 00	**PD/368**				
DERBY	01 / 07	**PD/413 PD/337**				
DERBY	01 / 07	**PD/329**				
DERBY 1.8L	95 / 96	**PD/328**				
DERBY 1.8L / 2.0L	01 / 09	**PD/73**				
EOS	07 / 09	**PD/1000-B**	Teves	**PD/1030**	Lucas	
EOS 1.6 FSi	03-06 /	**PD/1000-B**	Teves	**PD/1030**	Lucas	
EOS 2.0 FSi	03-06 /	**PD/1000-B**	Teves	**PD/1030**	Lucas	
EOS 2.0 TDi	03-06 /	**PD/1000-B**	Teves	**PD/1030**	Lucas	
EOS 3.6 FSi	03-06 /	**PD/1000-B**	Teves	**PD/1030**	Lucas	
EOS TURBO 2.0L T	10 /	**PD/1000-B**		**PD/1030**		
ESCARABAJO	83 /	**PD/5**	Teves			
EUROVAN	05 / 06			**PD/592-B**		
EUROVAN	03 / 05	**PD/406 PD/406-B**				
EUROVAN 2.5L	00 / 02	**PD/406**				
EUROVAN 2.4	93 /	**PD/487**	Girling			
EUROVAN TDI 1.9L	06 / 09			**PD/592-B**		
FOX 1.0	03 /	**PD/367**	Bosch	**VW/276 VW/276-CPA**	VW	Aro 13”
FOX 1.0	02 /	**PD/58**	Teves	**VW/276 VW/276-CPA**	VW	Aro 14”
FOX 1.0	02 /	**PD/58**	Teves	**VW/276 VW/276-CPA**	VW	Aro 15”
FOX 1.0	03 /	**PD/368**	Teves	**VW/276**	VW	Rin 13” - disco ventilado
FOX 1.0	03 /	**PD/367**	Bosch	**VW/276**	VW	Aro 13” - disco sólido
FOX 1.0	03 /	**PD/73**	Teves	**VW/276**	VW	Aro 14”
FOX 1.6	02 /	**PD/58**	Teves	**VW/276 VW/276-CPA**	VW	Aro 14”
FOX 1.6	02 /	**PD/58**	Teves	**VW/276 VW/276-CPA**	VW	Aro 15”
FOX 1.6	03 /	**PD/73**	Teves	**VW/276**	VW	
FOX BLUEMOTIN 1.0 12V	06-14 /	**PD/58**				
FOX COMFORTLINE 1.0 8V / 1.6 8V	06-14 /	**PD/58**				
FOX HIGHLINE 1.6 16V	06-14 /	**PD/58**				
FOX TRENDLINE 1.0 8V / 1.6 8V	06-14 /	**PD/58**				
FURGÃO 1500	67 / 75	**VW/270**	VW	**VW/271**	VW	
FURGÃO 1600	76 / 82	**VW/270**	VW	**VW/271**	VW	
FUSCA 1600	83 / 86	**PD/5**	Teves	**VW/262**	VW	
FUSCA 1600	93 / 96	**PD/5**	Teves	**VW/262**	VW	
GACEL	81 / 92	**PD/23**	Teves	**VW/274**	VW	
GOL	09 / 10	**PD/367**				
GOL 1.0	94 / 95	**PD/43**	Teves	**VW/274**	VW	
GOL 1.0	95 / 06-00	**PD/23**	Teves	**VW/274**	VW	
GOL 1.0	07-00 / 06-09	**PD/51 PD/54**	Teves Varga	**VW/276**	VW	
GOL 1.0	07-09 /	**PD/81 PD/54**	Teves Varga	**VW/276**	VW	
GOL 1.0	08 /	**PD/367**	Bosch			(Geração V)
GOL 1.0	08 /	**PD/368**	Teves			(Geração V) disco ventilado

MODEL / *MODELO*	YEAR - *AÑO*	FRONT *DELANTERA*	SYSTEM *SISTEMA*	REAR *TRASERA*	SYSTEM *SISTEMA*	OBS.
VOLKSWAGEN						
GOL 1.0	08 / 04-11	**PD/1100**	Teves	**VW/274**		(Geração V) Disco 256x18mm
GOL 1.0 / 1.6	12 /	**PD/1346**	Teves			
GOL 1.0 / 1.6	96 / 06-00	**PD/54**	Varga	**VW/274**	VW	
GOL 1.0 / 1.6 / 1.8	07-00 /	**PD/51**	Teves	**VW/276**	VW	
GOL 1.0 / 1.6 / 1.8	07-00 /	**PD/54**	Varga	**VW/276**	VW	
GOL 1.0 SPECIAL	98 /	**PD/23** **PD/54**	Teves Varga	**VW/274**	VW	
GOL 1.0 TREND	08 / 04-11	**PD/1100**	Teves	**VW/274**		(Geração V) Disco 256x18mm
GOL 1.000	92 / 93	**PD/17**	Teves	**VW/274**	VW	
GOL 1.6	08 / 04-11	**PD/1100**	Teves	**VW/276** **VW/276-CPA**		(Geração V) Disco 256x18mm
GOL 1.6	83 / 93	**PD/17**	Teves	**VW/274**	VW	
GOL 1.6	94 / 95	**PD/43**	Teves	**VW/274**	VW	
GOL 1.6	95 / 06-00	**PD/23**	Teves	**VW/274**	VW	
GOL 1.6	07-00 / 06 -09	**PD/51** **PD/54**	Teves Varga	**VW/276**	VW	
GOL 1.6	07-09 /	**PD/81** **PD/54**	Teves Varga	**VW/276**	VW	
GOL 1.6	08 /	**PD/368**	Teves			(Geração V) disco ventilado
GOL 1.6	08 /	**PD/367**	Bosch			(Geração V)
GOL 1.6 GL	92 / 94	**PD/17**	Teves	**VW/274**	VW	
GOL 1.6 TREND	08 / 04-11	**PD/1100**	Teves			(Geração V) Disco 256x18mm
GOL 1.8	84 / 06-00	**PD/23**	Teves	**VW/274**	VW	
GOL 1.8	96 / 06-00	**PD/54**	Varga	**VW/274**	VW	
GOL 1.8	07-00 / 06 -09	**PD/51** **PD/54**	Teves Varga	**VW/276**	VW	
GOL 1.8	07-09 /	**PD/81** **PD/54**	Teves Varga	**VW/276**	VW	
GOL 1.8	/ 06-00	**PD/23**	Teves	**VW/274**	VW	
GOL 1000	92 / 93	**PD/17**	Teves	**VW/274**	VW	
GOL 1300	80	**PD/16**	Teves	**VW/273**	VW	
GOL 1600	81 / 83	**PD/16**	Teves	**VW/274**	VW	
GOL 2.0	/ 94	**PD/28**	Teves	**VW/276**	VW	
GOL 2.0	88 / 94	**PD/28**	Teves	**VW/276**	VW	
GOL 2.0	95 / 97	**PD/44** **PD/44-B** **PD/45**	Teves Teves Varga	**VW/276**	VW	com ABS
GOL 2.0 GTI	94 /	**PD/45**	Varga	**VW/276**	VW	
GOL 2.0 GTI	94 /	**PD/44**	Teves	**VW/276**	VW	
GOL 2.0 GTI	95 /	**PD/44-B**	Teves	**VW/276**	VW	
GOL GERAÇÃO V	08 /			**VW/281-CPA**	Varga	Freio traseiro Ø 200x40mm
GOL GL 1.6	83 / 94	**PD/16**	Teves	**VW/273**	VW	
GOL GTi 16V	95 /	**PD/44** **PD/44-B** **PD/45**	Teves Teves Varga	**PD/36**	Teves	com ABS
GOL GTi 2.0	94 /	**PD/44** **PD/44-B** **PD/45**	Teves Teves Varga	**VW/276**	VW	
GOLF 1.6	04-02 /	**PD/73** **PD/73-B**	Teves	**PD/362**	Girling	
GOLF 1.6 / 1.8 / 1.9	99 / 03-02	**PD/58** **PD/58-B**	Teves	**PD/362**	Girling	
GOLF 1.6 / 2.0 8V	99 / 03-02	**PD/58** **PD/58-B**	Teves	**PD/362**	Girling	Brasilero
GOLF 1.6 / 2.0 8V	04-02 /	**PD/73** **PD/73-B**	Teves	**PD/362**	Girling	Brasilero
GOLF 1.8 / 2.0 GTi	98 /	**PD/337**	Girling	**PD/362**	Girling	Discos Ventilados
GOLF 1.8 GTi	99 /	**PD/329**	Girling	**PD/362**	Girling	Discos Ventilados
GOLF 1.8 GTi	99 /	**PD/466**	Girling	**PD/362**	Girling	Discos Ventilados
GOLF 1.9 TDi	99 /	**PD/467**	Girling			Discos Sólidos

MODEL / *MODELO*	YEAR - *AÑO*	FRONT *DELANTERA*	SYSTEM *SISTEMA*	REAR *TRASERA*	SYSTEM *SISTEMA*	OBS.
VOLKSWAGEN						
GOLF 1.9 TDL	97 /	**PD/413**	Girling			Discos Ventilados
GOLF 1.9 TDL	97 /	**PD/466**	Girling			Discos Ventilados
GOLF 1.9 TDL	99 /	**PD/443**	Girling			Discos Sólidos
GOLF 2.0 8V	99 / 03-02	**PD/58** **PD/58-B**	Teves	**PD/362**	Girling	
GOLF 2.0 8V	04-02 /	**PD/73** **PD/73-B**	Teves	**PD/362**	Girling	
GOLF A2	87 / 92	**PD/495**				
GOLF A2 1.8L	87 / 92	**PD/328**				
GOLF A2 GTI	88 / 92	**PD/495**				
GOLF A3	95 / 99	**PD/368**				
GOLF A3	97 / 99	**PD/329**		**PD/362**		
GOLF A3	96 / 99	**PD/384**		**PD/362**		
GOLF A3 1.8L	93 / 95	**PD/328**				
GOLF A3 1.8L	95 / 99	**PD/367**				
GOLF A3 2.0L	93 / 99	**PD/413** **PD/337**				
GOLF A3 2.0L	97 / 99	**PD/413** **PD/337**		**PD/362**		
GOLF A3 2.8L	95 /	**PD/443** **PD/602**		**PD/362**		
GOLF A3 GTI	93 / 99	**PD/413** **PD/337**		**PD/362**		
GOLF A4	00 / 07	**PD/58-B**		**PD/59**		
GOLF A4 2.0L	00 / 07	**PD/58**		**PD/59**		
GOLF A4 TURBO 1.8L T	00 / 04	**PD/340-B**		**PD/59**		
GOLF A5	07 / 09	**PD/1000-B**		**PD/1030**		
GOLF COMFORTLINE 1.4 TSI	14 /	**PD/1490-B**		**PD/1491**		
GOLF GTI 2.0 DSG	14 /	**PD/1490-B**		**PD/1491**		
GOLF HIGHLINE 1.4 TSI	14 /	**PD/1490-B**		**PD/1491**		
GOLF GL 1.8	91 / 94	**PD/328**	K. Hayes	**VW/276**	VW	
GOLF GL 1.8	95 /	**PD/329** **PD/367**	Girling Bosch	**VW/276**	VW	
GOLF GL 1.8 / GLX	94 /	**PD/328**	Kelsey Hayes			Discos Sólidos
GOLF GL 1.8 / GLX	95 /	**PD/367**	Girling	**VW/276**		Discos Sólidos
GOLF GL 1.8 / GLX	95 /	**PD/368**	Girling	**VW/276**		Discos Ventilados
GOLF GLX 2.0	94 / 98	**PD/329** **PD/367**	Girling Bosch	**VW/276**	VW	
GOLF GTi	07 /	**PD/1000-B**	Teves	**PD/1030**	Lucas	
GOLF GTi 2.0	94 / 98	**PD/329** **PD/367**	Girling Bosch	**PD/362**	Girling	
GOLF GTI 1.8 TURBO	98 /	**PD/384-A**	Teves	**PD/362**	Girling	
GOLF GTi 2.0	94 / 95	**PD/329**	Girling	**PD/362**	Girling	Discos Ventilados
GOLF GTi 2.0	94 / 95	**PD/466**	Girling	**PD/362**	Girling	Discos Ventilados
GOLF GTi 2.0	94 / 95	**PD/336**	Girling	**PD/362**	Girling	Discos Sólidos
GOLF GTi 2.0	94 / 95	**PD/467**	Girling	**PD/362**	Girling	Discos Sólidos
GOLF GTi 2.0 16V	94 /	**PD/329**	Girling	**PD/362**	Girling	Discos Ventilados
GOLF GTi 2.0 16V	94 /	**PD/466**	Girling	**PD/362**	Girling	Discos Ventilados
GOLF GTi 2.0 16V	94 /	**PD/336**	Girling	**PD/362**	Girling	Discos Sólidos
GOLF GTi 2.0 16V	94 /	**PD/467**	Girling	**PD/362**	Girling	Discos Sólidos
GOLF GTI 2.0 DSG	14 /	**PD/1490-B**		**PD/1491**		
GOLF HIGHLINE 1.4 TSI	14 /	**PD/1490-B**		**PD/1491**		
GOLF GTi MKV	06 /	**PD/1000-B**	Teves	**PD/1030**	Lucas	
GOLF VARIANT 2.0 GL	94 /	**PD/329**	Girling	**PD/362**	Girling	Discos Ventilados
GOLF VARIANT 2.0 GL	94 /	**PD/466**	Girling	**PD/362**	Girling	Discos Ventilados
GOLF VI	09 /	**PD/1232-B**		**PD/1465**		
HIGH UP	14 /	**PD/58**				

MODEL / *MODELO*	YEAR - *AÑO*	FRONT *DELANTERA*	SYSTEM *SISTEMA*	REAR *TRASERA*	SYSTEM *SISTEMA*	OBS.
VOLKSWAGEN						
JETTA	06 / 09	**PD/1000-B**	Teves	**PD/1030**	Lucas	
JETTA	10 /	**PD/1457-B**		**PD/1456**		
JETTA 1.6 FSi	08-05 /	**PD/1000-B**	Teves	**PD/1030**	Lucas	
JETTA 1.6i	08-05 /	**PD/1000-B**	Teves	**PD/1030**	Lucas	
JETTA 1.9 TDi	08-05 /	**PD/1000-B**	Teves	**PD/1030**	Lucas	
JETTA 2.0 Fsi	08-05 /	**PD/1000-B**	Teves	**PD/1030**	Lucas	
JETTA 2.0 TDi	08-05 /	**PD/1000-B**	Teves	**PD/1030**	Lucas	
JETTA A2	87 / 92	**PD/495**				
JETTA A2 1.8L	87 / 92	**PD/328**				
JETTA A2 GLI 2.0L	90 / 93	**PD/467**		**PD/362**		
JETTA A3	95 / 99	**PD/368**				
JETTA A3	97 / 99	**PD/329**		**PD/362**		
JETTA A3 1.8L	93 / 94	**PD/328**				
JETTA A3 1.8L	95 / 99	**PD/367**				
JETTA A3 2.0L	93 / 96	**PD/413** **PD/337**		**PD/362**		
JETTA A3 2.0L	97 / 99	**PD/413** **PD/337**		**PD/362**		
JETTA A3 VR6	96 / 99	**PD/384**		**PD/362**		
JETTA A3 VR6 2.8L	93 / 95	**PD/443** **PD/602**		**PD/362**		
JETTA A4	99 / 09	**PD/58-B**		**PD/59**		
JETTA A4 2.0L	99 / 09	**PD/58-B**		**PD/59**		
JETTA A4 2.0L	01 / 03	**PD/58-B**		**PD/59**		
JETTA A4 TURBO 1.8L T	99 / 07	**PD/340-B**		**PD/59**		
JETTA A4 VR6 2.8L	99 / 04	**PD/340-B**		**PD/59**		
JETTA BASE 2.5L	09 /	**PD/1000-B**	Teves	**PD/1030**	Lucas	
JETTA BASE 2.5L 170 CV	09 /	**PD/1000-B**	Teves	**PD/1030**	Lucas	
JETTA COMFORTLINE 2.0	11 /	**PD/58-B**	Teves	**PD/1465**		
JETTA HIGHLINE 2.0 TSI	11 /	**PD/58-B**	Teves	**PD/1465**		
JETTA TDI	05 /	**PD/1000-B**	Teves	**PD/1030**	Lucas	
JETTA VARIANT BASE 2.5L 170 CV	09 /	**PD/1000-B**	Teves	**PD/1030**	Lucas	
KARMAN-GUIA	62 / 69	**VW/262**	VW	**VW/264**	VW	
KLEINBUS 2000	94 /	**PD/473**	Girling			
KOMBI 1.6L	74 / 88	**PD/13**				
KOMBI 1.8L	89 / 01	**PD/13**				
KOMBI - FURGON	81 / 86	**PD/306**	Varga	**VW/270**	VW	
KOMBI 1500	67 / 75	**VW/270**	VW	**VW/271**	VW	
KOMBI 1600	76 / 82	**VW/270**	VW	**VW/271**	VW	
KOMBI FURGÃO	82 /	**PD/13**	Teves	**VW/275**	VW	Freio traseiro Ø 254x56mm
KOMBI PICK-UP	82 /	**PD/13**	Teves	**VW/275**	VW	Freio traseiro Ø 254x56mm
KOMBI STD	82 /			**VW/279-CPA**		Freio traseiro Ø 254x56mm
LOGUS 1.6	93 / 97	**PD/34** **PD/35**	Teves Bendix	**FD/63-S/F** **FD/126-CPA**	Varga	
LOGUS 1.8	93 / 97	**PD/34** **PD/35**	Teves Bendix	**FD/63-S/F** **FD/126-CPA**	Varga	
LOGUS GLS 2.0	93 / 97	**PD/39**	Teves	**PD/36**	Teves	
LT 28 II	04-96 / 05-01	**PD/417-A**	Teves	**PD/659-A**	Teves	
LT 35 II	04-96 / 05-01	**PD/417-A**	Teves	**PD/341-A**	Teves	
LT 35 II	06-01 /	**PD/417-A**	Teves	**PD/118-A**	Bosch	
LT 46	04-96 / 03-03	**PD/111-A**	Wabco	**PD/111-A**	Wabco	
LT 46	04-03 /	**PD/111**	Wabco	**PD/111**	Wabco	
LUPO 1.6L	04 / 09	**PD/73**				
MOVE UP 1.0 MPI	14 /	**PD/58**				
NEW BEATLE 2.0 8V	99 /	**PD/58** **PD/58-B**	Teves			

MODEL / *MODELO*	YEAR - *AÑO*	FRONT *DELANTERA*	SYSTEM *SISTEMA*	REAR *TRASERA*	SYSTEM *SISTEMA*	OBS.
VOLKSWAGEN						
PARATI	82 / 86	**PD/17**	Teves	**VW/274**	VW	
PARATI 1.0	97 /	**PD/51**	Teves	**VW/276**	VW	
PARATI 1.0	97 /	**PD/54**	Varga	**VW/276**	VW	
PARATI 1.0	08 / 04-11	**PD/1100**	Teves			(Geração V) Disco 256x18mm
PARATI 1.0 / 1.6	12 /	**PD/1346**	Teves			
PARATI 1.0 16V	97 / 06-09	**PD/51** **PD/54**	Teves Varga	**VW/276**	VW	
PARATI 1.0 16V	07-09 /	**PD/81** **PD/54**	Teves Varga	**VW/276**	VW	
PARATI 1.6	08 / 04-11	**PD/1100**	Teves			(Geração V) Disco 256x18mm
PARATI 1.6	86 / 93	**PD/17**	Teves	**VW/276**	VW	
PARATI 1.6	94 / 95	**PD/43**	Teves	**VW/276**	VW	
PARATI 1.6	95 / 06-09	**PD/51** **PD/54**	Teves Varga	**VW/276**	VW	
PARATI 1.6	07-09 /	**PD/81** **PD/54**	Teves Varga	**VW/276**	VW	
PARATI 1.6	86 / 93	**PD/17**	Teves	**VW/276**	VW	Brasileros
PARATI 1.6	94 / 95	**PD/43**	Teves	**VW/274**	VW	
PARATI 1.6 / 1.8	95 /	**PD/51**	Teves	**VW/276**	VW	
PARATI 1.6 / 1.8	95 /	**PD/54**	Varga	**VW/276**	VW	
PARATI 1.8	86 / 95	**PD/23**	Teves	**VW/276**	VW	
PARATI 1.8	95 / 06-09	**PD/51** **PD/54**	Teves Varga	**VW/276**	VW	
PARATI 1.8	07-09 /	**PD/81** **PD/54**	Teves Varga	**VW/276**	VW	
PARATI 1.8	95 /	**PD/44** **PD/44-B** **PD/45**	Teves Teves Varga	**VW/276**	VW	com ABS
PARATI 1.8	86 / 95	**PD/23**	Teves	**VW/276**	VW	
PARATI 1.8	95 /	**PD/44**	Teves	**PD/36**	Teves	Con ABS
PARATI 1.8	95 /	**PD/45**	Varga	**PD/36**	Teves	Con ABS
PARATI 1.8	95 /	**PD/44**	Teves	**VW/276**	VW	Con ABS
PARATI 1.8	95 /	**PD/45**	Varga	**VW/276**	VW	Con ABS
PARATI 1.8 16V	95 /	**PD/44** **PD/44-B** **PD/45**	Teves Teves Varga	**PD/36**	Teves	com ABS
PARATI 2.0	97 / 06-09	**PD/51** **PD/54**	Teves Varga	**VW/276**	VW	
PARATI 2.0	07-09 /	**PD/81** **PD/54**	Teves Varga	**VW/276**	VW	
PARATI 2.0	97 /	**PD/44** **PD/44-B** **PD/45**	Teves Teves Varga	**PD/36**	Teves	com ABS
PASSAT	74 / 78	**PD/17**	Teves	**VW/273**	VW	
PASSAT	02 / 05	**PD/525-A**		**PD/59**		
PASSAT	10 /	**PD/1457-B**		**PD/1456**		
PASSAT 1.9 TDi	08-05 /	**PD/1000-B**	Teves	**PD/1030**	Lucas	
PASSAT 2.0L	91 /	**PD/413** **PD/337**		**PD/362**		
PASSAT 2.0L	92 / 93	**PD/443** **PD/602**		**PD/362**		
PASSAT 2.0T / 3.6L	06 / 09	**PD/1000-B**		**PD/1030**		
PASSAT 1.6	79 / 89	**PD/17**	Teves	**VW/274**	VW	
PASSAT 1.6	10-00 /	**PD/525-A**	Teves	**PD/362**	Girling	Importado
PASSAT 1.6 / 1.8 / 1.9	97 /	**PD/413**	Girling			Discos Ventilados
PASSAT 1.6 / 1.8 / 1.9	97 /	**PD/466**	Girling			Discos Ventilados
PASSAT 1.6 / 1.8 / 1.9	97 /	**PD/443**	Girling			Discos Sólidos
PASSAT 1.6 / 1.8 / 1.9	97 /	**PD/467**	Girling			Discos Sólidos
PASSAT 1.6 / 1.9	95 /	**PD/336**	Girling			Discos Sólidos
PASSAT 1.6 / 1.9	95 /	**PD/467**	Girling			Discos Sólidos

MODEL / *MODELO*	YEAR - *AÑO*	FRONT *DELANTERA*	SYSTEM *SISTEMA*	REAR *TRASERA*	SYSTEM *SISTEMA*	OBS.
VOLKSWAGEN						
PASSAT 1.6 FSi	08-05 /	**PD/1000-B**	Teves	**PD/1030**	Lucas	
PASSAT 1.6i	08-05 /	**PD/1000-B**	Teves	**PD/1030**	Lucas	
PASSAT 1.8	84 / 89	**PD/23**	Teves	**VW/274**	VW	
PASSAT 1.8	10-00 /	**PD/525-A**	Teves	**PD/362**	Girling	Importado
PASSAT 1.8 / 2.0	98 /	**PD/337**	Girling	**PD/362**	Girling	Discos Ventilados
PASSAT 1.8 20V	97 / 04-99	**PD/384**	Teves	**PD/362**	Girling	Importado
PASSAT 1.8 20V/ TURBO/ 2.0 20V	97 /	**PD/384** **PD/384-A**	Teves			
PASSAT 1.8 i GT / 2.0 GT 16V	90 /	**PD/329**	Girling	**PD/362**	Girling	Discos Ventilados
PASSAT 1.8 i GT / 2.0 GT 16V	90 /	**PD/466**	Girling	**PD/362**	Girling	Discos Ventilados
PASSAT 1.8 Turbo	97 / 04-99	**PD/384**	Teves	**PD/362**	Girling	Importado
PASSAT 1.9 TDi	10-00 / 07-05	**PD/525-A**	Teves	**PD/362**	Girling	Importado
PASSAT 2.0	10-00 /	**PD/525-A**	Teves	**PD/362**	Girling	Importado
PASSAT 2.0	88 / 96	**PD/329** **PD/367**	Girling Bosch	**PD/362**	Girling	Importado
PASSAT 2.0 16V	93 / 96	**PD/384-A**	Teves	**PD/362**	Girling	Importado
PASSAT 2.0 20V	97 / 04-99	**PD/384**	Teves	**PD/362**	Girling	Importado
PASSAT 2.0 FSi	08-05 /	**PD/1000-B**	Teves	**PD/1030**	Lucas	
PASSAT 2.0 i 16V CL / GL / GT / GLS	89 /	**PD/329**	Girling	**PD/362**	Girling	Discos Ventilados
PASSAT 2.0 i 16V CL / GL / GT / GLS	89 /	**PD/466**	Girling	**PD/362**	Girling	Discos Ventilados
PASSAT 2.0 i GT 16V	95 /	**PD/329**	Girling	**PD/362**	Girling	Discos Ventilados
PASSAT 2.0 i GT 16V	95 /	**PD/466**	Girling	**PD/362**	Girling	Discos Ventilados
PASSAT 2.0 TDi	08-05 /	**PD/1000-B**	Teves	**PD/1030**	Lucas	
PASSAT 2.3 VR5	10-00 /	**PD/525-A**	Teves	**PD/362**	Girling	Importado
PASSAT 2.5 TDI	10-00 /	**PD/525-A**	Teves	**PD/362**	Girling	Importado
PASSAT 2.8 V6	97 / 04-99	**PD/384**	Teves	**PD/362**	Girling	Importado
PASSAT 2.8 V6	10-00 /	**PD/525-A**	Teves	**PD/362**	Girling	Importado
PASSAT 2.8 VR6	93 / 96	**PD/384** **PD/384-A**	Teves	**PD/362**	Girling	Importado
PASSAT 3.2 FSi	08-05 /	**PD/1000-B**	Teves	**PD/1030**	Lucas	
PASSAT 3.6i R36 4M	08-05 /	**PD/1000-B**	Teves	**PD/1030**	Lucas	
PASSAT 4-MOTION 2.8L	06 / 08	**PD/1055**		**PD/59**		
PASSAT 4-MOTION 3.6L	06 / 08			**PD/1030**		
PASSAT CC 3.6L	06 / 08	**PD/1000-B**		**PD/1030**		
PASSAT CC 1.8 FSi	06-08 /	**PD/1000-B**	Teves	**PD/1030**	Lucas	
PASSAT CC 2.0 FSi	06-08 /	**PD/1000-B**	Teves	**PD/1030**	Lucas	
PASSAT CC 2.0 TDi	06-08 /	**PD/1000-B**	Teves	**PD/1030**	Lucas	
PASSAT CC 3.6 4 MOTION	06-08 /	**PD/1000-B**	Teves	**PD/1030**	Lucas	
PASSAT TURBO 1.8L T	92 / 93	**PD/467**		**PD/362**		
PASSAT TURBO 1.8L T	99 / 01	**PD/384-A**		**PD/362**		
PASSAT VARIANT 1.6 FSi	08-05 /	**PD/1000-B**	Teves	**PD/1030**	Lucas	
PASSAT VARIANT 1.6i	08-05 /	**PD/1000-B**	Teves	**PD/1030**	Lucas	
PASSAT VARIANT 1.9 TDi	08-05 /	**PD/1000-B**	Teves	**PD/1030**	Lucas	
PASSAT VARIANT 2.0 FSi	08-05 /	**PD/1000-B**	Teves	**PD/1030**	Lucas	
PASSAT VARIANT 2.0 TDi	08-05 /	**PD/1000-B**	Teves	**PD/1030**	Lucas	
PASSAT VARIANT 3.2 FSi	08-05 /	**PD/1000-B**	Teves	**PD/1030**	Lucas	
PASSAT VARIANT 3.6i R36 4M	08-05 /	**PD/1000-B**	Teves	**PD/1030**	Lucas	
PASSAT VR6	96 / 97	**PD/384-A**		**PD/362**		
PASSAT VR6	99 / 01	**PD/384-A**		**PD/362**		
PASSAT VR6	02 / 05	**PD/525-A**		**PD/59**		
PASSAT VR6 2.8L	96 / 97	**PD/384**		**PD/362**		
PASSAT WAGON	07 /	**PD/1000-B**	Teves	**PD/1030**	Lucas	
PASSAT WAGON 2.8L	96 / 97	**PD/384**		**PD/362**		
PHAETON	04 / 06			**PD/592-B**		
PICK-UP 1500	67 / 75	**VW/270**	VW	**VW/271**	VW	

MODEL / *MODELO*	YEAR - *AÑO*	FRONT *DELANTERA*	SYSTEM *SISTEMA*	REAR *TRASERA*	SYSTEM *SISTEMA*	OBS.
VOLKSWAGEN						
PICK-UP 1600	76 / 82	**VW/270**	VW	**VW/271**	VW	
POINTER	98 / 00	**PD/23**				
POINTER	98 / 05	**PD/51**				
POINTER	98 / 05	**PD/54**				
POINTER 1.8L	06 / 08	**PD/45**				
POINTER 1.8	94 / 96	**PD/34** **PD/35**	Teves Bendix	**FD/63-S/F** **FD/126-CPA**	Varga	
POINTER 1.8 / 2.0 / 2.0 Gli	93 / 96	**PD/34** **PD/35**	Teves Bendix	**FD/63-S/F** **FD/126-CPA**	Varga	
POINTER 2.0	94 / 96	**PD/34** **PD/35**	Teves Bendix	**FD/63-S/F** **FD/126-CPA**	Varga	
POINTER GLi 2.0	94 / 96	**PD/34** **PD/35**	Teves Bendix	**FD/63-S/F** **FD/126-CPA**	Varga	
POINTER GTi 2.0	94 / 96	**PD/39**	Teves	**PD/36**	Teves	
POINTER GTI 2.0L	00 / 06	**PD/45**				
POINTER PICK UP 1.8L	99 / 06	**PD/54**				
POINTER WAGON	99 / 05	**PD/51**				
POINTER WAGON 1.8L	99 / 06	**PD/54**				
POLO 1.6L	03 / 07	**PD/58**				
POLO 2.0L	03 / 07	**PD/520**				
POLO 1.0 16V	02 /	**PD/367**	Bosch	**VW/276**	VW	Aro 13”
POLO 1.0 16V	02 /	**PD/73** **PD/73-B**	Teves	**VW/276**	VW	Aro 14”
POLO 1.6	02 /	**PD/73** **PD/73-B**	Teves	**VW/276**	VW	Aro 14”
POLO 2.0	02 /	**PD/520**	Girling	**PD/362**	Girling	Aro 15”
POLO Clasicc / Diesel	/ 11-96	**PD/328**	Kelsey Hayes	**VW/276**	VW	
POLO Clasicc / Diesel	12-96 /	**PD/367**	Girling	**VW/276**	VW	Discos Sólidos
POLO Clasicc / Diesel	12-96 /	**PD/368**	Girling	**VW/276**	VW	Discos Ventilados
POLO CLASSIC	94 / 95	**PD/328**	K. Hayes			
POLO CLASSIC	96 /	**PD/329** **PD/367**	Girling Bosch			
POLO CLASSIC 1.6	96 /	**PD/368**	Teves			disco ventilado
POLO CLASSIC SD	96 /	**PD/368**	Teves			disco ventilado
POLO COMFORTLINE	10 /	**PD/58**	Teves			
POLO I MOTION 1.6	10 /	**PD/58**	Teves			
POLO SEDAN I MOTION 1.6	10 /	**PD/58**	Teves			
POLO SPORTLINE I MOTION 1.6	10 /	**PD/58**	Teves			
QUANTUM 1.8	85 / 88	**PD/23**	Teves	**VW/276**	VW	
QUANTUM 1.8	88 / 94	**PD/28**	Teves	**VW/276**	VW	
QUANTUM 1.8	94 /	**PD/44** **PD/44-B** **PD/45**	Teves Teves Varga	**VW/276**	VW	
QUANTUM 1.8 / 2.0	/ 94	**PD/28**	Teves	**VW/276**	VW	
QUANTUM 1.8 / 2.0	94 /	**PD/45**	Varga	**VW/276**	VW	
QUANTUM 1.8 / 2.0	94 /	**PD/44**	Teves	**VW/276**	VW	
QUANTUM 1.8 / 2.0	95 /	**PD/44-B**	Teves	**VW/276**	VW	
QUANTUM 2.0	88 / 94	**PD/28**	Teves	**VW/276**	VW	
QUANTUM 2.0	94 /	**PD/44** **PD/44-B** **PD/45**	Teves Teves Varga	**VW/276**	VW	
RED UP	14 /	**PD/58**				
ROUTAN	13 /	**PD/1408**		**PD/1410**		
ROUTAN 3.8L	09 / 10	**PD/1026**		**PD/300**		
SANTANA / QUANTUM				**VW/281-CPA**	Varga	Freio traseiro Ø 200x40mm
SANTANA 1.8	85 / 88	**PD/23**	Teves	**VW/274**	VW	
SANTANA 1.8	88 / 94	**PD/28**	Teves	**VW/274**	VW	

MODEL / *MODELO*	YEAR - *AÑO*	FRONT *DELANTERA*	SYSTEM *SISTEMA*	REAR *TRASERA*	SYSTEM *SISTEMA*	OBS.
VOLKSWAGEN						
SANTANA 1.8	94 /	**PD/44** **PD/44-B** **PD/45**	Teves Teves Varga	**VW/274**	VW	
SANTANA 1.8 / 2.0	88 / 94	**PD/28**	Teves	**VW/274**	VW	
SANTANA 2.0	94 /	**PD/44**	Teves	**VW/276**	VW	
SANTANA 2.0	94 /	**PD/45**	Varga	**VW/276**	VW	
SANTANA 2.0	85 / 88	**PD/23**	Teves	**VW/276**	VW	
SANTANA 2.0	88 / 94	**PD/28**	Teves	**VW/276**	VW	
SANTANA 2.0	94 /	**PD/44** **PD/44-B** **PD/45**	Teves Teves Varga	**VW/276**	VW	
SAVAEIRO G5 / CROSS / TROOPER	10 /			**VW/280-CPA**	Ate	Freio traseiro Ø 230x32mm
SAVEIRO	83 / 86	**PD/17**	Teves	**VW/274**	VW	
SAVEIRO 1.0	08 / 04-11	**PD/1100**	Teves	**VW/278**	TRW	(Geração V) Disco 256x18mm
SAVEIRO 1.0 / 1.6	12 /	**PD/1346**	Teves			
SAVEIRO 1.6	08 / 04-11	**PD/1100**	Teves	**VW/278**	TRW	(Geração V) Disco 256x18mm
SAVEIRO 1.6	95	**PD/23**	Teves	**VW/276**	VW	
SAVEIRO 1.6	86 / 93	**PD/17**	Teves	**VW/276**	VW	
SAVEIRO 1.6	94 / 95	**PD/43**	Teves	**VW/276**	VW	
SAVEIRO 1.6	95 / 06-09	**PD/51** **PD/54**	Teves Varga			
SAVEIRO 1.6	07-09 /	**PD/81** **PD/54**	Teves Varga			
SAVEIRO 1.6 / 1.8	95 /	**PD/51**	Teves	**VW/276**	VW	
SAVEIRO 1.6 / 1.8	95 /	**PD/54**	Varga	**VW/276**	VW	
SAVEIRO 1.8	86 / 95	**PD/23**	Teves	**VW/276**	VW	
SAVEIRO 1.8	95 / 06-09	**PD/51** **PD/54**	Teves Varga			
SAVEIRO 1.8	07-09 /	**PD/81** **PD/54**	Teves Varga			
SAVEIRO 2.0	98 / 06-09	**PD/51** **PD/54**	Teves Varga			
SAVEIRO 2.0	07-09 /	**PD/81** **PD/54**	Teves Varga			
SAVEIRO 2.0	98 /	**PD/44** **PD/44-B** **PD/45**	Teves Teves Varga	**VW/276**	VW	com ABS
SAVEIRO CROSS 1.6	12 /			**VW/278**	TRW	
SAVEIRO CROSS CD CABINE DUPLA	15 /	**PD/1346**		**PD/1030**		
SAVEIRO CROSS CE	15 /	**PD/1346**		**PD/1030**		
SAVEIRO HIGHLINE CD CABINE DUPLA	15 /	**PD/1346**		**PD/1030**		
SAVEIRO STARTLINE CS	15 /	**PD/1346**		**PD/1030**		
SAVEIRO SURF 1.6 MI	09 /	**PD/367**	Bosch	**VW/278**	TRW	Disco 239x18mm
SAVEIRO SURF 1.8 MI	09 /	**PD/367**	Bosch	**VW/278**	TRW	Disco 239x18mm
SAVEIRO TITAN 1.6 MI	09 /	**PD/367**	Bosch	**VW/278**	TRW	Disco 239x18mm
SAVEIRO TRENDLINE CD CABINE DUPLA	15 /	**PD/1346**		**PD/1030**		
SAVEIRO TRENDLINE CE	15 /	**PD/1346**		**PD/1030**		
SAVEIRO TRENDLINE CS	15 /	**PD/1346**		**PD/1030**		
SAVEIRO TROPER 1.6 MI 8V	09 /	**PD/367**	Bosch	**VW/278**	TRW	Disco 239x18mm
SEDAN 1.6L	92 / 03	**PD/5**				
SEDAN 1200	53 / 60	**VW/264**	VW	**VW/264**	VW	
SEDAN 1200	61 / 66	**VW/262**	VW	**VW/264**	VW	
SEDAN 1300	67 / 75	**VW/262**	VW	**VW/264**	VW	
SEDAN 1300 L	75 / 82	**VW/262**	VW	**VW/262**	VW	
SEDAN 1300 LG	81 / 83	**VW/262**	VW	**VW/262**	VW	
SEDAN 1500	70 / 76	**PD/5** **VW/262**	Teves VW	**VW/262**	VW	
SEDAN 1600	69 / 71			**VW/262**	VW	4 Portas

MODEL / *MODELO*	YEAR - *AÑO*	FRONT *DELANTERA*	SYSTEM *SISTEMA*	REAR *TRASERA*	SYSTEM *SISTEMA*	OBS.
VOLKSWAGEN						
SEDAN 1600	75 / 76	**PD/5**	Teves	**VW/262**	VW	
SEDAN 1600	77 / 83			**VW/272**	VW	
SENDA	90 /	**PD/23**	Teves	**VW/274**	VW	
SENDA 1.6	94	**PD/43**	Teves	**VW/274**	VW	
SP-2	72 / 76	**PD/6**	Teves	**VW/272**	VW	
SPACE CROSS 1.6 8V (flex)	11 /	**PD/58**	Teves	**VW/276** **VW/276-CPA**	VW	
SPACE CROSS 1.6 8V I-Motion (flex)	11 /	**PD/58**	Teves	**VW/276** **VW/276-CPA**	VW	
SPACE FOX 1.6 CONFORTLINE 8V T.FLEX	07 /	**PD/58**	Teves	**VW/276**	VW	
SPACE FOX 1.6 PLUS 8V T.FLEX	07 /	**PD/58**	Teves	**VW/276**	VW	
SPACE FOX 1.6 ROUTE 8V T.FLEX	07 /	**PD/58**	Teves	**VW/276**	VW	
SPORT VAN 1.6L	07 / 08	**PD/58**				
SURAN 1.6 COMFORTLINE	07 /	**PD/58**	Teves	**VW/276**	VW	
SURAN 1.6 CROSS	07 /	**PD/58**	Teves	**VW/276**	VW	
SURAN 1.6 HIGHLINE	07 /	**PD/58**	Teves	**VW/276**	VW	
SURAN 1.6 TRENDLINE	07 /	**PD/58**	Teves	**VW/276**	VW	
TAKE UP 1.0 MPI	14 /	**PD/58**				
TIGUAN	09 /	**PD/1000-B**	Teves	**PD/1030**	Lucas	
TIGUAN 2.0 TSI	09 /	**PD/1457-B**		**PD/1456**		
TL 1600	70 / 75	**PD/5**	Teves	**VW/272**	VW	
TOUAREG	11 /	**PD/1463**	Brembo	**PD/1464**		
TOUAREG V6 3.2L	04 / 05	**PD/1079**				
TOUAREG V6 TDI 3.0L	09 / 10	**PD/1079**				
TOUAREG V8 4.2L	04 / 07	**PD/1064**				
TRANSPORTER 1.9 D / TD	90 /	**PD/487**	Girling			
TRANSPORTER 2.0	90 /	**PD/487**	Girling			
TRANSPORTER 2.4 / 2.5 SYNCRO	96 /	**PD/487**	Girling			
TRANSPORTER 2.4 D / TD / 2.5 TDi	00 /	**PD/481-A**	Teves	**PD/407**	Akebono	
TRANSPORTER 2.5	90 /	**PD/487**	Girling			
TRANSPORTER 2.5 SYNCRO	96 /	**PD/487**	Girling			
TRANSPORTER 4 Puertas	96 /	**PD/406**	Akebono	**PD/407**	Akebono	
TRANSPORTER 5 Puertas / Elevado	98 /	**PD/406**	Akebono	**PD/407**	Akebono	
UP 1.0 Flex	14/	**PD/1499**				
ROUTAN 3.6	08/			**PD/1350**		
VAN	99 /	**PD/329**	Girling	**VW/277** **VW/278**	VW	Freio Ø230X40mm Freio Ø230X30mm
VAN	99 /			**VW/280-CPA**	Ate	Freio traseiro Ø 230x32mm
VAN	03 / 06	**PD/413** **PD/337**				
VAN	03 / 06	**PD/329**				
VARIANT	78 / 80	**PD/6**	Teves	**VW/272**	VW	
VARIANT 1600	69 / 77	**PD/5**	Teves	**VW/272**	VW	
VARIANT 2.0	88 / 96	**PD/329** **PD/367**	Girling Bosch	**PD/362**	Girling	Importado
VENTO	09 /	**PD/1000-B**	Teves	**PD/1030**	Lucas	
VOLKSBUS 5.150 OD		**PD/109**	Master	**FD/72**	Master	
VOLKSBUS 8.160 OD		**FD/59**	Master	**FD/59**	Master	
VOLKSBUS 9.160 OD		**FD/59**	Master	**FD/59**	Master	
VOLKSBUS 15.190 OD	11-10 /	**FD/88**	Master	**VV/307**	Master	
VOLKSBUS 17.230 OD	/ 09-14	**FD/88**	Master	**4710**	Master	
VOLKSBUS 17.230 OD	10-14 /	**MP/410**	Master	**MP/411**	Master	
VOLKSBUS 17.260 OD	/ 09-14	**FD/88**	Master	**4710**	Master	
VOLKSBUS 17.260 OD	10-14 /	**MP/410**	Master	**MP/411**	Master	
VOLKSBUS 17.280 OT		**FD/88**	Master	**4710**	Master	
VOLKSBUS 17.280 OT VTRONIC		**FD/88**	Master	**4710**	Master	

MODEL / *MODELO*	YEAR - *AÑO*	FRONT *DELANTERA*	SYSTEM *SISTEMA*	REAR *TRASERA*	SYSTEM *SISTEMA*	OBS.
VOLKSWAGEN						
VOLKSBUS 17.280 OT LOWENTRY		**FD/88**	Master	**4710**	Master	
VOLKSBUS 18.330 OT	02-11 /	**FD/88**	Master	**4710**	Master	
VOLKSBUS 26.330 OTA		**FD/88**	Master	**4710**	Master	2º e 3º eixos
VOYAGE	90 /	**PD/23**	Teves	**VW/274**	VW	
VOYAGE	81 / 83	**PD/16**	Teves	**VW/274**	VW	
VOYAGE 1.0	09 / 04-11	**PD/1100**	Teves	**VW/274**		Disco 256x18mm
VOYAGE 1.0	09 /	**PD/367**	Bosch			
VOYAGE 1.0 / 1.6	12 /	**PD/1346**	Teves			
VOYAGE 1.0 8V	08 /	**PD/368**	Teves			Disco Ventilado
VOYAGE 1.6	09 / 04-11	**PD/1100**	Teves	**VW/276 VW/276-CPA**	TRW	Disco 256x18mm
VOYAGE 1.6	83 / 93	**PD/17**	Teves	**VW/274**	VW	
VOYAGE 1.6	94 / 95	**PD/43**	Teves	**VW/274**	VW	
VOYAGE 1.6	95	**PD/23**	Teves	**VW/274**	VW	
VOYAGE 1.6	09 /	**PD/367**	Bosch			
VOYAGE 1.8	84 / 95	**PD/23**	Teves	**VW/274**	VW	
VOYAGE CONFORTLINE 1.6	08 / 04-11	**PD/1100**	Teves	**VW/276 VW/276-CPA**	TRW	Disco 256x18mm
VOYAGE CONFORTLINE 1.6	08 /	**PD/367**	Bosch			
VOYAGE TREND 1.6	08 / 04-11	**PD/1100**	Teves	**VW/276 VW/276-CPA**	TRW	Disco 256x18mm
VOYAGE TREND 1.6	08 /	**PD/367**	Bosch			
VW 5-140 Delivery	05 /	**PD/109**	Varga	**FD/72**	Bendix	
VW 6-80	82 / 86	**VW/255**		**VW/255**		
VW 6-90	82 / 94	**VW/255**		**VW/255**		
VW 7-100	99 / 02	**FD/77**	Master	**FD/77**	Master	
VW 7-110	03 /	**FD/58**	Master HD	**FD/58**	Master HD	
VW 7-110 S	87 / 94	**VW/255**		**VW/255**		
VW 7-90	82 / 94	**VW/255**		**VW/255**		
VW 7-90 S	87 / 94	**VW/255**		**VW/255**		
VW 8-100	99	**FD/77**	Master	**FD/77**	Master	
VW 8-120	00 / 02	**FD/77**	Master	**FD/77**	Master	
VW 8-120	03 /	**FD/58**	Master HD	**FD/58**	Master HD	
VW 8-120	03 /	**FD/58**	Master HD	**FD/59**	Master HD	Ómnibus
VW 8-120 EOD	06 /	**FD/59**	Master	**FD/59**	Master	Ônibus
VW 8-120 OD	03 /	**FD/58**	Master	**FD/59**	Master	Ônibus
VW 8-120 Worker	04 /	**FD/58 FD/59**	Master	**FD/58 FD/59**	Master	
VW 8-140	93 / 00	**FD/77**	Master	**FD/77**	Master	
VW 8-150	00 / 02	**FD/77**	Master	**FD/77**	Master	
VW 8-150	03 /	**FD/77**	Master HD	**FD/77**	Master HD	
VW 8-150	03 /	**FD/58**	Master HD	**FD/59**	Master HD	Ómnibus
VW 8-150 Delivery	05 /	**FD/58**	Master	**FD/58**	Master	
VW 8-150 Delivery	05 /	**PD/109**	Master	**FD/58**	Master	
VW 8-150 Delivery Plus	04 /	**FD/58 FD/59**	Master	**FD/58 FD/59**	Master	
VW 8-150 OD	00 / 02	**FD/77**	Master	**FD/77**	Master	Ônibus
VW 8-150 OD	03 /	**FD/58**	Master	**FD/59**	Master	Ônibus
VW 8-150 Worker	04 /	**FD/58 FD/59**	Master	**FD/58 FD/59**	Master	
VW 8-160 Delivery Advantech		**FD/59**	Master	**FD/59**	Master	
VW 8-160 Delivery Advantech		**FD/88**	Master	**4710**	Master	
VW 9-140	98 / 02	**FD/77**	Master	**FD/77**	Master	Argentino
VW 9-150	00 / 02	**FD/77**	Master	**FD/77**	Master	
VW 9-150	03 /	**FD/58**	Master HD	**FD/59**	Master HD	Ónibus

MODEL / *MODELO*	YEAR - *AÑO*	FRONT *DELANTERA*	SYSTEM *SISTEMA*	REAR *TRASERA*	SYSTEM *SISTEMA*	OBS.
VOLKSWAGEN						
VW 9-150 Delivery	04 /	**FD/58 FD/59**	Master	**FD/58 FD/59**	Master	
VW 9-150 E Worker	04 /	**FD/58 FD/59**	Master	**FD/58 FD/59**	Master	
VW 9-150 EOD	06 /	**FD/59**	Master	**FD/59**	Master	Ônibus
VW 9-150 OD	03 /	**FD/58**	Master	**FD/59**	Master	Ônibus
VW 9-160 Delivery Advantech		**FD/59**	Master	**FD/59**	Master	
VW 9-160 Delivery Advantech		**FD/88**	Master	**4710**	Master	
VW 10-160 DELIVERY	06-11 /	**FD/59**	Master	**FD/59**	Master	
VW 11.130	81	**VW/256**	Bendix	**VW/257**	Bendix	
VW 11.130	81 / 86	**FD/80**	Varga	**FI/117 FI/119**	Varga Master	
VW 11.140	87 / 89	**FD/80**	Varga	**FI/117 FI/119**	Varga Master	
VW 11.140	89 / 90	**FD/83**	Bendix	**FD/84**	Bendix	
VW 11.140	91 / 93	**FD/86**	Master	**FD/87**	Master	
VW 11.160	85 / 86	**FD/80**	Varga	**FI/117 FI/119**	Varga Master	
VW 12.140	87 / 89	**FD/80**	Varga	**FI/117 FI/119**	Varga Master	
VW 12.140	90 / 91	**FD/86**	Master	**FD/88**	Master	
VW 12.140	91 / 96	**FD/86**	Master	**FD/87**	Master	
VW 12.140	87 / 89			**FI/119**	Master	
VW 12.140 H	91 /	**FD/86**	Master	**FD/87**	Master	
VW 12.170 BT	97 /	**FD/86**	Master	**FD/87**	Master	
VW 13.130	81 / 86	**FD/80**	Varga	**FI/117 FI/119**	Varga Master	
VW 13.150	99 /	**FD/86**	Master	**FD/87**	Master	
VW 13.170	99 / 02	**FD/86**	Master	**FD/87**	Master	
VW 13.180	99 /	**FD/86**	Master	**FD/87**	Master	
VW 13.180 Constellation	06 /	**FD/87**	Master	**FD/87**	Master	
VW 13.180 Worker	04 / 08	**FD/86**	Master	**FD/87**	Master	
VW 13.180 Worker	08 /	**FD/87**	Master	**FD/87**	Master	
VW 13.190	99 /	**FD/86**	Master	**FD/87**	Master	
VW 14.140	87 / 89	**FD/80**	Varga Master	**FI/117 FI/119**	Varga Master	
VW 14.140	89 / 91	**FD/86**	Master	**FD/88**	Master	
VW 14.150	91 / 99	**FD/86**	Master	**FD/88**	Master	**FD/88**
VW 14.170	88 / 89	**4524-B**	Master	**4514-G**	Master	
VW 14.170 BT	97 /	**FD/86**	Master	**FD/88**	Master	
VW 14.200	91 /	**FD/86**	Master	**FD/88**	Master	
VW 14.210	88 / 91	**4524-B**	Master	**4514-G**	Master	
VW 14.220	91 / 99	**FD/86**	Master	**FD/88**	Master	**FD/88**
VW 15.160	99 /	**FD/86**	Master	**FD/88**	Master	**FD/88**
VW 15.170	09-99 / 02	**FD/86**	Master	**FD/88**	Master	
VW 15.180	09-99 /	**FD/86**	Master	**FD/88**	Master	
VW 15.180	05 /	**FD/88**	Master	**4710**	Master	Ônibus
VW 15.180	00 /	**FD/86**	Master	**FD/88**	Master	
VW 15.180 Constellation	06 /	**FD/87**	Master	**FD/88**	Master	
VW 15.180 Worker		**FD/86**	Master	**FD/88**	Master	
VW 15.180 worker		**FD/87**	Master	**FD/88**	Master	
VW 15.180 Worker 4x4 Militar	09 /			**FD/88**	Master	
VW 15.190	09-99 /	**FD/86**	Master	**FD/87**	Master	
VW 15.190 EOD	07 /	**FD/88**	Master	**4710**	Master	Ônibus
VW 15.190 Constellation	10-11 /	**FD/87**	Master	**FD/87**	Master	
VW 16.170	88 / 89	**4524-B**	Master	**4514-G**	Master	
VW 16.170	90 / 96	**FD/87**	Master	**FD/88**	Master	

MODEL / *MODELO*	YEAR - *AÑO*	FRONT *DELANTERA*	SYSTEM *SISTEMA*	REAR *TRASERA*	SYSTEM *SISTEMA*	OBS.
VOLKSWAGEN						
VW 16.170	90 / 96	**FD/87**	Master	**FD/88**	Master	
VW 16.170 BT	97 / 99	**FD/87**	Master	**FD/88**	Master	3° eixo **FD/88**
VW 16.180 B	93 / 97	**FD/87**	Master	**FD/88**	Master	Ônibus
VW 16.200	97 /	**FD/87**	Master	**FD/88**	Master	3° eixo **FD/88**
VW 16.210	88 / 90	**4524-B**	Master	**4514-G**	Master	
VW 16.210 B	98 / 09-00	**FD/88**	Master	**4710**	Master	Ônibus
VW 16.210 CO	10-00 / 02	**FD/88**	Master	**4710**	Master	
VW 16.210 H	88 / 90	**4524-B**	Master	**4514-G**	Master	
VW 16.220	90 / 96	**FD/87**	Master	**FD/88**	Master	
VW 16.220	97 /	**FD/87**	Master	**FD/88**	Master	3° eixo **FD/88**
VW 16.220	90 / 96	**FD/87**	Master	**FD/88**	Master	
VW 16.300	96 / 00	**FD/87**	Master	**FD/88**	Master	
VW 17.160	99 /	**FD/87**	Master	**FD/88**	Master	**FD/88** Argentino
VW 17.180 Worker	04 /	**FD/87**	Master	**FD/88**	Master	
VW 17.190 Worker	08-12 /	**FD/87**	Master	**FD/88**	Master	
VW 17.210	09-99 /	**FD/87**	Master	**FD/88**	Master	
VW 17.210	09-99 /	**FD/88**	Master	**4710**	Master	Lixo
VW 17.210	00 /	**FD/87**	Master	**FD/88**	Master	
VW 17.210 OD	09-99 /	**FD/88**	Master	**4710**	Master	Ônibus
VW 17.220	09-99 /	**FD/87**	Master	**FD/88**	Master	
VW 17.220	09-99 /	**FD/88**	Master	**4710**	Master	Lixo
VW 17.220	98 /	**FD/87**	Master	**FD/88**	Master	**FD/88** Argentino
VW 17.220 Worker	04 /	**FD/87**	Master	**FD/88**	Master	
VW 17.220 Worker Tractor	04 /	**FD/87**	Master	**FD/88**	Master	
VW 17.230 EOD	07 /	**FD/88**	Master	**4710**	Master	Ônibus
VW 17.230 EOD V-TRONIC	07 /	**FD/88**	Master	**4710**	Master	Ônibus
VW 17.240	00 /	**FD/88**	Master	**4710**	Master	Ómnibus
VW 17.240 OT	00 /	**FD/88**	Master	**4710**	Master	Ônibus
VW 17.250	06 /	**FD/88**	Master	**4710**	Master	Lixo
VW 17.250 Constellation	06 /	**FD/87**	Master	**FD/88**	Master	
VW 17.250 E Worker	04 /	**FD/87**	Master	**FD/88**	Master	
VW 17.260 EOT	04 /	**FD/88**	Master	**4710**	Master	Ônibus
VW 17.260 EOT V-1	05 /	**FD/88**	Master	**4710**	Master	Ônibus
VW 17.280 Constellation Advantech		**FD/87**	Master	**FD/88**	Master	
VW 17.290 Constellation	12 /	**FD/87**	Master	**FD/88**	Master	
VW 17.300	09-99 / 02	**FD/87**	Master	**FD/88**	Master	
VW 17.300/35	99 /	**FD/87**	Master	**FD/88**	Master	Argentino
VW 17.300/43	99 /	**FD/87**	Master	**FD/88**	Master	**FD/88** Argentino
VW 17.310 TITAN	09-99 /	**FD/87**	Master	**FD/88**	Master	
VW 17.330 Constellation	07-11 /	**FD/87**	Master	**FD/88**	Master	
VW 17-260 EOT	04 /	**FD/88**	Master	**4710**	Master	Ómnibus
VW 18.310	01 /	**FD/88**	Master	**4710**	Master	Ônibus
VW 18.310 OT	00 /	**FD/88**	Master	**4710**	Master	Ônibus
VW 18.310 TITAN	01 /	**FD/87**	Master	**FD/88**	Master	
VW 18.320 EOT	07 /	**FD/88**	Master	**4710**	Master	Ônibus
VW 19.320 Constellation	06 /	**FD/87**	Master	**FD/88**	Master	
VW 19.330 Constellation	07-11 /	**FD/87**	Master	**FD/88**	Master	
VW 19.370 Constellation	08 /	**FD/87**	Master	**FD/88**	Master	
VW 19.390 Constellation	07-11 /	**FD/87**	Master	**FD/88**	Master	
VW 19.420 Constellation	07-11 /	**FD/87**	Master	**FD/88**	Master	
VW 22.140	88 / 89	**FD/80**	Varga Master	**FI/117 FI/119**	Varga Master	3° eixo **FI/117 FI/119**
VW 22.140	89 / 90	**FD/86**	Master	**FD/88**	Master	

MODEL / *MODELO*	YEAR - *AÑO*	FRONT *DELANTERA*	SYSTEM *SISTEMA*	REAR *TRASERA*	SYSTEM *SISTEMA*	OBS.
VOLKSWAGEN						
VW 22.140	89 / 90	**FD/83**	Bendix	**FD/84**	Bendix	**FD/84**
VW 22.140	90 / 91	**FD/86**	Bendix	**FD/88**	Bendix	**FD/88**
VW 22.160	85 / 87	**FD/80**	Varga Master	**FI/117** **FI/119**	Varga Master	3° eixo **FI/117** **FI/119**
VW 22.200	90 / 95	**FD/87**	Master	**FD/88**	Master	
VW 23.210	01 /	**FD/87**	Master	**FD/88**	Master	3° eixo **FD/88**
VW 23.220	01 /	**FD/87**	Master	**FD/88**	Master	3° eixo **FD/88**
VW 23.250 Eletrônico	04 /	**FD/87**	Master	**FD/88**	Master	3° eixo **FD/88**
VW 23.310 TITAN	01 /	**FD/87**	Master	**FD/88**	Master	3° eixo **FD/88**
VW 23-310 TITAN	01 /	**FD/87**	Master	**FD/88**	Master	3° Eixo **FD/88**
VW 24.220	95 /	**FD/87**	Master	**FD/88**	Master	
VW 24.220	99 /	**FD/87**	Master	**FD/88**	Master	Argentino
VW 24.220 6x2 / 6x4	91 /	**FD/87**	Master	**FD/88**	Master	**FD/88**
VW 24.250	90 /	**FD/87**	Master	**FD/88**	Master	
VW 24.250	99 /	**FD/87**	Master	**FD/88**	Master	Argentino
VW 24.250 6x2 Constellation	06 /	**FD/87**	Master	**FD/88**	Master	3° eixo **FD/88**
VW 24.250 6x4 Caña	92 /	**FD/87**	Master	**FD/88**	Master	**FD/88**
VW 24.250 E Worker	03 /	**FD/87**	Master	**FD/88**	Master	
VW 24.280 Constellation	07-11 /	**FD/87**	Master	**FD/88**	Master	
VW 24.280 8x2 Advantech	07-11 /	**FD/87**	Master	**FD/88**	Master	
VW 24.280 V-Tronic	07-11 /	**FD/87**	Master	**FD/88**	Master	
VW 24.330 Constellation	07-11 /	**FD/87**	Master	**FD/88**	Master	
VW 25.320 6x2 Constellation	08 /	**FD/87**	Master	**FD/88**	Master	3° eixo **FD/88**
VW 25.370 6x2 Constellation	08 /	**FD/87**	Master	**FD/88**	Master	3° eixo **FD/88**
VW 25.390 Constellation	07-11 /	**FD/87**	Master	**FD/88**	Master	
VW 25.420 Constellation	07-11 /	**FD/87**	Master	**FD/88**	Master	
VW 26.220	01 /	**FD/87**	Master	**FD/88**	Master	3° eixo **FD/88**
VW 26.220 Worker	04 /	**FD/87**	Master	**FD/88**	Master	
VW 26.240 Constellation	07-11 /	**FD/87**	Master	**FD/88**	Master	
VW 26.260	01 /	**FD/87**	Master	**FD/88**	Master	3° eixo **FD/88**
VW 26.260	98 /	**FD/87**	Master	**FD/88**	Master	Argentino
VW 26.260 E Worker	04 /	**FD/87**	Master	**FD/88**	Master	
VW 26.280 Constellation	07-11 /	**FD/87**	Master	**FD/88**	Master	
VW 26.300	09-99 / 01	**FD/87**	Master	**FD/88**	Master	
VW 26.310 TITAN	09-99 /	**FD/87**	Master	**FD/88**	Master	3° eixo **FD/88**
VW 26.390 Constellation	07-11 /	**FD/87**	Master	**FD/88**	Master	
VW 31.260 E Worker	04 /	**FD/87**	Master	**FD/88**	Master	
VW 31.280 Constellation	07-11 /	**FD/87**	Master	**FD/88**	Master	
VW 31.310	05 /	**FD/87**	Master	**FD/88**	Master	3° eixo **FD/88**
VW 31.320	05 /	**FD/87**	Master	**FD/88**	Master	3° eixo **FD/88**
VW 31.330 Constellation	07-11 /	**FD/88**	Master	**FD/88**	Master	
VW 31.370 6x2 Constellation	08 /	**FD/87**	Master	**FD/88**	Master	3° eixo **FD/88**
VW 31.390 Constellation	07-11 /	**FD/88**	Master	**FD/88**	Master	
VW 35.300	90 /	**FD/87**	Master	**FD/88**	Master	**FD/88**
VW 35.300 CL	97	**FD/87**	Master	**FD/88**	Master	
VW 40.300	99 / 02	**FD/87**	Master	**FD/88**	Master	
VW B 16.180	93 / 97	**FD/87**	Master	**FD/88**	Master	Ónibus
VW B 16.210	98 /	**FD/88**	Master	**4710**	Master	Ónibus
VW D 1400	83 / 85			**FI/119**	Master	
WHITE UP	14 /	**PD/58**				
VOLVO						
940		**PD/360-A**				
960		**PD/360-A**				

MODEL / *MODELO*	YEAR - *AÑO*	FRONT *DELANTERA*	SYSTEM *SISTEMA*	REAR *TRASERA*	SYSTEM *SISTEMA*	OBS.
VOLVO						
7300	08 / 10	**PD/196**		**PD/196**		
7600 ARTICULADO CON MUELLES	04 / 05	**PD/529**		**PD/529**		
8300	04 / 06	**PD/529**		**PD/529**		
9300	04 / 05	**PD/529**		**PD/529**		
9700	04 / 07	**PD/529**		**PD/529**		
B 6	01-83 /	**PD/140-A**	Meritor			
B 7 - SERIES	05 /	**PD/529**	Meritor	**PD/529**	Meritor	
B 7BLE / 7R / 7RLE	01-95 /	**PD/112**	Meritor			
B-7 R	98 /	**VV/289**	Volvo	**VV/290**	Volvo	
B-7 R		**PD/196**	Meritor	**PD/196**	Meritor	
B-9 - Series (Articulado)	05 /	**PD/529**	Meritor	**PD/129**	Meritor	3° eixo **PD/129**
B-9 R		**PD/196**	Meritor	**PD/196**	Meritor	
B 9 - SERIES	05 /	**PD/529**	Meritor	**PD/129**	Meritor	
B 10 - SERIES	93 /	**PD/112**	Meritor			
B 10BLE / 10M / 10TLE	01-95 /	**PD/112**	Meritor			
B-10 M (Articulado)	95 /	**VV/288** **VV/289**	Volvo	**VV/290**	Volvo	3° eixo e Art. **VV/290**
B-10 M (Bi-articulado)	98 /	**VV/288** **VV/289**	Volvo	**VV/290**	Volvo	3° eixo e Art. **VV/290**
B-10 M 4x2	86 / 96	**VV/288**	Volvo	**VV/290**	Volvo	
B-10 M 4x2	89 /	**VV/288** **VV/289**	Volvo	**VV/290**	Volvo	
B-10 M 6x2	86 /	**VV/288** **VV/289**	Volvo	**VV/290**	Volvo	3° eixo **VV/288** **VV/290** Llanta artillera
B-10 R	00 /	**VV/289**	Volvo	**VV/290**	Volvo	
B 12 - SERIES	92 / 01	**PD/112**	Meritor			
B 12B / 12M	01-95 /	**PD/112**	Meritor			
B-12	96 /	**VV/289**	Volvo	**VV/290**	Volvo	
B-12 (Importado)	94 / 96	**VV/299**	Volvo	**VV/300**	Volvo	3° eixo **VV/296**
B-12 - Series	01 /	**PD/529**	Meritor	**PD/529**	Meritor	
B-12 M		**PD/196**	Meritor	**PD/196**	Meritor	
B-12-R 6x2	10 /	**PD/196**	Volvo	**PD/196**	Volvo	3° eixo **PD/196**
B-12-R 8x2	10 /	**PD/196**	Volvo	**PD/196**	Volvo	3° eixo **PD/196**
B-58 E 4x2	89 / 98	**VV/288** **VV/289**	Volvo	**VV/290**	Volvo	
B-58 E 6x2	80 / 86	**VV/288**	Volvo	**VV/290**	Volvo	3° eixo VV/288 **VV/290**
B-58 M 4x2	89 / 98	**VV/288** **VV/289**	Volvo	**VV/289** **VV/290**	Volvo	
B-270	13 /	**FD/87**	Volvo	**VV/307**	Volvo	
B-290 R	12 /	**PD/196**	Volvo	**PD/196**	Volvo	
C30	08 / 10	**PD/767**	Teves			
C30 2.4L / 2.5L	08 / 10	**PD/767**				
C30 1.6D	10-06 / 10	**PD/767**	Teves			
C30 1.6i	10-06 / 10	**PD/767**	Teves			
C30 1.8i	10-06 / 10	**PD/767**	Teves			
C30 2.0D	10-06 / 10	**PD/767**	Teves			
C30 2.0i	10-06 / 10	**PD/767**	Teves			
C30 D5	10-06 / 10	**PD/767**	Teves			
C30 T5	10-06 / 10	**PD/767**	Teves			
C70	06 /	**PD/767**	Teves	**PD/1061**		
C70	08 / 09	**PD/767**		**PD/1061**		
C70 2.3L	98 / 02	**PD/783**				
C70 2.5L	02 / 03	**PD/525-A**				
C70 278mm Brake Rotors	10 /	**PD/767**	Teves			
C70 300mm Brake Rotors	08 / 09	**PD/767**	Teves			

MODEL / *MODELO*	YEAR - *AÑO*	FRONT *DELANTERA*	SYSTEM *SISTEMA*	REAR *TRASERA*	SYSTEM *SISTEMA*	OBS.
VOLVO						
C70 305mm Brake Rotors	10 /	**PD/767**	Teves			
C70 CABRIOLET 2.4	03-06 /	**PD/767**	Teves			
C70 CABRIOLET 2.4i	03-06 /	**PD/767**	Teves			
C70 CABRIOLET D5	03-06 /	**PD/767**	Teves			
CROSS COUNTRY	02 / 03	**PD/1063**		**PD/1051**		
F-10				**VL/83/84/1**		
F-12				**VL/83/84/1**		
F-1225				**VL/83/84/1**		
F-1227				**VL/83/84/1**		
FE SERIES - 240 / 280 / 320	05-06 /	**PD/196**	Meritor	**PD/196**	Meritor	
FH 12 - SERIES	01 /	**PD/529**	Meritor	**PD/529**	Meritor	
FH-12 - SERIES	09 / 10	**PD/196**	Meritor	**PD/196**	Meritor	
FH-12/380 Globetrotter	98 /	**VV/303**	Master Z-Cam	**VV/304**	Master Z-Cam	
FH-12 GLOBETROTTER	98 /	**VV/303**	Master	**VV/304**	Master	3° eixo **CA/33**
FH-12 Serie 500	09-01 /			**PD/202**	Meritor	
FH-12/380 GLOBETROTTER	93 / 98	**VV/298**	Volvo	**VV/300**	Volvo	
FH-12	11 /			**PD/195**		3° eixo em diante
FH-13 GLOBETROTTER	98 /	**VV/303**	Master	**VV/304**	Master	3° eixo **CA/33**
FH-13	12 /	**PD/196**		**PD/196**		3° eixo **PD/195**
FH 16 - SERIES	01 /	**PD/529**	Meritor	**PD/529**	Meritor	
FH 16 SERIES - 400 / 440 / 480 - 22.5" Wheel	05-06 /	**PD/196**	Meritor	**PD/196**	Meritor	
FH 16 SERIES - 520 / 580 - 22.5" Wheel	05-06 /	**PD/196**	Meritor	**PD/196**	Meritor	
FH 16 SERIES - 660 - 22.5" Wheel	05-06 /	**PD/196**	Meritor	**PD/196**	Meritor	
FH-16 Serie 610	08-07 /			**PD/202**	Meritor	
FH-16 Series 610 / 540 / 550 / 520	01-03 /			**PD/202**	Meritor	
FL 240 / 280	05-06 /	**PD/195**	Meritor	**PD/195**	Meritor	
FL 4 SERIES - 406 / 408 / 411	01-85 / 02-90	**PD/154**	Meritor	**PD/154**	Meritor	
FL 4 SERIES - 406 / 408 / 411	03-90 /	**PD/140-A**	Meritor	**PD/140-A**	Meritor	
FL 6 SERIES - 608 / 609 / 610 / 611 / 612	01-85 / 02-90	**PD/154**	Meritor	**PD/154**	Meritor	
FL 6 SERIES - 608 / 609 / 610 / 611 / 612	03-90 /	**PD/140-A**	Meritor	**PD/140-A**	Meritor	
FL 6 SERIES - 611 / 612	00 /	**PD/159**	Meritor	**PD/159**	Meritor	
FL 6 SERIES - 613 / 614 / 615	01-85 / 02-90	**PD/154**	Meritor	**PD/154**	Meritor	
FL 6 SERIES - 613 / 614 / 615	03-90 / 99	**PD/140-A**	Meritor	**PD/140-A**	Meritor	
FL 6 SERIES - 613 / 614 / 615	00 /	**PD/160**	Meritor	**PD/160**	Meritor	
FL 6 SERIES - 616 / 617 / 618	10-91 / 00	**PD/140-A**	Meritor	**PD/140-A**	Meritor	
FL 618	00 /	**PD/529**	Meritor	**PD/529**	Meritor	
FLC 140	09-96 / 09-00	**PD/140-A**	Meritor	**PD/140-A**	Meritor	
FM - 440	07 /	**VV/303**	Master	**VV/304**	Master	
FM 12 - SERIES	01 /	**PD/529**	Meritor	**PD/529**	Meritor	
FM 9 - SERIES	01 /	**PD/529**	Meritor	**PD/529**	Meritor	
FM SERIES - 300 / 340 / 360 / 380	09-05 /	**PD/196**	Meritor	**PD/196**	Meritor	
FM SERIES - 400 / 440 / 480	09-05 /	**PD/196**	Meritor	**PD/196**	Meritor	
FM-10	00 /	**VV/303**	Master Z-Cam	**VV/304**	Master Z-Cam	
FM-11 370 4x2	08 /	**VV/303**	Master	**VV/304**	Master	
FM-11 370 6x2	08 /	**VV/303**	Master	**VV/304**	Master	3° eixo **CA/33**
FM-12	01 /	**VV/303**	Master	**VV/304**	Master	
FM-12 Series 340 / 420 / 460	08-98 / 09-05			**PD/202**	Meritor	
FM-9 Series 260 / 300 / 340 / 380	12-01 / 09-05			**PD/202**	Meritor	
FM-12 370	11 /	**PD/196**				
FS 718	09-94 / 03-96	**PD/140-A**	Meritor			
N-10 4x2	81 / 89	**VV/288**	Volvo	**VV/289**	Volvo	
N-10 6x4	80 / 89	**VV/288**	Volvo	**VV/289**	Volvo	3° eixo **VV/289**
N-12 4x2	80 / 89	**VV/288**	Volvo	**VV/289**	Volvo	
N-12 6x2	81 / 89	**VV/288**	Volvo	**VV/289**	Volvo	3° eixo **VV/289**

MODEL / *MODELO*	YEAR - *AÑO*	FRONT *DELANTERA*	SYSTEM *SISTEMA*	REAR *TRASERA*	SYSTEM *SISTEMA*	OBS.
VOLVO						
N-12 6x4	81 / 89	**VV/288**	Volvo	**VV/289**	Volvo	3° eixo **VV/289**
NH-12	99 /	**VV/303**	Master Z-Cam	**VV/304**	Master Z-Cam	3° eixo **CA/33**
NL-10 4x2	89 / 93	**VV/288**	Volvo	**VV/289**	Volvo	
NL-10 4x2	93 / 98	**VV/288**	Volvo	**VV/289**	Volvo	3° eixo **VV/288**
NL-10 6x2	90 / 93	**VV/288**	Volvo	**VV/289**	Volvo	3° eixo **VV/289**
NL-10 6x4	89 / 93	**VV/288**	Volvo	**VV/289**	Volvo	3° eixo **VV/289**
NL-10 6x4	93 / 98	**VV/288**	Volvo	**VV/289**	Volvo	3° eixo **VV/288**
NL-12 4x2	89 / 93	**VV/288**	Volvo	**VV/289**	Volvo	
NL-12 4x2 EDC	93 /	**VV/288**	Volvo	**VV/289**	Volvo	3° eixo **VV/288**
NL-12 6x2	89 / 93	**VV/288**	Volvo	**VV/289**	Volvo	**VV/289**
NL-12 6x2	93 / 97	**VV/288**	Volvo	**VV/289**	Volvo	3° eixo **VV/288**
NL-12 6x4	89 / 93	**VV/288**	Volvo	**VV/289**	Volvo	3° eixo **VV/289**
NL-12 6x4 EDC	93 /	**VV/288**	Volvo	**VV/289**	Volvo	3° eixo **VV/288**
S40	04 / 07	**PD/767**	Teves			
S40	00 / 04	**PD/1053**		**PD/1054**		
S40	06 / 09	**PD/767**		**PD/1061**		
S40 2.5L	05 /	**N/D**		**PD/796**		
S40 1.6D	01-04 /	**PD/767**	Teves			
S40 1.6i	01-04 /	**PD/767**	Teves			
S40 1.8i	01-04 /	**PD/767**	Teves			
S40 2.0D	01-04 /	**PD/767**	Teves			
S40 2.4i	01-04 /	**PD/767**	Teves			
S40 278mm Brake Rotors	08 / 10	**PD/767**	Teves			
S40 305mm Brake Rotors	08 / 10	**PD/767**	Teves			
S40 SEDAN 1.6I 16V	07-95 /	**PD/1442**	Girling			
S40 SEDAN 1.8I 16V	07-95 /	**PD/1442**	Girling			
S40 SEDAN 1.9 DI	07-95 /	**PD/1442**	Girling			
S40 SEDAN 2.0I 16V	07-95 /	**PD/1442**	Girling			
S40 SEDAN 2.0I T	07-95 /	**PD/1442**	Girling			
S40 SEDAN I T4	07-95 /	**PD/1442**	Girling			
S40 SEDAN TD	07-95 /	**PD/1442**	Girling			
S60 2.0L / 2.3L / 2.4L	01 / 04	**PD/786**		**PD/1051**		
S60 2.4L / 2.5L	05 / 08	**PD/786**				
S60 2.0 T5	10 /			**PD/1453**		
S60 3.0 T6 AWD	10 /			**PD/1453**		
S70 2.3L / 2.4L	99 / 00	**PD/783**				
S80 LS	04 / 06	**PD/786**		**PD/1051**		
S80 LS 2.5L	99 / 03	**PD/786**		**PD/1051**		
S80 1.6	09 /	**PD/1301**				
S80 2.0	07 /	**PD/1301**				
S80 2.4	06 /	**PD/1301**				
V40 SW 2.0I 16V	07-95 /	**PD/1442**	Girling			
V40 SW 1.6I 16V	07-95 /	**PD/1442**	Girling			
V40 SW 1.8I 16V	07-95 /	**PD/1442**	Girling			
V40 SW 1.9 DI	07-95 /	**PD/1442**	Girling			
V40 SW 1.9 TD	07-95 /	**PD/1442**	Girling			
V40 SW 1.9I T4	07-95 /	**PD/1442**	Girling			
V40 SW 2.0I T	07-95	**PD/1442**	Girling			
V40 TURBO 2.0L	00 / 04	**PD/1053**		**PD/1054**		
V50 2.5L	05 / 07	**PD/767**	Teves	**PD/796**		
V50 278mm Brake Rotors	08 / 10	**PD/767**	Teves			
V50 305mm Brake Rotors	08 / 10	**PD/767**	Teves			
V50 STATION WAGON 1.6	01-04 /	**PD/767**	Teves			
V50 STATION WAGON 1.6D	01-04 /	**PD/767**	Teves			

MODEL / *MODELO*	YEAR - *AÑO*	FRONT *DELANTERA*	SYSTEM *SISTEMA*	REAR *TRASERA*	SYSTEM *SISTEMA*	OBS.
VOLVO						
V50 STATION WAGON 1.8i	01-04 /	**PD/767**	Teves			
V50 STATION WAGON 2.0D	01-04 /	**PD/767**	Teves			
V50 STATION WAGON 2.4i	01-04 /	**PD/767**	Teves			
V60 2.0 T5	10 /			**PD/1453**		
V60 3.0 T6 AWD	10 /			**PD/1453**		
V70 2.3L / 2.4L	00 /	**PD/783**				
V70 2.4L / 2.5L	99 / 00	**PD/783**				
V70 XC / TS 2.4L	01 / 03	**PD/786**		**PD/1051**		
VM 17	03 /	**PD/131**	Wabco			
VM 23	03 /	**PD/131**	Wabco			
VM-17 4x2	03 /	**PD/131**	Wabco	**VV/306**	Master	
VM-17 4x2 (Lixo)	03 /	**PD/131**	Wabco	**VV/307**	Master	
VM-17 4x2 (GARBAGE)	03 /	**PD/131**	Wabco	**VV/307**	Master	
VM-210 4x2 17-ton.	03 /	**PD/131**	Wabco	**VV/306**	Master	
VM-210 4x2 17-ton. (Heavy Duty)	03 /	**PD/131**	Wabco	**VV/307**	Master	
VM-210 6x2 23-ton.	03 /	**PD/131**	Wabco	**VV/306**	Master	3° eixo **VV/306**
VM-23 6x2	03 /	**PD/131**	Wabco	**VV/306**	Master	3° eixo **VV/306**
VM-240	03 /	**PD/131**	Wabco	**VV/306**	Master	3° eixo **VV/306**
VM-260 4x2 17-ton.	03 /	**PD/131**	Wabco	**VV/306**	Master	
VM-260 4x2 17-ton. (Heavy Duty)	03 /	**PD/131**	Wabco	**VV/307**	Master	
VM-260 6x2 23-ton.	03 /	**PD/131**	Wabco	**VV/306**	Master	3° eixo **VV/306**
VM-260 6x4 23-ton.	06 /	**VV/308**	Master	**VV/306**	Master	3° eixo **VV/306**
VM-310R 6x4 23-ton.	06 /	**VV/308**	Master	**VV/306**	Master	3° eixo **VV/306**
VM-310T 4x2 43-ton.	06 /	**VV/308** **PD/529**	Master Meritor	**VV/306** **PD/529**	Master Meritor	
XC60	10 /	**PD/1459**	Ate			
XC60 2.0 T5	10 /			**PD/1453**		
XC60 3.0 T6	08 /			**PD/1453**		
XC70 2.5L	04 / 07	**PD/786**		**PD/1051**		
XC90 2.5L / 2.9L	04 / 07	**PD/1063**		**PD/1062**		
VOLVO TRUCKS						
4x2 Models with 6,5 tons of axle load	09-85 /	**19941 00**		**19071 00**		Z-Cam Brake
4x2 Models with 7 /5/8 /0 tons of axle load	09-85 /	**19090 00**		**19071 00**		Z-Cam Brake
6x2 & 6x2/2/4 Models with 6,5 tons of axle load	09-85 /	**19941 00**		**19071 00**		Z-Cam Brake 17992 00 2nd rear axle
6x2 & 6x2/2/4 Models with 7 /5/8 /0 tons of axle load	09-85 /	**19090 00**		**19071 00**		Z-Cam Brake 17992 00 2nd rear axle
6x2 Models with 6 /5 tons axle load Air Suspension & S-Ride	09-85 /	**19090 00**		**19071 00**		Z-Cam Brake 17992 00 2nd rear axle
6x2 Models with 7 /5/8 /0 tons axle load Air Suspension & S-Ride	09-85 /	**19090 00**		**19090 00**		Z-Cam Brake 17992 00 2nd rear axle
6x4 Models (FAT 6.5) T-Ride (20 tons axle)	09-85 /	**19941 00**		**19090 00**		19090 00 2nd rear axle
6x4 Models (FAT 6.5) T-Ride (26 tons axle)	09-85 /	**19941 00**		**19071 00**		19071 00 2nd rear axle
6x4 Models (FAT 7.5) T-Ride (20 tons axle)	09-85 /	**19090 00**		**19090 00**		19090 00 2nd rear axle
6x4 Models (FAT 7.5) T-Ride (26 tons axle)	09-85 /	**19090 00**		**19071 00**		19071 00 2nd rear axle
8x4 Models	09-85 /	**19941 00**		**19068 00**		19941 00 2nd front axle 17992 00 2nd rear axle
8x4 T-Ride Models	09-85 /	**19941 00**		**19068 00**		19090 00 1st & 2nd rear axle
F 12 / F 16 4x2 (17-18 tons)	01-87 / 12-94	**19090 00**		**19068 00**		6 /5 tons front axle load
F 12 / F 16 4x2 (17-18 tons)	01-87 / 12-94	**19071 00**		**19068 00**		7 /5/8 /0 tons front axle load
F 12 / F 16 6x2 (24-25 tons)	01-87 / 12-94	**19090 00**		**19068 00**		6 /5 tons front axle load 17992 00 or 19941 00 auxiliary axle

MODEL / *MODELO*	YEAR - *AÑO*	FRONT *DELANTERA*	SYSTEM *SISTEMA*	REAR *TRASERA*	SYSTEM *SISTEMA*	OBS.
VOLVO TRUCKS						
F 12 / F 16 6x2 (24-25 tons)	01-87 / 12-94	**19071 00**		**19068 00**		7 /5/8 /0 tons front axle load 17992 00 or 19941 00 auxiliary axle
F 12 / F 16 6x4 (24 tons)	01-87 / 12-94	**19090 00**		**19071 00**		6 /5 tons front axle load
F 12 / F 16 6x4 (24 tons)	01-87 / 12-94	**19071 00**		**19071 00**		7 /5/8 /0 tons front axle load
F 12 / F 16 8x2	86 /	**19941 00**		**19068 00**		13 tons front axle load 17992 00 or 19941 00 auxiliary axle
F 12 / F 16 8x2	86 /	**19090 00**		**19068 00**		15 tons front axle load 17992 00 or 19941 00 auxiliary axle
F 12 Intercooler 4x2 FAT 6.5	80 / 83	**19560/561 00**		**19799/800 00**		
F 12 Intercooler 4x2 FAT 6.5	83 / 85	**19560/561 00**		**19885/886 00**		
F 12 Intercooler 4x2 FAT 7.5	80 / 83	**19467/468 00**		**19799/800 00**		
F 12 Intercooler 4x2 FAT 7.5	83 / 85	**19467/468 00**		**19885/886 00**		
F 12 Intercooler 6x2 FAT 6.5	80 / 83	**19560/561 00**		**19799/800 00**		17664/665 00 3th axle
F 12 Intercooler 6x2 FAT 6.5	83 / 85	**19560/561 00**		**19885/886 00**		17664/665 00 3th axle
F 12 Intercooler 6x2 FAT 7.5 - 38 tons	80 / 83	**19467/468 00**		**19799/800 00**		17664/665 00 3th axle
F 12 Intercooler 6x2 FAT 7.5 - 38 tons	83 / 85	**19467/468 00**		**19885/886 00**		17664/665 00 3th axle
F 615 /S	79 /	**19384/385 00**		**19384/385 00**		
F 616 / S	80 /	**19384/385 00**		**19384/385 00**		
F 617 / S	80 /	**19384/385 00**		**19384/385 00**		
F10-260 4x2	02-82 / 06-85	**19938 00**		**19939 00**		
F10-260 6x2	02-82 / 06-85	**19938 00**		**19939 00**		
F10-260 6x4	02-82 / 06-85	**19938 00**		**19939 00**		
F10-280 4x2	08-77 / 02-82	**19938 00**		**19939 00**		
F10-280 6x2	08-77 / 02-82	**19938 00**		**19939 00**		
F10-280 6x4	08-77 / 02-82	**19938 00**		**19939 00**		
F10-300 4x2	10-83 / 12-87	**19938 00**		**19939 00**		
F10-300 6x2	10-83 / 12-87	**19938 00**		**19939 00**		
F10-300 6x4	10-83 / 12-87	**19938 00**		**19939 00**		
F10-320 4x2	10-87 / 12-94	**19938 00**		**19939 00**		
F10-320 6x2	10-87 / 12-94	**19938 00**		**19939 00**		
F10-320 6x4	10-87 / 12-94	**19938 00**		**19939 00**		
F7	78 / 85	**19384/385 00**		**19384/385 00**		with ROR brakes
F7	77 / 84	**17664/665 00**		**19467/468 00**		5 ton front axle - 7" rear brake 17664/665 00 boogie axle
F7	77 / 84	**19560/561 00**		**19562/563 00**		6,5 ton front axle - 8" rear brake 17664/665 00 boogie axle
FH12 6x2 with pneumatic cushion in the back	93 /	**19090 00**		**19071 00**		19941 00 aux. axle 7 /5 tons axle load 19071 00 aux. axle 9 /5 tons axle load
FH12 6x2 with pneumatic cushion in the back	93 /	**19071 00**		**19068 00**		19941 00 aux. axle 7 /5 tons axle load 19071 00 aux. axle 9 /5 tons axle load
FH12-340	08-93 /	**19090 00**		**19071 00**		17992 00 or 19071 00 auxiliary axle
FH12-340	08-93 /	**19071 00**		**19068 00**		17992 00 or 19071 00 auxiliary axle
FH12-380	08-93 /	**19090 00**		**19071 00**		17992 00 or 19071 00 auxiliary axle
FH12-380	08-93 /	**19071 00**		**19068 00**		17992 00 or 19071 00 auxiliary axle
FH12-420	08-93 /	**19090 00**		**19071 00**		17992 00 or 19071 00 auxiliary axle
FH12-420	08-93 /	**19071 00**		**19068 00**		17992 00 or 19071 00 auxiliary axle
FH12-460	08-93 /	**19090 00**		**19071 00**		17992 00 or 19071 00 auxiliary axle
FH12-460	08-93 /	**19071 00**		**19068 00**		17992 00 or 19071 00 auxiliary axle
FH12-520	08-93 /	**19090 00**		**19071 00**		17992 00 or 19071 00 auxiliary axle

MODEL / *MODELO*	YEAR - *AÑO*	FRONT *DELANTERA*	SYSTEM *SISTEMA*	REAR *TRASERA*	SYSTEM *SISTEMA*	OBS.
VOLVO TRUCKS						
FH12-520	08-93 /	**19071 00**		**19068 00**		17992 00 or 19071 00 auxiliary axle
FH16 6x2 with pneumatic cushion in the back	93 /	**19090 00**		**19071 00**		19941 00 aux. axle 7 /5 tons axle load 19071 00 aux. axle 9 /5 tons axle load
FH16 6x2 with pneumatic cushion in the back	93 /	**19071 00**		**19068 00**		19941 00 aux. axle 7 /5 tons axle load 19071 00 aux. axle 9 /5 tons axle load
FH16-470	93 / 02	**19938 00**		**19939 00**		
FH16-520	93 / 02	**19938 00**		**19939 00**		
FL 614 (Platform Chassis)	94 / 04-00	**19384/385 00**		**19384/385 00**		
FL 615	86 / 89	**19384/385 00**		**19384/385 00**		
FL 616	86 / 89	**19384/385 00**		**19384/385 00**		
FL 617	86 / 89	**19384/385 00**		**19384/385 00**		
FL10-275 4x2	12-95 / 09-98	**19938 00**				
FL10-275 6x2	12-95 / 09-98	**19938 00**				
FL10-320 4x2	12-95 / 09-98	**19938 00**				
FL10-320 6x2	12-95 / 09-98	**19938 00**		**19939 00**		
FL10-320 6x4	12-95 / 09-98	**19938 00**		**19939 00**		
FL10-320 8x2	12-95 / 09-98	**19938 00**		**19939 00**		
FL10-360 4x2	12-95 / 09-98	**19938 00**				
FL10-360 6x2	12-95 / 09-98	**19938 00**				
FL10-360 6x4	12-95 / 09-98	**19938 00**				
FL10-360 8x2	12-95 / 09-98	**19938 00**				
FL7-230	85 / 98	**19938 00**		**19939 00**		
FL7-260	91 / 98	**19938 00**				
FL7-286	93 / 98	**19938 00**				
FM12-340	98 / 05	**19938 00**				
FM12-379	98 / 05	**19938 00**		**19940 00**		
N 10 MK2	80 /	**19467/468 00**				17664/665 00 trailer axle
N 12 MK2	80 /	**19467/468 00**		**19562/563 00**		17664/665 00 trailer axle
N 7 MK2	80 /	**19467/468 00**		**19562/563 00**		17664/665 00 trailer axle
VOLVO BUSES						
B 10 B	92 /	**19562/563 00**		**19799/800 00**		S-Cam Brake
B 10 B	92 /	**19071 00**		**19068 00**		Z-Cam Brake
B 10 H	79 /	**19562/563 00**		**19799/800 00**		
B 10 L	95 /			**19068 00**		Z-Cam Brake
B 10 M	79 /	**19562/563 00**		**19799/800 00**		
B 10 M DL	93 /	**19562/563 00**		**19799/800 00**		
B 10 M GLE	93 /	**19562/563 00**		**19799/800 00**		
B 10 M SE / GL	96 /	**19562/563 00**		**19799/800 00**		
B 10 MD	79 /	**19562/563 00**		**19799/800 00**		
B 10 MT	96 /	**19562/563 00**		**19799/800 00**		
B 10 R	79 /	**19562/563 00**		**19799/800 00**		
B 12	86 /	**19071 00**		**19068 00**		Z-Cam Brake
B 12 L	95 /			**19068 00**		
B 12-396	01-92 /			**19940 00**		
B 6 / FA	83 / 85	**19384/385 00**		**19384/385 00**		
B 7	87 /	**19071 00**		**19068 00**		
B 7	87 /	**19941 00**		**19090 00**		
B 7	87 /	**19562/563 00**		**19799/800 00**		Chassis 30000 / ...
B 9 M	83 / 96	**19560/561 00**		**19562/563 00**		
B 9 M	96 /	**19562/563 00**		**19799/800 00**		
Olympian MK2	93 /	**19090 00**		**19068 00**		19090 00 auxiliary axle

MODEL / *MODELO*	YEAR - *AÑO*	FRONT *DELANTERA*	SYSTEM *SISTEMA*	REAR *TRASERA*	SYSTEM *SISTEMA*	OBS.
WABCO						
229 G				**4633-A**		VF-49640A
W-22				**4375**		AD-3395
W-22				**4462-A**		AD-5211 AD-5210
W-23				**4375**		AD-3395
W-23				**4462-A**		AD-5211 AD-5210
W-35 C				**4375**		AD-3395
W-35 C				**4462-A**		AD-5211 AD-5210
WARSTEIN						
300 x 150 / 0 mm				**19573 00**		
300 x 200 / 0 mm				**19574 00**		
360 x 160 / 0 mm				**19952/ 953 00**		
360 x 200 / 0 mm				**19902/ 903 00**		
420 x 160 / 0 mm				**19200 00**		
420 x 180 / 0 mm				**19032 00**		
420 x 200 / 0 mm				**19094 00**		
420 x 220 / 0 mm				**19591 00** **19825 00**		
YORK TRAILERS						
419 x 178 / 0 mm				**19036/ 037 00**		
419 x 219 / 0 mm				**19369/ 370 00**		
YUTONG						
ONIBUS ZK6119H	10 /	**PD/ 187**	ROR			
ONIBUS ZK6908HNAA		**PD/170**	Haldex	**PD/170**	Haldex	
ZANELLO (OMNIBUS)						
URBANO	89 /	**9534**		**9535**		

FRAS-LE®



Brake Linings in Sets

Guarniciones para Frenos en Juegos

FRAS-LE	BFMC	WVA	FMSI	LonaFlex.					#	T		WI - ID	
AC/10			4716	L-911	381.00	10-A	152.40	22.20/14.00	10	10-10	08	No	Eaton
AC/11			4717	L-912	381.00	14-F	219.10	22.20/14.00	14	10-10	08	No	Eaton
AC/16					341.00	10-B/10-B	195.00	19.00-13.00/16.50-19.10	10/10	1/4R	04+04	No	
AC/17					419.00	16-B/16-B	177.80	18.80-14.90/18.70-10.20	16/16	10-10	04+04	No	El Detalle
AC/18					419.00	16-B/16-B	203.20	18.20-14.30/187.10-9.60	16/16	10-10	04+04	No	El Detalle
AC/30					419.00	12-C/12-C	177.80	18.90-15.40/18.80-10.30	12/12	10-10	04+04	Optional	El Detalle
CA/32				L-638	419.00	16-B/16-B	203.20	18.10-9.60/18.20-14.30	16/16	10-10	04+04	Optional	Guerra, Iveco, Randon
CA/33				L-636	419.00	16-B/16-B	203.20	21.00-10.30/21.10-16.60	16/16	10-10	04+04	Yes/Si	Guerra, Randon
CA/36				L-635	419.00	16-B/16-B	254.00	21.00-10.20/21.10-16.50	16/16	10-10	04+04	Yes/Si	Randon
CA/32-A					419.00	16-B/16-B/16-L	203.20	18.10-9.60/18.20-14.30	16/16/16	10-10	04+02+02	Optional	Iveco
CB/36				L-361	381.00	14-A	114.30	9.50	14	07-08	04	No	GM
CB/38				L-489	222.00	10-A/10-A	44.50	5.20	10/10	04-04	02+02	No	GM
CB/39				L-490	222.00	10-A/10-A	57.20	5.20	10/10	04-04	02+02	No	Ford, GM
CB/40			1405	L-117	200.00	10-A	45.00	4.80	10	04-04	04	No	GM
CB/41				L-245	200.00	10-A	45.00	4.80	10	04-04	04	No	Chrysler, Ford, GM
CB/42				L-538	229.00	08-A/10-A	45.00	4.80	08/10	04-04	02+02	No	GM
CB/43				L-526	203.00	10-A/14-A	45.00	4.80	10/14	04-04	02+02	No	GM
CB/47				L-653	203.00	14-A	45.00	4.80	14	04-04	04	No	GM
CB/48				L-654	229.00	10-A	45.00	4.80	10	04-04	04	No	GM
CB/49				L-228	200.00	10-K	27.50	4.70	10		04	No	GM
CB/51				L-561	280.00	08-A/10-A	63.50	4.50/5.80-5.00	08/10	04-05	02+02	No	GM
CB/52				L-557	305.00	10-A/10-A	63.00	4.80/6.00	10/10	04-05	02+02	No	GM
CB/53				L-142	394.00	08-A	107.90	19.10/12.40	08	10-10	08	No	GM
CB/54				L-144	394.00	08-A	152.40	19.10/12.40	08	10-10	08	No	GM
CB/55				L-145	200.00	10-K/10-K	27.50	4.70	10/10		02+02	No	GM
DF/235	DF/44/45/1	19010/011 00		L-836	420.00	08-A/08-A	150.00	21.00-12.70/21.10-17.60	08/08	10-10	04+04	Yes/Si	DAF
DK/44				L-184	230.00	10-A	50.00	5.00	10		04	No	
DK/45				L-120	230.00	10-A	50.00	5.00	10		04	No	
F/724	NN/63/1			L-743	412.00	12-G	216.00	15.50	12	10-10	08	Yes/Si	Denning, Hino Bus
F/725				L-744	410.00	12-G	140.00	14.00	08	10-10	08	Yes/Si	Isuzu
F/726				L-745	311.20	01-SF	125.00	9.50			04	Yes/Si	Trailer Axles
F/727				L-746	311.00	01-SF	190.00	12.70			04	No	Allison Trailers
F/746				L-747	180.00	08-A	40.00	5.00	08		04	No	Renault
F/747			1416		320.00	10-A	75.00	8.00	10		04	Optional	
F/755				L-400	320.00	14-A	100.00	11.00	14		04	Yes/Si	Hino Commercial
F/756				L-401	320.00	14-A	115.00	11.00	14		04	Yes/Si	Hino Commercial
F/757				L-748	294.40	10-B/10-B	200.00	19.50-15.00/19.30-8.00	12/12		04+04	No	Fruehauf
F/761	FI/120/121/1	17924/925 91			325.00	12-A/14-A	100.00	11.70	12/14		04	Yes/Si	Iveco
F/762	SY/20/2/26/1	17635/636 01		L-1065	325.00	12-A/14-A	120.00	12.20	12/14		04	Yes/Si	Iveco
F/763			1482	L-402	325.00	12-A	100.00	11.20	12		04	Yes/Si	Isuzu
F/764		17413 00	1534	L-403	325.00	16-I	120.00	11.00	16		04	Yes/Si	Isuzu
F/765				L-749	325.00	12-A	109.50	9.50	12		04	Optional	Mitsubishi
F/766			1467	L-404	325.00	12-A	74.50	9.50	12		04	No	Mitsubishi
F/767			1478	L-750	320.00	12-A	90.00	10.00	12		04	No	Mitsubishi
F/768		17945/946 00		L-751	304.00	14-A/16-A	101.60	6.00/7.50	14/16		02+02	No	Nissan
F/772				L-752	358.00	01-SF	210.00	18.40-10.00/18.40-15.60			04+04	Yes/Si	York
F/781			1471	L-777	400.00	10-O	102.00	15.00	10		08	Yes/Si	Hino Commercial
F/782			1331-A	L-778	400.00	10-P	130.00	15.00	10		08	Yes/Si	Hino Commercial
F/783			1422	L-779	400.00	10-O	120.00	15.00	08		08	Yes/Si	Hino Bus, International, Mitsubishi, U.D.
F/784			1419	L-780	400.00	12-B	154.00	15.00	12		08	Yes/Si	Hino Bus, International, Mitsubishi, U.D.
F/786				L-754	410.00	17-C	220.00	16.00	17		08	Yes/Si	Isuzu
F/787	CB/31/1 F			L-781	410.00	14-B	148.50	14.80	14		08	Yes/Si	Nissan / U.D.
F/788	CB/31/1 R			L-756	410.00	15-B	220.00	16.00	15		08	Yes/Si	Nissan / U.D.
F/803		19139 00		L-757	402.00	10-N	150.00	16.00	10		08	Yes/Si	Nissan / U.D , Golden Dragon
F/804		19138 00	4747	L-758	412.00	15-B	220.00	16.00	15		08	Yes/Si	Nissan / U.D , Golden Dragon
F/815					419.00	14-E/14-E	177.80	18.20-14.30 / 18.10-9.60	14/14		04+04	Optional	
F/818				L-793	410.00	17-C	220.00	18.75	17		08	Yes/Si	Daewoo
F/819				L-794	410.00	12-J	155.00	18.30	12		08	Yes/Si	Daewoo

FRAS-LE	BFMC	WVA	FMSI	LonaFlex.					#	T		WI - ID	
F/820				L-795	440.00	13-C/13-C	220.00	17.50-11.20/18.50-17.50	13/13		04+04	Yes/Si	Hyundai
F/822				L-796	440.00	13-C/13-C	207.00	17.50-11.20/18.50-17.50	13/13		04+04	Yes/Si	Hyundai
F/824				L-797	440.00	10-N/10-S	156.00	17.50-11.20/18.50-17.50	10/10		04+04	Yes/Si	Hyundai
F/833				L-759	410.00	10-A	155.00	15.00	10		08	Yes/Si	Daewoo, Hyundai
F/834				L-760	410.00	16-K	203.20	15.00	16		08	Yes/Si	Daewoo
F/835				L-761	410.00	16-J	220.00	16.00	16		08	Yes/Si	Mitsubishi, Hyundai
F/836			1418-A	L-787	410.00	10-A	140.00	15.00	10		08	Yes/Si	Mitsubishi, Hyundai
F/837			4738	L-788	410.00	14-K	200.00	15.00	14		08	Yes/Si	Mitsubishi, Hyundai
F/886					229.00	01-SF	44.50	6.0 / 3.0			02+02	Yes/Si	FORD
F/923				L-798	410.00	08-A	148.00	15.50	08		08	Yes/Si	
F/924				L-799	414.00	12-G	217.00	16.50	12		08	Yes/Si	Tianjin
F/925		17406 00	1490	L-800	400.00	06-A	130.00	15.00	06		08	No	Yutong
F/926		19086 00		L-801	400.00	06-A	155.00	15.00	06		08	Yes	Yutong
F/927				L-809	410.00	12-G	152.00	15.00	12		08	Yes/Si	Nissan
F/928				L-810	416.00	15-D	219.00	15.80	15		08	Yes/Si	
F/935				L-802	412.00	12-G	152.00	15.50	12		08	Yes/Si	Hino
F/936		19132 00		L-803	412.00	12-G	216.00	15.50	12		08	Yes/Si	Hino
F/937			4741	L-804	412.00	15-D	220.00	15.60	15		08	Yes/Si	Nissan / U.D.
F/938		19691 00		L-805	412.00	10-N	150.00	15.60	10		08	Yes/Si	Nissan / U.D.
F/939			4739	L-806	412.00	10-A	150.00	15.60	10		08	Yes/Si	Mitsubishi
F/940				L-807	410.00	12-G	150.00	15.00	12		08	Yes/Si	Hino
F/941				L-808	412.00	10-A	150.00	15.60	10		08	Yes/Si	Hino
F/943					323.00	01-SF	90.00	11,500	12			No	
F/949				L-963	325.00	06-A	120.00	15.88 -8.00	06		04+04	optional	
F/951					416.80	12-J	155.50	20.40	12			optional	
F/955				L-964	418.60	16-B/16-B	178.00	15.30	16		04+04	optional	
F/957					400.00	12-M	200.00	14.50	12		08	optional	
F/969					408.00	14-C	160.00	15.00	14		08	No	
F/1072					420.00	10-A	180.00	17.80/11.00	10	08X15	08	Yes/Si	
F/1073					320.00	06-A	130.00	11.50	06		08	Yes	Nissan UD
F/1088					410.00	14-O	220.00	16.00	14		08	Optional	
F/1089			4435		322.00	01-SF	114.30	11.00			04	No	Hino
F/1090					322.00	01-SF	88.90	11.00			04	No	Hino
F/1091					325.00	01-SF	114.30	12.50			04	No	Hino
F/1092					325.00	01-SF	146.00	12.50			04	No	Hino
F/1093	NN/46		1334		322.40	01-SF	100.00	11.20			04	No	Hino
F/1096		19128 00		L-1069	406.00	12-G	151.50	15.50	12		08	Yes	Hino
F/1101					358.00	01-SF	160.00	18.40-10.00/18.40-15.60			04+04	Yes/Si	York
F/1119					320.00	10-A	75.00	9.80	10		04	No	Isuzu
F/1120					410.00	16-B	220.00	187.05	16		08	Yes	Daewoo Bus
F/1121	NN/100/1			L-1060	413.00	17-D	176.00	16.60	17		08	Yes	Nissan
F/1122	NN/101/1			L-1061	413.00	17-D	216.00	16.60	17		08	Yes	Nissan
F/1123					438.00	10-D	158.00	17.00-13.00	10		08	Yes	Tata
F/1124					438.00	10-D	178.00	17.00-13.00	10		08	Yes	Tata
F/1128					420.00	10-A	180.00	17.80/11.00	10	08X15	08	Yes/Si	
F/1131					410.00	17-C	220.00	16.00	17		08	Yes	Isuzu
F/1132					310.00	01-SF	88.90	8.00			04	No	NPR, Hyundai
F/1133					310.00	01-SF	101.60	8.00			04	No	NPR, Hyundai
F/1137					408.00	01-SF	178.00	15.50			08	No	Isuzu
F/1138					320.00	01-SF	135.70	11.60			04	No	Nissan
F/1139					323.00	01-SF	90.00	8.20			04	No	Toyota
F/1140					416.00	01-SF	177.80	17.80			08	No	
F/1156				L-1068	320.00	12-B	143.00	13.00	12		08	Yes	Hino
FD/58				L-562	325.00	08-A/08-A	100.00	15.90-8.00/16.00-12.80	08/08	10-8	04+04	Yes/Si	Agrale, Volkswagen
FD/59				L-559	325.00	08-B/08-N	120.00	15.90-8.00/16.00-12.80	08/08	10-8	04+04	Yes/Si	Agrale, Volkswagen
FD/65				L-625	180.00	08-A	40.00	4.50	08	04-05	04	No	Ford
FD/66				L-620	180.00	08-A	40.00	4.80	08	04-05	04	No	Ford
FD/68				L-528	280.00	08-A/10-A	50.80	5.20/6.00-5.20	08/10	04-05	02+02	No	Ford
FD/71				L-535	330.00	10-A/12-A	76.20	6.40/7.60-7.20	10/12	07-06	02+02	No	Agrle, Ford

FRAS-LE	BFMC	WVA	FMSI	LonaFlex.					#	T		WI - ID	
FD/72				L-577	330.00	10-A/12-A	88.90	6.40/6.80-6.40	10/12	07-06	02+02	No	Agrale, Chrysler, Ford, GM, Marcopolo
FD/73				L-534	330.00	10-A/12-A	76.20	6.40	10/12	07-06	02+02	No	Chrysler, Ford
FD/74				L-523	356.00	10-A/12-A	76.20	6.40	10/12	07-06	02+02	No	Ford, GM
FD/75				L-524	381.00	14-A	127.00	12.70	14	07-08	04	No	Ford, GM
FD/76				L-488	406.00	14-A	76.20	8.70	14	07-09	04	No	Ford
FD/77				L-219	325.00	06-A/06-A	99.00	13.90-6.50/14.10-11.40	06/06	10-08	04+04	Yes/Si	Agrale, Ford, Marcopolo, Volkswagen
FD/78				L-658	305.00	12-A/14-A	76.20	4.80/6.40	12/14	04-05	02+02	No	Ford
FD/80				L-661	394.00	06-A/06-A	127.00	12.70	06/06	10-	04+04	No	Ford, Volkswagen
FD/81				L-637	381.00	14-E	219.60	18.30/11.60	14	10-10	08	No	Guerra
FD/82				L-655	381.00	14-A	101.60	12.70	14	07-07	04	No	GM
FD/83			4693	L-728	381.00	08-A	101.60	18.30/11.60	08	10-10	08	Yes/Si	Ford, GM, Volkswagen
FD/84				L-220	381.00	14-E	177.80	18.30/11.60	14	10-10	08	Yes/Si	Ford, GM, Volkswagen
FD/85				L-221	381.00	08-A	152.40	18.30/11.60	08	10-10	08	Yes/Si	Ford, GM
FD/86			4702	L-222	381.00	08-A/08-A	101.60	18.70-9.60/18.80-14.70	08/08	10-10	04+04	Yes/Si	Ford, GM, Iveco, Volkswagen
FD/87			4704	L-223	381.00	12-A/12-A	152.40	18.70-9.60/18.80-14.70	12/12	10-10	04+04	Yes/Si	Ford, Iveco, Volkswagen
FD/88			4705	L-224	381.00	14-E/14-E	177.80	18.70-9.60/18.80-14.70	14/14	10-10	04+04	Yes/Si	Ford, Guerra, Iveco, Randon, Volkswagen
FD/89			4706	L-966	381.00	16-B/16-B	203.20	18.70-9.60/18.80-14.70	16/16	10-10	04+04	Yes/Si	Rockwell
FD/165				L-1059	325.00	10-Q/10-R	150.00	15.90-8.00/16.00-12.80	10/10	10-08	04+04	Yes	Ford
FD/61-S/F				L-762	180.00	01-SF	30.00	6.00/3.00			02+02	No	Ford, GM
FD/63-S/F				L-556	203.00	01-SF	36.30	6.10/3.20			02+02	No	Ford, Volkswagen
FD/64-S/F				L-726	180.00	01-SF	30.00	5.00/3.00			02+02	No	Ford, Volkswagen
FD/98-S/F				L-764	202.20	01-SF	35.90	4,500			04	No	Ford
FI/90				L-550	185.00	08-A	30.00	5.00	08		04	No	Fiat
FI/92				L-671	325.00	12-A/14-A	100.00	8.00	12/14	10-	02+02	No	Fiat
FI/93				L-623	330.00	12-A/14-A	101.60	9.50	08/14	10-	02+02	No	Fiat
FI/115	FI/86/1	17481 00		L-970	420.00	16-A	125.00	12.00	16	13-	04	No	Fiat
FI/117				L-627	394.00	08-A/08-A	152.40	12.70	08/08	10-	04+04	No	Fiat, Volkswagen
FI/119				L-226	394.00	12-A/12-A	152.40	20.20-14.30/20.20-17.60	12/12	10-10	04+04	No	Volkswagen
FI/91-S/F				L-555	228.00	01-SF	40.00	4.50			04	No	Fiat
FI/96-S/F				L-558-S/F	180.00	01-SF	30.00	4.50			04	No	Fiat
FI/97-S/F				L-763	184.8	01-SF	27.40	4.10			04	No	Fiat
FN/106				L-104-A	429.00	16-F	90.00	12.00	16	13-14	04	No	FNM
FN/107				L-103-A	429.00	28-A	140.00	12.00	28	13-14	04	No	FNM
IV/158	PB/23/26/1	17096/099 00		L-736	310.00	12-A/14-H	100.00	12.60	12/14		02+02	No	Iveco
IV/159	RW/29/1/2	19553/554 00		L-1062	410.00	12-K/12-L	199.60	21.20/12.50	12	08x15	06+02	Yes/Si	ERF, Iveco, Meritor, Rockwell
IV/160	RW/29/32/33/1	19716 00		L-988	410.00	12-K/12-L/12-L	199.60	22.10-11.90/22.20-13.90/21.20-12.50	12/12/12	08x15	02+02+04	Yes/Si	ERF, Iveco, Meritor, Rockwell
IV/161	RW/28/1/2	19555/556 00		L-1063	410.00	12-K/12-L	180.00	21.20/12.50	12	08x15	02+06	Yes/Si	Iveco, Meritor, Rockwell
IV/164	RW/38/39/1	19116/119 00		L-1052	410.00	12-K/12-L	199.60	21.96-15.60/21.60-13.70	12		04+04	Yes/Si	Iveco
LD/123-S/F				L-215	250.00	01-SF	50.00	5.00			04	No	Lada
LD/124-S/F				L-216	200.00	01-SF	40.00	5.00			04	No	Lada
MB/140	MB/68/1	17298 00	1310	L-874	418.00	08-A	120.00	15.00	08	08x15	08	Optional	Auwarter, Mercedes-Benz
MB/141					419.00	08-A	127.00	18.20-14.30/18.10-9.60	08		04+04	No	Mercedes-Benz
MB/142					419.00	08-A	152.40	18.20-14.30/18.10-9.60	08		04+04	No	Mercedes-Benz
MB/145	MB/82/83/1	17795/796 00		L-1006	410.00	08-A/10-A	140.00	17.60-7.80/17.70-15.20	10/08	08x15	04+04	Yes/Si	Mercedes-Benz
MB/146					410.00	08-B/10-C	160.00	17.60-7.80/17.70-15.20	08/10	08x15	04+04	Yes/Si	Mercedes-Benz
MB/155	MB/20/1	15090 00		L-114	400.00	14-A	60.00	6.50	14	07-06	04	No	Mercedes-Benz
MB/157				L-115	280.00	08-A/14-A	63.50	5.50/7.00	08/08	04-05	02+02	No	Mercedes-Benz
MB/161	MB/48/1	17059 00	1313	L-101	408.00	08-A	100.00	10.00	08	13-10	08	No	Mercedes-Benz
MB/164	MB/55/1	15123 00	1312	L-102	408.00	08-A	80.00	10.00	08	13-10	08	No	Mercedes-Benz
MB/176	MB/56/2	17259 00	1317	L-348	408.00	08-A	120.00	10.00	08	13-10	08	No	Mercedes-Benz
MB/177	MP/29/1	17682 00	4694	L-652-B	410.00	08-A	120.00	17.30/12.10	08	13-10	08	Yes/Si	Mercedes-Benz
MB/179				L-633	418.00	08-A	130.00	14.80	08	13-10	08	No	Mercedes-Benz
MB/180	MB/65/1	17105 00	1305	L-501	418.00	08-A	140.00	14.80	08	13-10	08	Optional	Mercedes-Benz
MB/181	MB/66/1	19182 00	1304	L-509	418.00	08-B	160.00	14.80	08	13-10	08	Optional	Mercedes-Benz
MB/182			4697	L-652	410.00	08-A	120.00	17.30/12.10	08	13-10	08	Yes/Si	Mercedes-Benz
MB/183	MP/30/1	17683 00	4695	L-651	410.00	08-A	140.00	17.30/12.10	08	08x20	08	Yes/Si	Mercedes-Benz
MB/184	MP/31/1	19486 00	4671	L-552	410.00	08-B	160.00	17.30/12.10	08	08x20	08	Yes/Si	Mercedes-Benz

FRAS-LE	BFMC	WVA	FMSI	LonaFlex.					#			WI - ID	
MB/185	MP/32/1	19487 00		L-551	410.00	08-B	180.00	17.30/12.10	08	08x20	08	Yes/Si	Mercedes-Benz
MB/186	MB/72/73/1	15580/581 96	1320	L-522	300.00	12-A/14-A	98.00	9.80	12/14	06x10	02+02	Optional	Mercedes-Benz
MB/187	MB/94/95/1	15580/581 16		L-522-E	304.00	12-A/14-A	98.00	11.80	12/14	06x10	02+02	Optional	Mercedes-Benz
MB/188	MP/36/1	19488 00	4672	L-227	410.00	08-B	220.00	17.30/12.10	08	08x20	08	Yes/Si	Mercedes-Benz
MB/190	MB/74/75/1	19579/580 00	4656	L-131	410.00	08-B/10-C	160.00	17.70-15.20/17.60-7.80	10/08	08x20	04+04	Yes/Si	Mercedes-Benz
MB/191	MB/76/77/1	19581/582 00	4657	L-133	410.00	08-B/10-C	220.00	17.70-15.20/17.60-7.80	10/08	08x20	04+04	Yes/Si	Mercedes-Benz
MB/193	MB/117/118/2	17351/975 04		L-586	300.00	12-A/14-H	122.00	9.70	12/14	06x12	02+02	Yes/Si	Mercedes-Benz
MB/194				L-511	364.00	08-B	160.00	20.80/15.50	08	06x16	08	Yes/Si	Mercedes-Benz
MB/195				L-512	364.00	08-B	180.00	20.80/15.50	08	06x16	08	Yes/Si	Mercedes-Benz
MB/255	MB/64/1	15057 00		L-569	300.00	10-A	90.00	10.60	10	08x15	04	Optional	Mercedes-Benz
MB/156-S/F				L-118	254.00	01-SF	57.20	4.80			04	No	Mercedes-Benz
MP/410				L-410	410.00	14-E/14-E	180.00	21.00-10.90/21.10-16.90	14/14		04+04	Yes/Si	MAN
MP/411				L-411	410.00	14-E/14-E	220.00	21.00-10.90/21.10-16.90	14/14		04+04	Yes/Si	MAN
RN/209					180.00	08-A	40.00	5.00	08		04	No	Renault
RN/210				L-214	254.00	12-A/12-A	44.50	4.80/7.20-4.80	12/12	ESPECIAL	02+02	No	Renault
RN/212					180.00	01-SF	40.00	5.00	08		04	No	Renault
ST/350	SY/23/31/1	19245/782 00		L-350	420.00	06-A/08-A	160.00	15.00	06/08		04+04	Yes	CNHTC
ST/351	SY/24/1	19246 00		L-351	420.00	08-A	185.00	15.00	08		08	Yes	DAF, Steyer
ST/352				L-352	419.00	14-E/14-E	219.10	21.00 / 10.29 21.11 / 16.56	14 14	10x18	04+04	Yes	CNHTC
SV/222	SV/7/1	15185 00		L-135	413.00	06-A	89.00	19.00	06	10-12	08	No	Scania
SV/223	SV/8/1	19075 00		L-107	413.00	12-B	178.00	19.00	12	10-12	08	Yes/Si	Guerra, Randon, Scania
SV/224	SV/26/1	17161 00		L-311	413.00	08-A	127.00	19.00	08	10-12	08	Yes/Si	Scania
SV/226	SV/27/1	19393 00		L-497	413.00	12-B	203.00	19.00	12	10-12	08	Yes/Si	Guerra, Randon, Scania
SV/227	SV/34/1	19647 00		L-499	413.00	12-B	254.00	19.00	12	10-12	08	Yes/Si	Scania
SV/228	SV/39/2	17991 00		L-307	413.00	08-A	127.00	19.00	08	10-12	04	Yes/Si	Scania
SV/229	SV/40/2	19931 00		L-308	413.00	16-B	178.00	19.00	16	10-12	04	Yes/Si	Scania
SV/230	SV/41/2	19932 00		L-309	413.00	16-B	203.00	19.00	16	10-12	04	Yes/Si	Scania
SV/231	SV/42/2	19933 00		L-310	413.00	16-B	254.00	19.00	16	10-12	04	Yes/Si	Scania
TY/252				L-578	305.00	12-A	57.10	6.40	12	07-05	04	No	Toyota
TY/253				L-700	160.00	08-A	35.00	4.00	08		02	No	Toyota
TY/254				L-701	305.00	12-A	75.00	6.40	12	07-05	04	No	Toyota
VV/248	VL/70/71/1	17664/665 00	4696	L-705	413.00	08-A/10-A	127.00	19.00-11.70/19.00-14.80	10/08		04+04	Optional	Volvo
VV/250	VL/72/73/1	19467/468 00	4663	L-706	394.00	09-A/12-E	177.80	19.00-11.70/19.00-14.80	12/09		04+04	Optional	Volvo
VV/287	VL/74/75/1	19560/561 00	4662	L-811	413.00	10-D/12-F	152.40	19.00-11.70/19.00-14.80	12/10		04+04	Optional	Volvo
VV/288				L-663	394.00	08-C/10-D	152.40	19.00-11.70/19.00-14.80	10/08		04+04	Yes/Si	Volvo
VV/289	VL/76/77/1	19562/563 00	4664	L-664	394.00	09-A/12-E	203.20	19.00-11.70/19.00-14.80	12/09		04+04	Yes/Si	Volvo
VV/290	VL/81/82/1	19799/800 00	4698	L-665	394.00	09-A/12-E	254.00	19.00-11.70/19.00-14.80	12/09		04+04	Yes/Si	Volvo
VV/296	VL/85/1	17992 00		L-709	410.00	08-A	125.00	18.30/12.60	08		08	Yes/Si	Volvo
VV/297	VL/86/1	19941 00		L-713	410.00	12-E	150.00	18.30/12.60	12		08	Optional	Volvo
VV/298	VL/87/1	19938 00		L-710	410.00	12-E	175.00	18.30/12.60	12	10-10	08	Yes/Si	Volvo
VV/299	VL/88/1	19939 00		L-711	410.00	12-E	200.00	18.30/12.60	12	10-10	08	Yes/Si	Volvo
VV/300	VL/89/1	19940 00		L-712	410.00	12-E	225.00	18.30/12.60	12	10-10	08	Yes/Si	Volvo
VV/303	VL/87/2	19090 00		L-733	410.00	14-I	173.20	17.90/12.20	14		08	Yes/Si	Volvo
VV/304	VL/88/2	19071 00		L-734	410.00	14-I	198.20	17.90/12.20	14		08	Yes/Si	Volvo
VV/305	VL/89/2	19068 00		L-735	410.00	14-I	223.20	17.90/12.20	14		08	Optional	Volvo
VV/306			4705	L-224	381.00	14-E/14-E	177.80	18.70-9.60/18.80-14.70	14/14	10-10	04+04	Yes/Si	Volvo
VV/307			4710	L-640	381.00	16-B/16-B	219.10	18.80-14.70/18.70-9.60	16/16	10-10	04+04	Yes/Si	Volvo
VV/308			4704	L-223	381.00	12-A/12-A	152.40	18.70-9.60/18.80-14.70	12/12	10-10	04+04	Yes/Si	Volvo
VV/309	VL/83/84/1	19885/886 00		L-1049	394.00	09-A/12-E	239.50	19.00-11.70/19.00-14.80	12/09	10-10	04+04	Yes/Si	Volvo
VW/255	MP/37/38/1	15817/823 00		L-141	324.00	10-A/12-A	96.50	12.00	10/12	13-	02+02	No	Volkswagen
VW/256				L-540	381.00	12-C	101.60	12.50	12	07-06	08	No	GM, Volkswagen
VW/257				L-541	381.00	12-C	127.00	12.50	12	07-06	08	No	GM, Volkswagen
VW/262	VN/7/1	11268 00	882-A	L-124	230.00	10-A	40.00	4.00	10	11-5	04	No	Volkswagen
VW/264	VN/2/1	10030 00	881	L-123	230.00	08-F	30.20	4.00	08	11-5	04	No	Volkswagen
VW/270	VN/12/1	13193 00	8080	L-477	250.00	10-A	54.80	5.00	10	11-5	04	No	Volkswagen
VW/271	VN/13/1	11259 00	8081	L-476	250.00	10-A	44.80	5.00	10	11-5	04	No	Volkswagen
VW/272	VN/11/1	11293 00	8078	L-508	248.00	10-A	45.00	4.00	10	11-5	04	No	Volkswagen
VW/273	VN/15/1	10186 00		L-548	180.00	08-A	29.80	5.00	08	11-5	04	No	Volkswagen
VW/274			1354	L-645	180.00	08-A	29.80	5.00	08	11-5	04	No	Volkswagen

FRAS-LE	BFMC	WVA	FMSI	LonaFlex.					#			WI - ID	
VW/275			1352	L-478	250.00	08-A/10-A	54.80	6.00	08/10	11-5	02+02	No	Volkswagen
VW/276			1402	L-646	200.00	10-A	38.60	5.20	10	11-5	04	No	Ford, Volkswagen
VW/277	DK/30/1	11575 00		L-1050	230.00	10-A	38.60	5.00	10		04	No	Audi, Volkswagen
VW/278		11065 00		L-1051	230.00	10-A	38.60	5.00	10		04	No	Audi, Volkswagen

Remarks/*Notas:*			
"#"	Blank column: item is supplied undrilled only. *Columna en blanco: el ítem es suministrado sin perforar.*		Length. *Desarrollo interno.*
	Drum diameter. *Diámetro tambor.*		Thickness. *Espesor.*
	Width. *Ancho.*		Pcs/Set. *Piezas/Juego.*
	Drilling Diagram. *Diagrama de Perforación.*		

WI - Wear Indicator / *ID - Indicador de Desgaste*

BFMC	WVA	FMSI	LonaFlex.	FRAS-LE					#	T		WI - ID	
AL/49		19172 00			394.00	01-SF	152.40	11.90			08	No	Albion LeyLand
AX/14/6	19896 00	4311-J	L-358-J		419.00	14-C	177.80	18.60	14	10-08	08	Optional	Autocar, Brockway, Chevrolet Truck, Dodge Truck, Eaton Brakes, Ford Truck, GMC Truck, International
BC/35/1	19200 00		L-841		420.00	10-A	160.00	17.80-11.00	10	08x15	08	No	BPW, Cardi, Crane Fruehauf, SAE, SAF/Sauer, Warsteiner
BC/36/1	19032 00	1477-TT c/17.8	L-816		420.00	10-A	180.00	17.80/11.00	10	13-12	08	Yes/Si	Achsen, Acerbi, Battaglino, BPW, DAF, Fruehauf, Knott, Lecinena, Piacenza, SAF, Steyr, Zorzi
BC/37/1	19094 00		L-738		420.00	10-A	200.00	17.80/11.00	10	13-12	08	Optional	Achsen, Acerbi, Battaglino, BPW, DAF, Fruehauf, Lecinena, Piacenza, SAF, Steyr, Zorzi
BC/39	17115 00		L-937		400.00	01-SF	120.00	10.00			08	No	BPW, SAF/Sauer
BC/79/1	19573 00		L-938		300.00	08-A	150.00	17.50/10.60	08	08x18	08	Yes/Si	BPW
BC/80/1	19574 00		L-823		300.00	08-A	200.00	17.50/10.60	08	08x18	08	Optional	Acerbi, Bai et Fond, Bertoja, BPW, Cardi, Kässbohrer, Lecitrailer, Piacenza, Rolfo, Trabosa, Zorzi
BC/81/1	19825/591 00		L-939		420.00	10-A	220.00	17.80/11.00	10	08x15	08	Optional	BPW
BC/90/91/1	19166/167 00		L-940		400.00	10-A/10-A	200.00	19.20-14.10/19.00-6.90	10/10	08x20	04+04	Yes/Si	Kässbohrer
BC/92/93/1	19168/169 00		L-941		400.00	10-A/10-A	150.00	19.00-6.90/19.20-14.10	10/10	08x20	04+04	Yes/Si	Kässbohrer, Lohr
BC/97/1	19094 97		L-942		420.00	10-A	200.00	17.50/10.70	10	08x15	08	Optional	Acerbi, Battaglino, Benalu, BPW, Cardi, Crane Fruehauf, Kässbohrer, Renault
BC/98/1	19032 97		L-943		420.00	10-A	180.00	17.50/10.70	10	08x15	08	Optional	Acerbi, Battaglino, Benalu, BPW, Cardi, Crane Fruehauf, Kässbohrer, Renault
BC/100/101/1	19902/903 00		L-815		360.00	08-A/10-A	199.50	17.50-11.50/17.50-9.30	08/10	08x15	04+04	Yes/Si	BPW, Gorica. Viberti
BC/104/105/1	19952/953 00		L-936		360.00	08-A/10-A	160.00	17.50-9.30/17.50-11.50	10/08	08x15	04+04	Yes/Si	BPW, Viberti
BC/120/121/1	19718/719 00				360.00	12-C/12-C	200.00	20.06-12.73/21.03-18.44	12/12		04+04	Yes/Si	
BO/35	15245 00				356.00	01-SF	81.00	10.70			04	No	Bedford
BO/37/38	15280/281 00				330.00	01-SF	80.80	10.70/5.20			02+02	No	AWD, Bedford
BO/39/40	17229/230 00				330.00	01-SF	106.40	10.70/5.20			02+02	No	AWD, Bedford
BO/43/44	17479/566 00				406.00	01-SF	106.40	10.70/5.20			02+02	No	Bedford
BO/55/56	17713/714 00		L-950		410.00	01-SF	127.00	12.30/6.70			02+02	No	AWD, Bedford
BT/59/6	19657 00		L-851		414.00	09-A	175.00	13.50	09	08x18	04	Optional	Heuliez, Renault
CB/31/1 F			L-781	**F/787**	410.00	14-B	148.50	14.80	14		08	Yes/Si	Nissan / U.D.
CB/31/1 R			L-756	**F/788**	410.00	15-B	220.00	16.00	15		08	Yes/Si	Nissan / U.D.
CW/1/1		4610	L-894		381.00	08-A	101.60	18.60/11.90	08	10-09	08	No	Chevrolet Truck, GMC Truck, Mack Truck, Rockwell Axle
CW/2/1		4615	L-854		381.00	08-A	127.00	18.60/11.90	08	10-09	08	Optional	Autocar, Brockway Truck, Diamond Reo, Dodge Truck, Ford Truck, International, Rockwell Axle, White Truck
CW/3/1	19502 00	4605	L-845		381.00	08-A	152.40	18.60/11.90	08	10-09	08	Optional	Autocar, Chevrolet Truck, Diamond Reo, Dodge Truck, Ford Truck, GMC Truck, International, Rockwell Axle
CW/4/1/2	19384/385 00				381.00	12-C/12-H	177.80	18.60/11.90	12	10-10	06+02	Optional	Heuliez, Iveco, Van Hool, Volvo
CW/4/1	19384 00	4602	L-857		381.00	12-C	177.80	18.60/11.90	12	10-10	08	Optional	Autocar, Chevrolet Truck, Dodge Truck, Ford Truck, GMC Truck, International, Mack Truck, Rockwell Axle
CW/4/2	19385 00		L-954		381.00	12-H	177.80	18.60-11.93	12		8	No	Iveco, Volvo
CW/7/1		4618	L-895		660.00	24-D	203.20	18.60/12.60	24	10-	08	No	Rockwell Axle
CW/11/1	19887 00		L-952		394.00	16-B	177.80	19.50/12.80	16		08	Yes/Si	Ford, Iveco
CW/12/1	19921 00		L-953		394.00	16-B	200.00	19.50/12.80	16		08	Yes/Si	AWD, Ford, Iveco, Leyland/ DAF
DF/16/17/1			L-955		419.00	14-D/14-D	178.00	18.50-9.30/18.60-14.00	14/14		04+04	Optional	DAF
DF/16/17/2	19256/260 00		L-956		419.00	14-D/14-D	178.00	18.50-9.30/18.60-14.00	14/14	10-10	04+04	Yes/Si	Auwarter, Bova, DAF
DF/20/21/2			L-957		419.00	10-A/10-A	152.40	18.50-9.40/18.60-14.00	10/10		04+04	Optional	DAF, Sisu
DF/20/21/3	19150/151 00		L-958		419.00	10-A/10-A	152.40	18.50-9.40/18.60-14.00	10/10	10-10	04+04	Optional	Bova, DAF, Lag, Optare, Sisu, Trailor
DF/32/33/1	19890/891 00		L-959		420.00	16-B/16-B	200.00	18.80-16.00/18.70-11.40	16/16	10-10	04+04	Yes/Si	Bova, DAF
DF/34/35/1	19900/901 00		L-960		420.00	08-A/08-A	150.00	18.70-11.40/18.80-16.00	08/08	10-10	04+04	Yes/Si	DAF, Optare
DF/36/37/1	19888/889 00		L-961		420.00	12-C/12-C	175.00	18.70-11.40/18.80-16.00	12/12	10-10	04+04	Yes/Si	DAF
DF/38/39/1	19914/915 00		L-962		420.00	16-B/16-B	240.00	18.70-11.40/18.80-16.00	16/16	10-10	04+04	Yes/Si	DAF, Optare
DF/44/45/1	19010/011 00		L-836	**DF/235**	420.00	08-A/08-A	150.00	21.00-12.70/21.10-17.60	08/08	10-10	04+04	Yes/Si	DAF
DF/46/47/1	19052/055 00		L-837		420.00	12-C/12-C	175.00	21.00-12.70/21.10-17.60	12/12	10-10	04+04	Yes/Si	DAF

BFMC	WVA	FMSI	LonaFlex.	FRAS-LE					#	T		WI - ID	
DF/48/49/1	19063/064 00		L-838		420.00	16-B/16-B	200.00	21.00-12.70/21.10-17.60	16/16	10-10	04+04	Yes/Si	Bova, DAF
DF/50/51/1	19069/077 00		L-839		420.00	16-B/16-B	240.00	21.00-12.60/21.10-17.50	16/16	10-10	04+04	Yes/Si	DAF
DK/30/1	11575 00		L-1050	**VW/277**	230.00	10-A	38.60	5.00	10		04	No	Audi. Volkswagen
FD/50/51/1	13057/058 00	8020	L-917		254.00	10-A/12-A	44.50	4.80	22	ESPECIAL	02+02		Peugeot, Simca
FH/100 F		1410	L-772		320.00	06-A	110.00	11.50	06	10-	08	Yes/Si	International Truck, Mitsubishi Fuso, UD-Nissan
FH/100 R		1434	L-770		320.00	06-A	130.00	11.50	06		08	Yes/Si	International Truck, Mitsubishi Fuso, UD-Nissan
FI/86/1	17481 00		L-970	**FI/115**	420.00	16-A	125.00	12.00	16	13-	04	No	Fiat
FI/100/101/1	15732/733 00		L-967		325.00	12-A/14-A	80.00	7.00	14/12	06x12	02+02	No	Iveco, Perrot
FI/120/121/1	17924/925 91			**F/761**	325.00	12-A/14-A	100.00	11.70	12/14		04	Yes/Si	Iveco
FI/124/1	19918 00		L-628		360.00	18-E	170.00	14.00	18	08x16	04	No	Dennis, Iveco
FT/6/7/1	19557/606 00		L-972		419.00	16-B/16-B	203.20	18.10-9.60/18.20-14.30	16/16	05x16	04+04	Yes/Si	Acerbi, Benalu, Crane Fruehauf, SMB, Trailor
FT/15/16/1	19790/791 00		L-971		419.00	12-C/12-C	177.80	18.30-14.50/18.30-9.80	12/12	05x16	04+04	Yes/Si	Crane Fruehauf
FU/4/5/1	19824/	4551	L-696		419.00	12-C/12-C	219.10	18.10-9.60/18.20-14.30	12/12	08-10	04+04	Optional	Black Diamond, Dana, Eaton Brakes, Fruehauf, Hobbs, K-B Axle, Lufkin, Rockwell Axle, Standard Forge
FU/4/5/3	19369/370 00	4551-Z	L-696-Z		419.00	12-C/12-C	219.10	18.20-14.30/18.10-9.60	12/12	10-10	04+04	Optional	Fruehauf, Lecinena, Meritor, ROR, Trailor, SAF/Sauer, Van Hool, York
FU/4/5/4	19842/843		L-973		419.00	12-C/12-C	219.10	18.20-14.30/18.10-9.60	12/12		04+04	Optional	Fruehauf, Highway, Meritor, Northern, Scammell, Van Hool, York
FU/4/5/6		4551-B	L-696-B		419.00	16-B/16-B	219.10	18.10-9.60/18.20-14.30	16/16	10-08	04+04	Optional	Great Dane, Rockwell Axle, Timpte, Trailmobile
GG/83/1	19072 00		L-981		394.00	12-A	152.40	12.70	12		04	Optional	AEC, Bedford, Bristol, Brockhouse, Carrimore, Crane Fruehauf, DAF, Dennis, Dyson, ERF, Guy
GG/83/2			L-982		394.00	12-A	152.40	12.70	12		04	Optional	
GG/92/1	19111 00		L-983		394.00	18-C	177.80	12.70	18		04	Optional	AEC, Bedford, Crane Fruehauf, DAF, Dennis, Dennison, ERF, Guy, Iveco, Nissan, Pegaso, Pitt
GG/140	19351 00		L-975		394.00	01-SF	152.40	12.70			04	No	Bedford, DAF, Iveco, Renault
GG/142/1	19371 00		L-976		394.00	18-C	203.20	12.70	18		04	No	AEC, Bedford, DAF, Dennis, ERF, Renault, Scammell
GG/144	17555 00		L-977		330.00	01-SF	101.60	9.50			04	No	DAF, Iveco, Renault
GG/147/148	17556/558 00		L-978		308.00	01-SF	101.60	7.50			02+02	No	DAF, Iveco, Renault
GG/149	15563 00		L-979		330.00	01-SF	76.20	8.00			04	No	Bedford, Dodge, Ford, Karrier
GG/153	17316 00				394.00	01-SF	127.00	12.70			04	No	Dodge, Ford, Leyland/DAF
GG/164	17663		L-980		330.00	01-SF	127.00	9.50			02+02	No	DAF, Iveco, Renault
GG/217/1	17017 00		L-849		360.00	08-A	140.00	16.30/11.50	08	08x15	08	Yes/Si	MAN, Optare, Renault
GG/218/1	19177 00		L-848		360.00	12-C	160.00	16.30/11.50	12	10-08	08	Yes/Si	MAN, Optare
IL/66/67/1	19840/841	4515	L-157		419.00	12-C/12-C	177.80	18.10-9.60/18.20-14.30	12/12	08-10	04+04	Optional	Black Diamond, Brockway, Chevrolet Truck, Eaton Brakes, GMC Truck, Mercedes-Benz, Rockwell Axle
IL/66/67/3	19036/037 00	4515-C	L-157-A		419.00	12-C/12-C	177.80	18.10-9.60/18.20-14.30	12/12	10-10	04+04	Optional	Dana, Fiat, FNM, FNV, Guerra, International
IL/66/67/5			L-986		419.00	12-C/12-C	177.80	18.20-14.30/18.10-9.60	12/12		04+04	Optional	Baj et Fond, Benalu, Brockhouse, Crane Fruehauf, Dyson, Fox, Meritor, Pitt, SAF/ Sauer, Titan, Van Hool, York
IL/66/67/8			L-987		419.00	12-C/12-C	177.80	18.20-14.30/18.10-9.60	12/12		04+04	Yes/Si	
IL/68/69/1	19088/089 00	4514	L-136		419.00	08-A/08-A	152.40	18.10-9.60/18.20-14.30	08/08	08-10	04+04	Optional	Chevrolet Truck, Dodge Truck, Eaton Brakes, K-B Axle, Rockwell Axle, Standard Forge, Trailc
IZ/28/1		1418	L-767		410.00	10-N	140.00	15.80	10		08	Optional	Chev/GMC Truck, Isuzu Truck
LE/59/1	17157 05		L-991		394.00	12-A	127.00	18.50	12	10-12	04	Optional	DAF
LE/60/1/2	19066/067 00		L-825		394.00	17-A/17-B	203.20	18.70	17/17	10-12	02+02	Optional	Albion, DAF, Leyland
LE/64/1/2	19178/179 00		L-994		394.00	17-A/17-B	177.80	15.00	17/17	10-12	02+02	No	Albion, Brossel, DAF, Leyland, Scammell
LE/69/1	19662 00		L-826		394.00	12-A	152.40	18.80	12	10-12	04	Optional	DAF
LZ/2/3/1	19762/763 00				303.00	08-A/08-A	200.00	15.76-7.02/15.94-13.64	08/08		04+04	Yes	Kaiser, Lohr
MB/20/1	15090 00		L-114	**MB/155**	400.00	14-A	60.00	6.50	14	07-06	04	No	Mercedes-Benz
MB/48/1	17059 00	1313	L-101	**MB/161**	408.00	08-A	100.00	10.00	08	13-10	08	No	Mercedes-Benz
MB/48/2	17258 00		L-1007		408.00	08-A	100.00	10.00	08	13-10	08	No	Mercedes-Benz, TATA
MB/51/1	19160 00	1302	L-1055		440.00	08-A	170.00	15.00	08	08x18	08	No	Mercedes-Benz

BFMC	WVA	FMSI	LonaFlex.	FRAS-LE					#	T		WI - ID	
MB/55/1	15123 00	1312	L-102	**MB/164**	408.00	08-A	80.00	10.00	08	13-10	08	No	Mercedes-Benz
MB/56/2	17259 00	1317	L-348	**MB/176**	408.00	08-A	120.00	10.00	08	13-10	08	No	Mercedes-Benz
MB/58/3	19466 00		L-1009		408.00	10-N	220.00	19.20	10	08x15	08	Optional	Mercedes-Benz
MB/60/1	17276 00		L-737		430.00	08-A	140.00	15.00	08	08x20	08	Optional	Mercedes-Benz
MB/61	19125 00		L-1010		370.00	01-SF	160.00	19.40			08	No	Auwarter, Mercedes-Benz
MB/64/1	15057 00		L-569	**MB/255**	300.00	10-A	90.00	10.60	10	08x15	04	Optional	Mercedes-Benz
MB/65/1	17105 00	1305	L-501	**MB/180**	418.00	08-A	140.00	14.80	08	13-10	08	Optional	Mercedes-Benz
MB/66/1	19182 00	1304	L-509	**MB/181**	418.00	08-B	160.00	14.80	08	13-10	08	Optional	Mercedes-Benz
MB/67/1	17297 00		L-1011		418.00	08-A	100.00	15.00	08	08x15	08	Optional	Auwarter, Mercedes-Benz
MB/68/1	17298 00	1310	L-874	**MB/140**	418.00	08-A	120.00	15.00	08	08x15	08	Optional	Auwarter. Mercedes-Benz
MB/69/70/1	15349/350 90		L-1012		300.00	12-A/14-A	69.00	9.00	14/12	06x10	02+02	Optional	Mercedes-Benz
MB/71/1	17409 00		L-1013		300.00	10-A	135.00	10.60	10	08x15	04	Optional	Mercedes-Benz
MB/72/73/1	15580/581 96	1320	L-522	**MB/186**	300.00	12-A/14-A	98.00	9.80	12/14	06x10	02+02	Optional	Mercedes-Benz
MB/74/75/1	19579/580 00	4656	L-131	**MB/190**	410.00	08-B/10-C	160.00	17.70-15.20/17.60-7.80	10/08	08x20	04+04	Yes/Si	Mercedes-Benz
MB/74/75/2	19579/706 00				410.00	08-I/10-C	160.00	17.70-15.20/17.60-7.80	10/08	08x20	04+04	Optional	Mercedes-Benz
MB/76/77/1	19581/582 00	4657	L-133	**MB/191**	410.00	08-B/10-C	220.00	17.70-15.20/17.60-7.80	10/08	08x20	04+04	Yes/Si	Mercedes-Benz
MB/76/77/2	19581/707 00				410.00	08-I/10-C	220.00	17.70-15.20/17.60-7.80	10/08	08x20	04+04	Optional	Mercedes-Benz
MB/82/83/1	17795/796 00		L-1006	**MB/145**	410.00	08-A/10-A	140.00	17.60-7.80/17.70-15.20	10/08	08x15	04+04	Yes/Si	Mercedes-Benz
MB/84/85/1	19632/633 00		L-1014		410.00	08-B/10-C	180.00	17.70-15.20/17.60-7.80	08/10	08x18	04+04	Yes/Si	Sanos
MB/93/1	17409 19				304.00	10-A	135.00	12.50	10	08x15	04	Optional	Mercedes-Benz
MB/94/95/1	15580/581 16		L-522-E	**MB/187**	304.00	12-A/14-A	98.00	11.80	12/14	06x10	02+02	Optional	Mercedes-Benz
MB/96/1	17927 00		L-1015		308.00	10-A	105.00	11.50/7.20	10	08x15	04	Yes/Si	Mercedes-Benz
MB/97/1/2	17280/928 00		L-1018		304.00	10-A/10-G	120.00	11.50/7.20	10/10	08x15	02+02	Yes/Si	Mercedes-Benz
MB/97/1	17928 00				304.00	10-A	120.00	11.50/7.20	10	08x15	04	Yes	Mercedes-Benz
MB/98/99/1	17949/950 00		L-1019		360.00	06-A/08-A	130.00	13.50-8.00/13.50-11.30	08/06	08x15	04+04	Yes/Si	Mercedes-Benz, SOR
MB/100/101/1	17973/974 00		L-832		300.00	12-A/14-A	102.50	9.30	12/14	06x10	02+02	Yes/Si	Mercedes-Benz
MB/102/1	17929 00		L-840		304.00	10-A	135.00	11.50/7.20	10	08x15	04	Yes/Si	Mercedes-Benz
MB/103/1	15836 00		L-995		304.00	10-A	90.00	11.50/7.20	10	08x15	04	Yes/Si	Mercedes-Benz
MB/104/105/1	19844/845 00		L-996		360.00	06-E/08-B	160.00	13.50-11.30/13.50-8.00	06/08	08x15	04+04	Yes/Si	Mercedes-Benz
MB/107/108/1	15869/870 00		L-997		300.00	12-A/14-A	87.50	9.30	12/14	06x15	02+02	Yes/Si	Mercedes-Benz
MB/109/1	17927 20		L-998		308.00	10-A	105.00	13.50/9.20	10	08x15	04	Yes/Si	Mercedes-Benz
MB/110/1 /2	17280/928 20				308.00	10-A/10-G	120.00	13.50/9.20	10/10	08x15	02+02	Yes/Si	Mercedes-Benz
MB/111/112/1	17949/950 20		L-833		364.00	06-A/08-A	130.00	15.50-10.00/15.50-13.30	08/06	08x15	04+04	Yes/Si	Mercedes-Benz
MB/113/114/1	19844/845 20		L-835		364.00	06-E/08-B	160.00	15.50-13.30/15.50-10.00	06/08	08x15	04+04	Yes/Si	Mercedes-Benz
MB/115/1	17929 20		L-1002		308.00	10-A	135.00	13.50/9.20	10	08x15	04	Yes/Si	Mercedes-Benz
MB/116/1	15836 20		L-1003		308.00	10-A	90.00	13.50/9.20	10	08x15	04	Yes/Si	Mercedes-Benz
MB/117/118/2	17351/975 04		L-586	**MB/193**	300.00	12-A/14-H	122.00	9.70	12/14	06x12	02+02	Yes/Si	Mercedes-Benz
MB/120/2	19505 20		L-1005		364.00	08-I	200.00	15.50/10.00	08	08x12	02	Yes/Si	Mercedes-Benz
MB/120/121/1	19078/112 20		L-834		364.00	06-E/08-B	200.00	15.50-10.00/15.50-13.30	08/06	08x12	04+04	Yes/Si	Mercedes-Benz
MB/120/121/2	19078/112/505 20		L-1004		364.00	06-E/08-B/08-I	200.00	15.50-10.00/15.50-13.30	08/06	08x12	02+02+04	Yes	Mercedes-Benz
MP/29/1	17682 00	4694	L-652-B	**MB/177**	410.00	08-A	120.00	17.30/12.10	08	13-10	08	Yes/Si	Mercedes-Benz
MP/30/1/2	17239/683		L-1021		410.00	08-A/08-H	140.00	17.30/12.10	08	08x20	06+02	Yes/Si	Mercedes-Benz
MP/30/1	17683 00	4695	L-651	**MB/183**	410.00	08-A	140.00	17.30/12.10	08	08x20	08	Yes/Si	Mercedes-Benz
MP/30/2	17238 00		L-1020		410.00	08-H	140.00	17.30/12.10	08	08x20	08	Yes/Si	MAN, Mercedes-Benz, Renault
MP/31/1/2	19486/494 00		L-1022		410.00	08-B/08-I	160.00	17.30/12.10	08/08	08x20	06+02	YES	Mercedes-Benz
MP/31/1	19486 00	4671	L-552	**MB/184**	410.00	08-B	160.00	17.30/12.10	08	08x20	08	Yes/Si	Mercedes-Benz
MP/31/2	19494 00		L-843		410.00	08-I	160.00	17.30/12.10	08	08x20	08	Yes/Si	MAN, Mercedes-Benz, Optare, Renault, Van Hool
MP/32/1/2	19487/495		L-1023		410.00	08-B/08-D	180.00	17.30/12.10	08/08	08x20	06+02	YES	MAN, Mercedes-Benz, Optare, Renault, Van Hool
MP/32/1	19487 00		L-551	**MB/185**	410.00	08-B	180.00	17.30/12.10	08	08x20	08	Yes/Si	Mercedes-Benz
MP/32/2	19495 00		L-844		410.00	08-D	180.00	17.30/12.10	08	08x20	08	Yes/Si	MAN, Mercedes-Benz, Renault, Steyr, Van Hool
MP/36/1/2	19488/496 00		L-1024		410.00	08-B/08-D	220.00	17.30/12.10	08/08	08x20	06+02	YES	Mercedes-Benz
MP/36/1	19488 00	4672	L-227	**MB/188**	410.00	08-B	220.00	17.30/12.10	08	08x20	08	Yes/Si	Mercedes-Benz
MP/36/2	19496 00		L-771		410.00	08-D	220.00	17.30/12.10	08	08x20	08	Yes/Si	MAN, Mercedes-Benz, Steyr
MP/37/38/1	15817/823 00		L-141	**VW/255**	324.00	10-A/12-A	96.50	12.00	10/12	13-	02+02	No	Volkswagen
NN/12/1	15543 00		L-769		320.00	12-A	75.00	8.00	12		04	No	Chev/GMC Truck, Isuzu Truck
NN/24			L-1025		292.00	01-SF	55.00	6.50			04	No	Datsun
NN/34			L-1026		204.00	01-SF	34.00	4.00			02	No	Daihatsu

BFMC	WVA	FMSI	LonaFlex.	FRAS-LE					#	T		WI - ID	
NN/37			L-1027		229.00	01-SF	40.00	4.50			04	No	Datsun
NN/40/1			L-789		400.00	06-A	129.00	15.00	06		08	Optional	Datsun, Minsei
NN/41/1	19814 00		L-790		410.00	09-A	180.00	18.00	09		08	Optional	Datsun, Minsei
NN/46		1334		F/1093	322.40	01-SF	100.00	11.20			04	No	Hino
NN/52/1	19623 00	1335	L-791		406.00	12-G	178.00	12.70	12		08	No	Hino
NN/60/1	17341 00	4737	L-792		406.00	08-A	127.00	15.50	08		08	Yes/Si	Hino
NN/61/1	19683 00	4736	L-768		406.00	12-G	203.20	15.50	12		08	Optional	Hino
NN/63/1			L-743	F/724	412.00	12-G	216.00	15.50	12	10-10	08	Yes/Si	Denning, Hino Bus
OP/18/1	13113 00		L-1028		230.00	12-A	50.00	5.00	12		04	No	Opel
OP/20	13189 00	8026	L-1029		200.00	01-SF	45.00	5.00			04	No	Opel
OP/24/1	10125 00		L-1030		200.00	10-K	28.00	5.00	10		04	No	Opel
PB/13	19690 00		L-852		500.00	01-SF	180.00	17.80/12.60			08	No	Perrot
PB/16/17/1	19849/850 00		L-1031		410.00	08-A/08-L	160.00	17.40-6.40/17.50-15.70	08/08	10x18	04+04	No	Auwarter, Kässbohrer, Menarini, Perrot
PB/18/19/1	19847/848 00		L-1032		410.00	12-E/12-I	220.00	17.50-15.70/17.40-6.40	12/12	10x18	04+04	No	Auwarter, Kässbohrer, Perrot, Van Hool
PB/23/26/1	17096/099 00		L-736	IV/158	310.00	12-A/14-H	100.00	12.60	12/14		02+02	No	Iveco
PB/24/1/2	19263/343 00				410.00	14-M/14-N	200.00	21.40/15.90	14/14	08x20	06+02	Yes/Si	Iveco, Perrot, Tatra
RN/78/1	11114 00		L-1034		228.00	08-A	40.00	5.00	08		04	No	Chrysler, Renault
RN/100/1	19934 00		L-1033		414.00	08-A	150.00	18.50	08	08x18	08	Yes/Si	Renault
RN/101/1	19935 00		L-742		414.00	08-A	175.00	18.50	08	08x18	08	Yes/Si	Heuliez, Renault
RN/104/1	19187 00		L-817		413.00	08-B	220.00	18.50	08	08x18	08	No	Heuliez, Karosa, Renault
RW/1/2/1			L-1035		419.00	12-C/12-C	203.20	18.20-14.30/18.10-9.60	12/12		04+04	Optional	Foden, Fox, Merryworth, Rockwell
RW/1/2/3	19365/366 00		L-1036		419.00	12-C/12-C	203.20	18.10-9.60/18.20-14.30	12/12		04+04	Yes/Si	Baj et Fond, Crane Fruehauf, Kaiser, Meritor, Merriworth, SAE (Dupillier), Samro, Scammell, Trailor, Van Hool
RW/1/2/5	19017/997 00	4644-A	L-993-A		419.00	16-B/16-B	203.20	18.20-14.30/18.10-9.60	16/16	10-10	04+04	Yes/Si	DAF, Foden, Seddon Atkinson
RW/5/6/4	19613/614 00		L-1056		419.00	16-B/16-B	177.80	19.40-10.90/19.50-15.60	16/16		04+04	Yes/Si	Crane Fruehaulf, DAF, Foden, Meritor, Optare, Seddon Atkinson
RW/9/13/3	19604/605 00		L-819		311.00	10-B/10-B	190.50	15.70-12.50/15.50-8.30	10/10	10-10	04+04	Yes/Si	Acerbi, Crane Fruehauf, Dyson, Meritor, Moseley, Samro, Scammell, Van Hool
RW/21/22/1	19908/909 00		L-818		350.00	10-B/10-B	200.00	18.30-10.40/18.40-14.60	10/10	10-10	04+04	Yes/Si	Meritor, Samro, Zorzi
RW/28/1/2	19555/556 00		L-1063	IV/161	410.00	12-K/12-L	180.00	21.20/12.50	12	08x15	02+06	Yes/Si	Iveco, Meritor, Rockwell
RW/28/30/31/1	19714 00				410.00	12-K/12-L/12-L	179.60	22.00/13.80 - 22.00/11.70	12/12/12		02+02+04	Optional	Iveco, Meritor, Rockwell
RW/29/1/2	19553/554 00		L-1062	IV/159	410.00	12-K/12-L	199.60	21.20/12.50	12	08x15	06+02	Yes/Si	ERF, Iveco, Meritor, Rockwell
RW/29/32/33/1	19716 00		L-988	IV/160	410.00	12-K/12-L/12-L	199.60	22.10-11.90/22.20-13.90/21.20-12.50	12/12/12	08x15	02+02+04	Yes/Si	ERF, Iveco, Meritor, Rockwell
RW/34/35/1	19030/033 00		L-1037		420.00	12-C/12-C	177.80	21.70-16.40/21.60-11.00	12/12	10-10	04+04	Yes/Si	Meritor
RW/36/37/1	19109/110 00				416.00	12-K/12-L	179.00	22.90-15.70	12		04+04	Yes/Si	Iveco
RW/38/39/1	19116/119 00		L-1052	IV/164	410.00	12-K/12-L	199.60	21.96-15.60/21.60-13.70	12		04+04	Yes/Si	Iveco
SA/10/11/1	19049/199 95		L-827		414.00	22-A/26-A	150.00	12.50	26/22	06x15	02+02	No	Colaert, Crane Fruehauf, Heuliez, Lazenave, Maduraud, Renault, Titan
SJ/22/23/1	19515/516 00		L-828		300.00	08-A/08-A	200.00	15.60-7.60/15.70-12.00	08/08	08x18	04+04	Yes/Si	Kaiser, Kässbohrer, King, Lag, SAE (Dupillier), SAF/Sauer
SJ/24/25/1	19517/518 00		L-1039		300.00	08-A/08-A	150.00	15.60-7.60/15.70-12.00	08/08	08x18	04+04	Yes/Si	SAE (Dupillier), SAF/Sauer, Trailor
SJ/26/27/1	19892/893 00		L-1040		355.00	10-A/10-A	200.00	18.50-9.10/18.60-14.40	10/10	08x18	04+04	Yes/Si	SAE (Dupillier), SAF/Sauer, Trailor
SJ/28/29/1	19283/284 00		L-858		420.00	08-A/08-A	177.80	20.30-16.60/20.20-11.60	08/08	08x15	04+04	Yes/Si	Kaiser, SAE, SAF/Sauer
SJ/30/31/1	19477/478 00		L-831		420.00	08-A/08-A	203.20	20.30-17.00/20.20-11.60	08/08	08x15	04+04	Yes/Si	Kaiser, SAE (Dupillier), SAF/Sauer
SJ/32/33/1	19479/480 00		L-1042		367.00	08-A/08-A	180.00	20.80-16.00/20.70-10.70	08/08	08x18	04+04	Yes/Si	SAF/Sauer
SJ/34/35/1	19490/491 00		L-855		367.00	08-A/08-A	200.00	20.80-16.00/20.70-10.70	08/08	08x15	04+04	Yes/Si	SAF/Sauer
SV/7/1	15185 00		L-135	SV/222	413.00	06-A	89.00	19.00	06	10-12	08	No	Scania
SV/8/1	19075 00		L-107	SV/223	413.00	12-B	178.00	19.00	12	10-12	08	Yes/Si	Guerra, Randon, Scania
SV/26/1	17161 00		L-311	SV/224	413.00	08-A	127.00	19.00	08	10-12	08	Yes/Si	Scania
SV/27/1	19393 00		L-497	SV/226	413.00	12-B	203.00	19.00	12	10-12	08	Yes/Si	Guerra, Randon, Scania
SV/34/1	19647 00		L-499	SV/227	413.00	12-B	254.00	19.00	12	10-12	08	Yes/Si	Scania
SV/39/2	17991 00		L-307	SV/228	413.00	08-A	127.00	19.00	08	10-12	04	Yes/Si	Scania
SV/40/2	19931 00		L-308	SV/229	413.00	16-B	178.00	19.00	16	10-12	04	Yes/Si	Scania
SV/41/2	19932 00		L-309	SV/230	413.00	16-B	203.00	19.00	16	10-12	04	Yes/Si	Scania

BFMC	WVA	FMSI	LonaFlex.	FRAS-LE					#	T		WI - ID	
SV/42/2	19933 00		L-310	**SV/231**	413.00	16-B	254.00	19.00	16	10-12	04	Yes/Si	Scania
SV/20/2/26/1	17635/636 01		L-1065	**F/762**	325.00	12-A/14-A	120.00	12.20	12/14		04	Yes/Si	Iveco
SV/23/31/1	19245/782 00		L-350	**ST/350**	420.00	06-A/08-A	160.00	15.00	06/08		04+04	No	
SV/23	19245 00				420.00	01-SF	160.00	15.00			08	No	Steyr
SV/24/1	19246 00		L-351	**ST/351**	420.00	08-A	185.00	15.00	08	10x20	08	Optional	DAF, Steyr
TY/9			L-1048		260.00	01-SF	50.00	4.80			04	No	Toyota
TY/18			L-739		320.00	01-SF	65.00	8.00			04	No	Toyota
TY/19			L-740		320.00	01-SF	85.00	8.00			04	No	Toyota
VL/70/71/1	17664/665 00	4696	L-705	**VV/248**	413.00	08-A/10-A	127.00	19.00-11.70/19.00-14.80	10/08		04+04	Optional	Volvo
VL/72/73/1	19467/468 00	4663	L-706	**VV/250**	394.00	09-A/12-E	177.80	19.00-11.70/19.00-14.80	12/09		04+04	Optional	Volvo
VL/74/75/1	19560/561 00	4662	L-811	**VV/287**	413.00	10-D/12-F	152.40	19.00-11.70/19.00-14.80	12/10		04+04	Optional	Volvo
VL/76/77/1	19562/563 00	4664	L-664	**VV/289**	394.00	09-A/12-E	203.20	19.00-11.70/19.00-14.80	12/09		04+04	Yes/Si	Volvo
VL/81/82/1	19799/800 00	4698	L-665	**VV/290**	394.00	09-A/12-E	254.00	19.00-11.70/19.00-14.80	12/09		04+04	Yes/Si	Volvo
VL/83/84/1	19885/886 00		L-1049	**VV/309**	394.00	09-A/12-E	239.50	19.00-11.70/19.00-14.80	12/09	10-10	04+04	Yes/Si	Volvo
VL/85/1	17992 00		L-709	**VV/296**	410.00	08-A	125.00	18.30/12.60	08		08	Yes/Si	Volvo
VL/86/1	19941 00		L-713	**VV/297**	410.00	12-E	150.00	18.30/12.60	12		08	Optional	Volvo
VL/87/1	19938 00		L-710	**VV/298**	410.00	12-E	175.00	18.30/12.60	12	10-10	08	Yes/Si	Volvo
VL/87/2	19090 00		L-733	**VV/303**	410.00	14-I	173.20	17.90/12.20	14		08	Yes/Si	Volvo
VL/88/1	19939 00		L-711	**VV/299**	410.00	12-E	200.00	18.30/12.60	12	10-10	08	Yes/Si	Volvo
VL/88/2	19071 00		L-734	**VV/304**	410.00	14-I	198.20	17.90/12.20	14		08	Yes/Si	Volvo
VL/89/1	19940 00		L-712	**VV/300**	410.00	12-E	225.00	18.30/12.60	12	10-10	08	Yes/Si	Volvo
VL/89/2	19068 00		L-735	**VV/305**	410.00	14-I	223.20	17.90/12.20	14	10-10	08	Optional	Volvo
VN/2/1	10030 00	881	L-123	**VW/264**	230.00	08-F	30.20	4.00	08	11-05	04	No	Volkswagen
VN/6/1	11119 00	8025	L-126	**VW/266**	230.00	10-A	49.80	5.00	10	11-05	04	No	Volkswagen
VN/7/1	11268 00	882-A	L-124	**VW/262**	230.00	10-A	40.00	4.00	10	11-05	04	No	Volkswagen
VN/11/1	11293 00	8078	L-508	**VW/272**	248.00	10-A	45.00	4.00	10	11-05	04	No	Volkswagen
VN/12/1	13193 00	8080	L-477	**VW/270**	250.00	10-A	54.80	5.00	10	11-05	04	No	Volkswagen
VN/13/1	11259 00	8081	L-476	**VW/271**	250.00	10-A	44.80	5.00	10	11-05	04	No	Volkswagen
VN/15/1	10186 00		L-548	**VW/273**	180.00	08-A	29.80	5.00	08	11-05	04	No	Volkswagen

Remarks/*Notas:*			
T "#"	Blank column: item is supplied undrilled only. *Columna en blanco: el ítem es suministrado sin perforar.*		Length. *Desarrollo interno.*
	Drum diameter. *Diámetro tambor.*		Thickness. *Espesor.*
	Width. *Ancho.*		Pcs/Set. *Piezas/Juego.*
	Drilling Diagram. *Diagrama de Perforación.*		

WVA	FMSI	LonaFlex.	FRAS-LE	BFMC					#			WI - ID	
10030 00	881	L-123	VW/264	VN/2/1	230.00	08-F	30.20	4.00	08	11-05	04	No	Volkswagen
10125 00		L-1030		OP/24/1	200.00	10-K	28.00	5.00	10		04	No	Opel
10186 00		L-548	VW/273	VN/15/1	180.00	08-A	29.80	5.00	08	11-05	04	No	Volkswagen
11065 00			VW/278		230.00	10-A	38.60	5.00	10		04	No	Audi, Volkswagen
11114 00		L-1034		RN/78/1	228.00	08-A	40.00	5.00	08		04	No	Chrysler, Renault
11259 00	8081	L-476	VW/271	VN/13/1	250.00	10-A	44.80	5.00	10	11-05	04	No	Volkswagen
11268 00	882-A	L-124	VW/262	VN/7/1	230.00	10-A	40.00	4.00	10	11-05	04	No	Volkswagen
11293 00	8078	L-508	VW/272	VN/11/1	248.00	10-A	45.00	4.00	10	11-05	04	No	Volkswagen
11575 00		L-1050	VW/277	DK/30/1	230.00	10-A	38.60	5.00	10		04	No	Audi, Volkswagen
13057/058 00	8020	L-917		FD/50/51/1	254.00	10-A/12-A	44.50	4.80	22	ESPECIAL	02+02	No	Peugeot, Simca
13113 00		L-1028		OP/18/1	230.00	12-A	50.00	5.00	12		04	No	Opel
13189 00	8026	L-1029		OP/20	200.00	01-SF	45.00	5.00			04	No	Opel
13193 00	8080	L-477	VW/270	VN/12/1	250.00	10-A	54.80	5.00	10	11-05	04	No	Volkswagen
15057 00		L-569	MB/255	MB/64/1	300.00	10-A	90.00	10.60	10	08x15	04	Optional	Mercedes-Benz
15090 00		L-114	MB/155	MB/20/1	400.00	14-A	60.00	6.50	14	07-06	04	No	Mercedes-Benz
15123 00	1312	L-102	MB/164	MB/55/1	408.00	08-A	80.00	10.00	08	13-10	08	No	Mercedes-Benz
15185 00		L-135	SV/222	SV/7/1	413.00	06-A	89.00	19.00	06	10-12	08	No	Scania
15245 00				BO/35	356.00	01-SF	81.00	10.70			04	No	Bedford
15280/281 00				BO/37/38	330.00	01-SF	80.80	10.70/5.20			02+02	No	AWD, Bedford
15349/350 90		L-1012		MB/69/70/1	300.00	12-A/14-A	69.00	9.00	14/12	06x10	02+02	Optional	Mercedes-Benz
15543 00		L-769		NN/12/1	320.00	12-A	75.00	8.00	12		04	No	Chev/GMC Truck, Isuzu Truck
15563 00		L-979		GG/149	330.00	01-SF	76.20	8.00			04	No	Bedford, Dodge, Ford, Karrier
15580/581 16		L-522-E	MB/187	MB/94/95/1	304.00	12-A/14-A	98.00	11.80	12/14	06x10	02+02	Optional	Mercedes-Benz
15580/581 96	1320	L-522	MB/186	MB/72/73/1	300.00	12-A/14-A	98.00	9.80	12/14	06x10	02+02	Optional	Mercedes-Benz
15732/733 00		L-967		FI/100/101/1	325.00	12-A/14-A	80.00	7.00	14/12	06x10	02+02	No	Iveco, Perrot
15817/823 00		L-141	VW/255	MP/37/38/1	324.00	10-A/12-A	96.50	12.00	10/12	13-	02+02	No	Volkswagen
15836 00		L-995		MB/103/1	304.00	10-A	90.00	11.50/7.20	10	08x15	04	Yes/Si	Mercedes-Benz
15836 20		L-1003		MB/116/1	308.00	10-A	90.00	13.50/9.20	10	08x15	04	Yes/Si	Mercedes-Benz
15869/870 00		L-997		MB/107/108/1	300.00	12-A/14-A	87.50	9.30	12/14	06x15	02+02	Yes/Si	Mercedes-Benz
17017 00			F/981	GG/217/1	360.00	08-A	140.00	16.30/11.50	08	08x15	08	Yes/Si	MAN, Optare, Renault
17059 00	1313	L-101	MB/161	MB/48/1	408.00	08-A	100.00	10.00	08	13-10	08	No	Mercedes-Benz
17096/099 00		L-736	IV/158	PB/23/26/1	310.00	12-A/14-H	100.00	12.60	12/14		02+02	No	Iveco
17105 00	1305	L-501	MB/180	MB/65/1	418.00	08-A	140.00	14.80	08	13-10	08	Optional	Mercedes-Benz
17115 00		L-937		BC/39	400.00	01-SF	120.00	10.00			08	No	BPW, SAF/Sauer
17157 05		L-991		LE/59/1	394.00	12-A	127.00	18.50	12	10-12	04	Optional	DAF
17161 00		L-311	SV/224	SV/26/1	413.00	08-A	127.00	19.00	08	10-12	08	Yes/Si	Scania
17229/230 00				BO/39/40	330.00	01-SF	106.40	10.70/5.20			02+02	No	AWD, Bedford
17238 00		L-1020	F/901	MP/30/2	410.00	08-H	140.00	17.30/12.10	08	08x20	08	Yes/Si	MAN, Mercedes-Benz, Renault
17258 00		L-1007		MB/48/2	408.00	08-A	100.00	10.00	08	13-10	08	No	Mercedes-Benz, TATA
17259 00	1317	L-348	MB/176	MB/56/2	408.00	08-A	120.00	10.00	08	13-10	08	No	Mercedes-Benz
17276 00		L-737		MB/60/1	430.00	08-A	140.00	15.00	08	08x20	08	Optional	Mercedes-Benz
17280/928 00		L-1018		MB/97/1/2	304.00	10-A/10-G	120.00	11.50/7.20	10/10	08x15	02+02	Yes/Si	Mercedes-Benz
17280/928 20			F/990	MB/110/1/2	308.00	10-A/10-G	120.00	13.50/9.20	10/10	08x15	02+02	Yes/Si	Mercedes-Benz
17297 00		L-1011		MB/67/1	418.00	08-A	100.00	15.00	08	08x15	08	Optional	Auwarter, Mercedes-Benz
17298 00	1310	L-874	MB/140	MB/68/1	418.00	08-A	120.00	15.00	08	08x15	08	Optional	Auwarter, Mercedes-Benz
17316 00				GG/153	394.00	01-SF	127.00	12.70			04	No	Dodge, Ford, Leyland/DAF
17341 00	4737	L-792		NN/60/1	406.00	08-A	127.00	15.50	08		08	Yes/Si	Hino
17351/975 04		L-586	MB/193	MB/117/118/2	300.00	12-A/14-H	122.00	9.70	12/14	06x12	02+02	Yes/Si	Mercedes-Benz
17406 00	1490	L-800	F/925		400.00	06-A	130.00	15.00	06		08	No	yuton
17409 00		L-1013	F/995	MB/71/1	300.00	10-A	135.00	10.60	10	08x15	04	Optional	Mercedes-Benz
17409 19				MB/93/1	304.00	10-A	135.00	12.50	10	08x15	04	Optional	Mercedes-Benz
17479/566 00				BO/43/44	406.00	01-SF	106.40	10.70/5.20			02+02	No	Bedford
17481 00		L-970	FI/115	FI/86/1	420.00	16-A	125.00	12.00	16	13-	04	No	Fiat
17555 00		L-977		GG/144	330.00	01-SF	101.60	9.50			04	No	DAF, Iveco, Renault
17556/558 00		L-978		GG/147/148	308.00	01-SF	101.60	7.50			02+02	No	DAF, Iveco, Renault
17557 00				GG/157	387.00	01-SF	108.00	9.50			04	No	Ford, Iveco
17635/636 01		L-1065	F/762	SY/20/2/26/1	325.00	12-A/14-A	120.00	12.20	12/14		04	Yes/Si	Iveco
17663 00		L-980		GG/164	330.00	01-SF	127.00	9.50				No	DAF, Iveco, Renault

WVA	FMSI	LonaFlex.	FRAS-LE	BFMC					#	T		WI - ID	
17664/665 00	4696	**L-705**	VV/248	VL/70/71/1	413.00	08-A/10-A	127.00	19.00-11.70/19.00-14.80	10/08		04+04	Optional	Volvo
17682 00	4694	**L-652-B**	MB/177	MP/29/1	410.00	08-A	120.00	17.30/12.10	08	13-10	08	Yes/Si	Mercedes-Benz
17683 00	4695	**L-651**	MB/183	MP/30/1	410.00	08-A	140.00	17.30/12.10	08	08x20	08	Yes/Si	Mercedes-Benz
17238/683		**L-1021**		MP/30/1/2	410.00	08-A/08-H	140.00	17.30/12.10	08	08x20	06+02	Yes/Si	Mercedes-Benz
17713/714 00				BO/55/56	410.00	01-SF	127.00	12.30/6.70			02+02	No	AWD. Bedford
17795/796 00		**L-1006**	MB/145	MB/82/83/1	410.00	08-A/10-A	140.00	17.60-7.80/17.70-15.20	10/08	08x15	04+04	Yes/Si	Mercedes-Benz
17924/925 91			F/761	FI/120/121/1	325.00	12-A/14-A	100.00	11.70	12/14		04	Yes/Si	Iveco
17927 00		**L-1015**		MB/96/1	308.00	10-A	105.00	11.50/7.20	10	08x15	04	Yes/Si	Mercedes-Benz
17927 20		**L-998**		MB/109/1	308.00	10-A	105.00	13.50/9.20	10	08x15	04	Yes/Si	Mercedes-Benz
17928 00				MB/97/1	304.00	10-A	120.00	11.50/7.20	10	08x15	04	Yes	Mercedes-Benz
17929 00		**L-840**		MB/102/1	304.00	10-A	135.00	11.50/7.20	10	08x15	04	Yes/Si	Mercedes-Benz
17929 20		**L-1002**		MB/115/1	308.00	10-A	135.00	13.50/9.20	10	08x15	04	Yes/Si	Mercedes-Benz
17949/950 00		**L-1019**	F/996	MB/98/99/1	360.00	06-A/08-A	130.00	13.50-8.00/13.50-11.30	08/06	08x15	04+04	Yes/Si	Mercedes-Benz, SOR
17949/950 20		**L-833**		MB/111/112/1	364.00	06-A/08-A	130.00	15.50-10.00/15.50-13.30	08/06	08x15	04+04	Yes/Si	Mercedes-Benz
17973/974 00		**L-832**		MB/100/101/1	300.00	12-A/14-A	102.50	9.30	12/14	6x10	02+02	Yes/Si	Mercedes-Benz
17991 00		**L-307**	SV/228	SV/39/2	413.00	08-A	127.00	19.00	08	10-12	04	Yes/Si	Scania
17992 00		**L-709**	VV/296	VL/85/1	410.00	08-A	125.00	18.30/12.60	08		08	Yes/Si	Volvo
19010/011 00		**L-836**	DF/235	DF/44/45/1	420.00	08-A/08-A	150.00	21.00-12.70/21.10-17.60	08/08	10-10	04+04	Yes/Si	DAF
19017/997 00	4644-A	**L-933-A**	F/1010	RW/1/2/5	419.00	16-B/16-B	203.20	18.20-14.30/18.10-9.60	16/16	10-10	04+04	Yes/Si	DAF, Foden, Seddon Atkinson
19030/033 00		**L-1037**	F/868	RW/34/35/1	420.00	12-C/12-C	177.80	21.70-16.40/21.60-11.00	12/12	10-10	04+04	Yes/Si	Meritor
19032 00	1477-TT c/17.8	**L-816**		BC/36/1	420.00	10-A	180.00	17.80/11.00	10	13-12	08	Yes/Si	Achsen, Acerbi, Battaglino, BPW, DAF, Fruehauf, Knott, Lecinena, Piacenza, SAF, Steyr, Zorzi
19032 97				BC/98/1	420.00	10-A	180.00	17.50/10.70	10	08x15	08	Optional	Acerbi, Battaglino, Benalu, BPW, Cardi, Crane Fruehauf, Kässbohrer, Renault
19036/037 00	4515-C	**L-157-A**		IL/66/67/3	419.00	12-C/12-C	177.80	18.10-9.60/18.20-14.30	12/12	10-10	04+04	Optional	Dana, Fiat, FNM, FNV, Guerra, International
19049/199 95		**L-827**		SA/10/11/1	414.00	22-A/26-A	150.00	12.50	26/22	06x15	02+02	No	Colaert, Crane Fruehauf, Heuliez, Lazenave, Maduraud, Renault, Titan
19052/055 00		**L-837**		DF/46/47/1	420.00	12-C/12-C	175.00	21.00-12.70/21.10-17.60	12/12	10-10	04+04	Yes/Si	DAF
19063/064 00		**L-838**		DF/48/49/1	420.00	16-B/16-B	200.00	21.00-12.70/21.10-17.60	16/16	10-10	04+04	Yes/Si	Bova, DAF
19066/067 00				LE/60/1/2	394.00	17-A/17-B	203.20	18.70	17/17	10-12	02+02	Optional	Albion, DAF, Leyland
19068 00		**L-735**	VV/305	VL/89/2	410.00	14-I	223.20	17.90/12.20	14	10-10	08	Optional	Volvo
19069/077 00		**L-839**		DF/50/51/1	420.00	16-B/16-B	240.00	21.00-12.60/21.10-17.50	16/16	10-10	04+04	Yes/Si	DAF
19071 00		**L-734**	VV/304	VL/88/2	410.00	14-I	198.20	17.90/12.20	14		08	Yes/Si	Volvo
19072 00		**L-981**		GG/83/1	394.00	12-A	152.40	12.70	12		04	Optional	AEC, Bedford, Bristol, Brockhouse, Carrimore, Crane Fruehauf, DAF, Dennis, Dyson, ERF, Guy
19075 00		**L-107**	SV/223	SV/8/1	413.00	12-B	178.00	19.00	12	10-12	08	Yes/Si	Guerra, Randon, Scania
19078/112 20		**L-834**		MB/120/121/1	364.00	06-E/08-B	200.00	15.50-10.00/15.50-13.30	08/06	08x12	04+04	Yes/Si	Mercedes-Benz
19078/112/505 20		**L-1004**		MB/120/121/2	364.00	06-E/08-B/08-I	200.00	15.50-10.00/15.50-13.30	08/06	08x12	02+02+04	Yes	Mercedes-Benz
19086 00		**L-801**	F/926		400.00	06-A	155.00	15.00	06		08	Yes/Si	yuton
19088/089 00	4514	**L-136**		IL/68/69/1	419.00	08-A/08-A	152.40	18.10-9.60/18.20-14.30	08/08	08-10	04+04	Optional	Chevrolet Truck, Dodge Truck, Eaton Brakes, K-B Axle, Rockwell Axle, Standard Forge, Trailc
19090 00		**L-733**	VV/303	VL/87/2	410.00	14-I	173.20	17.90/12.20	14		08	Yes/Si	Volvo
19094 00		**L-738**		BC/37/1	420.00	10-A	200.00	17.80/11.00	10	13-12	08	Optional	Achsen, Acerbi, Battaglino, BPW, DAF, Fruehauf, Lecinena, Piacenza, SAF, Steyr, Zorzi
19094 97				BC/97/1	420.00	10-A	200.00	17.50/10.70	10	08x15	08	Optional	Acerbi, Battaglino, Benalu, BPW, Cardi, Crane Fruehauf, Kässbohrer, Renault
19109 /110				RW/36/37/1		12-L/12-K	179.60	15.69 - 22.95	12/14	08x15	04+04		iveco trakker, euro trakker,
19111 00		**L-983**		GG/92/1	394.00	18-C	177.80	12.70	18	8x15	04	Optional	AEC, Bedford, Crane Fruehauf, DAF, Dennis, Dennison, ERF, Guy, Iveco, Nissan, Pegaso, Pitt
19116/119 00		**L-1052**	IV/164	RW/38/39/1	410.00	12-K/12-L	199.60	21.96-15.60/21.60-13.70	12		04+04	Yes/Si	
19125 00		**L-1010**		MB/61	370.00	01-SF	160.00	19.40			08	No	Auwarter, Mercedes-Benz
19128 00		**L-1069**	F/1096		406.00	12-G	151.50	15.50	12		08	Optional	Hino

WVA	FMSI	LonaFlex.	FRAS-LE	BFMC					#			WI - ID	
19138 00	47217	**L-758**	F/804		412.00	15-B	220.00	16.00	15		08	Yes/Si	Nissan / U.D , Golden Dragon
19139 00		**L-757**	F/803		402.00	10-N	150.00	16.00	10		08	Yes/Si	Nissan / U.D , Golden Dragon
19150/151 00		**L-958**		DF/20/21/3	419.00	10-A/10-A	152.40	18.50-9.40/18.60-14.00	10/10	10-10	04+04	Optional	Bova, DAF, Lag, Optare, Sisu, Trailor
19160 00	1302	**L-1055**		MB/51/1	440.00	08-A	170.00	15.00	08	08x18	08	No	Mercedes-Benz
19166/167 00				BC/90/91/1	400.00	10-A/10-A	200.00	19.20-14.10/19.00-6.90	10/10	08x20	04+04	Yes/Si	Kässbohrer
19168/169 00				BC/92/93/1	400.00	10-A/10-A	150.00	19.00-6.90/19.20-14.10	10/10	08x20	04+04	Yes/Si	Kässbohrer, Lohr
19172 00				AL/49	394.00	01-SF	152.40	11.90			08	No	Albion LeyLand
19177 00				GG/218/1	360.00	12-C	160.00	16.30/11.50	12	10-08	08	Yes/Si	MAN, Optare
19178/179 00				LE/64/1/2	394.00	17-A/17-B	177.80	15.00	17/17	10-12	02+02	No	Albion, Brossel, DAF, Leyland, Scammell
19182 00	1304	**L-509**	MB/181	MB/66/1	418.00	08-B	160.00	14.80	08	13-10	08	Optional	Mercedes-Benz
19187 00		**L-817**		RN/104/1	413.00	08-B	220.00	18.50	08	08x18	08	No	Heuliez, Karosa, Renault
19200 00		**L-841**		BC/35/1	420.00	10-A	160.00	17.80-11.00	10	08x15	08	No	BPW, Cardi, Crane Fruehauf, SAE, SAF/Sauer, Warsteiner
19244 00					420.00	14-P	220.00	15.00	14		08	No	Cnhtc
19245 00				SY/23	420.00	01-SF	160.00	15.00			08	No	Steyr
19245/782 00		**L-350**	ST/350	SY/23/31/1	420.00	06-A/08-A	160.00	15.00	06/08		04+04	No	Steyr
19246 00		**L-351**	ST/351	SY/24/1	420.00	08-A	185.00	15.00	08		08	Optional	DAF, Steyr
19256/260 00		**L-956**		DF/16/17/2	419.00	14-D/14-D	178.00	18.50-9.30/18.60-14.00	14/14	10-10	04+04	Yes/Si	Auwarter, Bova, DAF
19263/343 00				PB/24/1/2	410.00	14-M/14-N	200.00	21.40/15.90	14/14	08x20	06+02	Yes/Si	Iveco, Perrot, Tatra
19283/284 00		**L-858**		SJ/28/29/1	420.00	08-A/08-A	177.80	20.30-16.60/20.20-11.60	08/08	08x15	04+04	Yes/Si	Kaiser, SAE, SAF/Sauer
19351 00		**L-975**		GG/140	394.00	01-SF	152.40	12.70			04	No	Bedford, DAF, Iveco, Renault
19365/366 00		**L-1036**		RW/1/2/3	419.00	12-C/12-C	203.20	18.10-9.60/18.20-14.30	12/12		04+04	Yes/Si	Baj et Fond, Crane Fruehauf, Kaiser, Meritor, Merriworth, SAE (Dupillier), Samro, Scammell, Trailor, Van Hool
19369/370 00	4551-Z	**L-696-Z**		FU/4/5/3	419.00	12-C/12-C	219.10	18.20-14.30/18.10-9.60	12/12	10-10	04+04	Optional	Fruehauf, Lecinena, Meritor, ROR, Trailor, SAF/ Sauer, Van Hool, York
19371 00		**L-976**		GG/142/1	394.00	18-C	203.20	12.70	18		04	No	AEC, Bedford, DAF, Dennis, ERF, Renault, Scammell
19384 00	4602			CW/4/1	381.00	12-C	177.80	18.60/11.90	12	10-10	08	Optional	Autocar, Chevrolet Truck, Dodge Truck, Ford Truck, GMC Truck, International, Mack Truck, Rockwell Axle
19384 00		**L-857**		CW/4/1/2	381.00	12-C/12-H	177.80	18.60/11.90	12	10-10	06+02	Optional	Heuliez, Iveco, Van Hool, Volvo
19385 00				CW/4/2	381.00	12-H	177.80	18.60-11.93	12		08	No	Iveco, Volvo
19393 00		**L-497**	SV/226	SV/27/1	413.00	12-B	203.00	19.00	12	10-12	08	Yes/Si	Guerra, Randon, Scania
19466 00		**L-1009**		MB/58/3	408.00	10-N	220.00	19.20	10	08x15	08	Optional	Mercedes-Benz
19467/468 00	4663	**L-706**	VV/250	VL/72/73/1	394.00	09-A/12-E	177.80	19.00-11.70/19.00-14.80	12/09		04+04	Optional	Volvo
19477/478 00		**L-831**		SJ/30/31/1	420.00	08-A/08-A	203.20	20.30-17.00/20.20-11.60	08/08	08x15	04+04	Yes/Si	Kaiser, SAE (Dupillier), SAF/Sauer
19479/480 00		**L-1042**		SJ/32/33/1	367.00	08-A/08-A	180.00	20.80-16.00/20.70-10.70	08/08	08x18	04+04	Yes/Si	SAF/Sauer
19486 00	4671	**L-552**	MB/184	MP/31/1	410.00	08-B	160.00	17.30/12.10	08	08x20	08	Yes/Si	Mercedes-Benz
19486/194 00		**L-1022**		MP/31/1/2	410.00	08-B/08-I	160.00	17.30/12.10	08/08	08x20	06+02	YES	Mercedes-Benz
19487 00		**L-551**	MB/185	MP/32/1	410.00	08-B	180.00	17.30/12.10	08	08x20	08	Yes/Si	Mercedes-Benz
19487/495		**L-1023**		MP/32/1/2	410.00	08-B/08-D	180.00	17.30/12.10	08/08	08x20	06+02	YES	MAN, Mercedes-Benz, Optare, Renault, Van Hool
19488 00	4672	**L-227**	MB/188	MP/36/1	410.00	08-B	220.00	17.30/12.10	08	08x20	08	Yes/Si	Mercedes-Benz
19488/496		**L-1024**		MP/36/1/2	410.00	08-B/08-D	220.00	17.30/12.10	08/08	08x20	06+02	YES	Mercedes-Benz
19490/491 00		**L-855**		SJ/34/35/1	367.00	08-A/08-A	200.00	20.80-16.00/20.70-10.70	08/08	08x15	04+04	Yes/Si	SAF/Sauer
19494 00		**L-843**		MP/31/2	410.00	08-I	160.00	17.30/12.10	08	08x20	08	Yes/Si	MAN, Mercedes-Benz, Optare, Renault, Van Hool
19495 00		**L-844**		MP/32/2	410.00	08-D	180.00	17.30/12.10	08	08x20	08	Yes/Si	MAN, Mercedes-Benz, Renault, Steyr, Van Hool
19496 00		**L-771**		MP/36/2	410.00	08-D	220.00	17.30/12.10	08	08x20	08	Yes/Si	MAN, Mercedes-Benz, Steyr
19502 00	4605	**L-845**		CW/3/1	381.00	08-A	152.40	18.60/11.90	08	10-09	08	Optional	Autocar, Chevrolet Truck, Diamond Reo, Dodge Truck, Ford Truck, GMC Truck, International, Rockwell Axle
19505 20		**L-1005**		MB/120/2	364.00	08-I	200.00	15.50/10.00	08	08x12	02	Yes/Si	Mercedes-Benz

WVA	FMSI	LonaFlex.	FRAS-LE	BFMC					#	T		WI - ID	
19515/516 00		**L-828**		SJ/22/23/1	300.00	08-A/08-A	200.00	15.60-7.60/15.70-12.00	08/08	08x18	04+04	Yes/Si	Kaiser, Kässbohrer, King, Lag, SAE (Dupillier), SAF/Sauer
19517/518 00		**L-1039**		SJ/24/25/1	300.00	08-A/08-A	150.00	15.60-7.60/15.70-12.00	08/08	08x18	04+04	Yes/Si	SAE (Dupillier), SAF/Sauer, Trailor
19553/554 00		**L-1062**	IV/159	RW/29/1/2	410.00	12-K/12-L	199.60	21.20/12.50	12	08x15	06+02	Yes/Si	ERF, Iveco, Meritor, Rockwell
19555/556 00		**L-1063**	IV/161	RW/28/1/2	410.00	12-K/12-L	180.00	21.20/12.50	12	08x15	02+06	Yes/Si	Iveco, Meritor, Rockwell
19557/606 00		**L-972**		FT/6/7/1	419.00	16-B/16-B	203.20	18.10-9.60/18.20-14.30	16/16	05x16	04+04	Yes/Si	Acerbi, Benalu, Crane Fruehauf, SMB, Trailor
19560/561 00	4662	**L-811**	VV/287	VL/74/75/1	413.00	10-D/12-F	152.40	19.00-11.70/19.00-14.80	12/10		04+04	Optional	Volvo
19562/563 00	4664	**L-664**	VV/289	VL/76/77/1	394.00	09-A/12-E	203.20	19.00-11.70/19.00-14.80	12/09		04+04	Yes/Si	Volvo
19573 00		**L-938**		BC/79/1	300.00	08-A	150.00	17.50/10.60	08	08x18	08	Yes/Si	BPW
19574 00		**L-823**		BC/80/1	300.00	08-A	200.00	17.50/10.60	08	08x18	08	Optional	Acerbi, Bai et Fond, Bertoja, BPW, Cardi, Kässbohrer, Lecitrailer, Piacenza, Rolfo, Trabosa, Zorzi
19579/580 00	4656	**L-131**	MB/190	MB/74/75/1	410.00	08-B/10-C	160.00	17.70-15.20/17.60-7.80	10/08	08x20	04+04	Yes/Si	Mercedes-Benz
19579/706 00				MB/74/75/2	410.00	08-I/10-C	160.00	17.70-15.20/17.60-7.80	10/08	08x20	4+4	Optional	Mercedes-Benz
19581/582 00	4657	**L-133**	MB/191	MB/76/77/1	410.00	08-B/10-C	220.00	17.70-15.20/17.60-7.80	10/08	08x20	04+04	Yes/Si	Mercedes-Benz
19581/707 00				MB/76/77/2	410.00	08-I/10-C	220.00	17.70-15.20/17.60-7.80	10/08	08x20	4+4	Optional	Mercedes-Benz
19591 00				BC/81/1	420.00	10-A	220.00	17.80/11.00	10	08x15	08	Optional	BPW
19604/605 00		**L-819**		RW/9/13/3	311.00	10-B/10-B	190.50	15.70-12.50/15.50-8.30	10/10	10-10	04+04	Yes/Si	Acerbi, Crane Fruehauf, Dyson, Meritor, Moseley, Samro, Scammell, Van Hool
19613/614 00		**L-1056**		RW/5/6/4	419.00	16-B/16-B	177.80	19.40-10.90/19.50-15.60	16/16		04+04	Yes/Si	Crane Fruehaulf, DAF, Foden, Meritor, Optare, Seddon Atkinson
19623 00	1335	**L-791**		NN/52/1	406.00	12-G	178.00	12.70	12		08	No	Hino
19632/633 00		**L-1014**		MB/84/85/1	410.00	08-B/10-C	180.00	17.70-15.20/17.60-7.80	08/10	08x18	04+04	Yes/Si	Sanos
19647 00		**L-499**	SV/227	SV/34/1	413.00	12-B	254.00	19.00	12	10-12	08	Yes/Si	Scania
19657 00		**L-851**		BT/59/6	414.00	09-A	175.00	13.50	09	08x18	04	Optional	Heuliez, Renault
19662 00		**L-826**		LE/69/1	394.00	12-A	152.40	18.80	12	10-12	04	Optional	DAF
19683 00	4736	**L-768**		NN/61/1	406.00	12-G	203.20	15.50	12		08	Optional	Hino
19690 00		**L-852**		PB/13	500.00	01-SF	180.00	17.80/12.60			08	No	Perrot
19691 00		**L-805**	F/938		412.00	10-N	150.00	15.60	10		08	Yes/Si	Nissan / U.D.
19714 00				RW/28/30/31/1	410.00	12-K/12-L/12-L	179.60	22.00/13.80 - 22.00/11.70	12/12/12		02+02+04	Optional	Iveco, Meritor, Rockwell
19716 00		**L-988**	IV/160	RW/29/32/33/1	410.00	12-K/12-L/12-L	199.60	22.10-11.90/22.20-13.90/21.20-12.50	12/12/12	08x15	02+02+04	Yes/Si	ERF, Iveco, Meritor, Rockwell
19718/719 00				BC/120/121/1	360.00	12-C/12-C	200.00	20.06-12.73/21.03-18.44	12/12		04+04	Yes/Si	Benalu,Crane fruehauf
19720/721 00					420.00	10-A/10-A	160.00	21.70-17.40/21.80-12.40	10/10		04+04	Yes/Si	Raba
19728/741 00					420.00	16-B/16-B	220.00	21.70-17.40/21.20-12.40	16/16		04+04	Yes/Si	Raba
19762/763 00				LZ/2/3/1	303.00	08-A/08-A	200.00	15.76-7.02/15.94-13.64	08/08		04+04	Yes	Kaiser, Lohr
19790/791 00		**L-971**		FT/15/16/1	419.00	12-C/12-C	177.80	18.30-14.50/18.30-9.80	12/12	05x16	04+04	Yes/Si	Crane Fruehauf
19799/800 00	4698	**L-665**	VV/290	VL/81/82/1	394.00	09-A/12-E	254.00	19.00-11.70/19.00-14.80	12/09		04+04	Yes/Si	Volvo
19814 00		**L-790**		NN/41/1	410.00	09-A	180.00	18.00	09		08	Optional	Datsun, Minsei
19825/591 00				BC/81/1	420.00	10-A	220.00	17.80/11.00	10	08x15	08	Optional	BPW
19840/841 00		**L-986**		IL/66/67/5	420.00	12-C/12-C	177.80	18.70-10.30/18.70-14.50	12/12		04+04	Yes	Meritor
19842/843 00		**L-973**		FU/4/5/4	420.00	12-C/12-C	219.20	18.70-14.50/18.70-10.30	12/12		04+04	Yes/Si	Meritor
19844/845 00		**L-996**		MB/104/105/1	360.00	06-E/08-B	160.00	13.50-11.30/13.50-8.00	06/08	08x15	04+04	Yes/Si	Mercedes-Benz
19844/845 20		**L-835**		MB/113/114/1	364.00	06-E/08-B	160.00	15.50-13.30/15.50-10.00	06/08	08x15	04+04	Yes/Si	Mercedes-Benz
19847/848 00		**L-1032**		PB/18/19/1	410.00	12-E/12-I	220.00	17.50-15.70/17.40-6.40	12/12	10x18	04+04	No	Auwarter, Kässbohrer, Perrot, Van Hool
19849/850 00		**L-1031**		PB/16/17/1	410.00	08-A/08-L	160.00	17.40-6.40/17.50-15.70	08/08	10x18	04+04	No	Auwarter, Kässbohrer, Menarini, Perrot
19885/886 00		**L-1049**	VV/309	VL/83/84/1	394.00	09-A/12-E	239.50	19.00-11.70/19.00-14.80	12/09	10-10	04+04	Yes/Si	Volvo
19887 00				CW/11/1	394.00	16-B	177.80	19.50/12.80	16		08	Yes/Si	Ford, Iveco
19888/889 00				DF/36/37/1	420.00	12-C/12-C	175.00	18.70-11.40/18.80-16.00	12/12	10-10	04+04	Yes/Si	DAF
19890/891 00				DF/32/33/1	420.00	16-B/16-B	200.00	18.80-16.00/18.70-11.40	16/16	10-10	04+04	Yes/Si	Bova, DAF
19892/893 00		**L-1040**		SJ/26/27/1	355.00	10-A/10-A	200.00	18.50-9.10/18.60-14.40	10/10	08x18	04+04	Yes/Si	SAE (Dupillier), SAF/Sauer, Trailor
19896 00	4311-J	**L-358-J**		AX/14/6	419.00	14-C	177.80	18.60	14	10-08	08	Optional	Autocar, Brockway, Chevrolet Truck, Dodge Truck, Eaton Brakes, Ford Truck, GMC Truck, International

WVA	FMSI	LonaFlex.	FRAS-LE	BFMC					#			WI - ID	
19897/898 00	4625-B	**L-741-B**			419.00	16-B/16-B	177.80	18.10-8.40/18.20-13.10	16/16		04+04	Yes/Si	Ford
19899 00	4311-G	**L-358-G**			419.00	10-A	177.80	18.60	10	10-08	08	Optional	FDW Truck, Standard Forge
19900/901 00				DF/34/35/1	420.00	08-A/08-A	150.00	18.70-11.40/18.80-16.00	08/08	10-10	04+04	Yes/Si	DAF, Optare
19902/903 00		**L-815**		BC/100/101/1	360.00	08-A/10-A	199.50	17.50-11.50/17.50-9.30	08/10	08x15	04+04	Yes/Si	BPW, Gorica, Viberti
19908/909 00		**L-818**		RW/21/22/1	350.00	10-B/10-B	200.00	18.30-10.40/18.40-14.60	10/10	10-10	04+04	Yes/Si	Meritor, Samro, Zorzi
19914/915 00				DF/38/39/1	420.00	16-B/16-B	240.00	18.70-11.40/18.80-16.00	16/16	10-10	04+04	Yes/Si	DAF, Optare
19918 00		**L-628**		FI/124/1	360.00	18-E	170.00	14.00	18	08x16	04	No	Dennis, Iveco
19921 00				CW/12/1	394.00	16-B	200.00	19.50/12.80	16		08	Yes/Si	AWD, Ford, Iveco, Leyland/ DAF
19931 00		**L-308**	SV/229	SV/40/2	413.00	16-B	178.00	19.00	16	10-12	04	Yes/Si	Scania
19932 00		**L-309**	SV/230	SV/41/2	413.00	16-B	203.00	19.00	16	10-12	04	Yes/Si	Scania
19933 00		**L-310**	SV/231	SV/42/2	413.00	16-B	254.00	19.00	16	10-12	04	Yes/Si	Scania
19934 00		**L-1033**		RN/100/1	414.00	08-A	150.00	18.50	08	08x18	08	Yes/Si	Renault
19935 00		**L-742**		RN/101/1	414.00	08-A	175.00	18.50	08	08x18	08	Yes/Si	Heuliez, Renault
19938 00		**L-710**	VV/298	VL/87/1	410.00	12-E	175.00	18.30/12.60	12	10-10	08	Yes/Si	Volvo
19939 00		**L-711**	VV/299	VL/88/1	410.00	12-E	200.00	18.30/12.60	12	10-10	08	Yes/Si	Volvo
19940 00		**L-712**	VV/300	VL/89/1	410.00	12-E	225.00	18.30/12.60	12	10-10	08	Yes/Si	Volvo
19941 00		**L-713**	VV/297	VL/86/1	410.00	12-E	150.00	18.30/12.60	12		08	Optional	Volvo
19952/953 00				BC/104/105/1	360.00	08-A/10-A	160.00	17.50-9.30/17.50-11.50	10/08	08x15	04+04	Yes/Si	BPW, Viberti

Remarks/*Notas:*			
"#"	Blank column: item is supplied undrilled only. *Columna en blanco: el ítem es suministrado sin perforar.*		Length. *Desarrollo interno.*
	Drum diameter. *Diámetro tambor.*		Thickness. *Espesor.*
	Width. *Ancho.*		Pcs/Set. *Piezas/Juego.*
	Drilling Diagram. *Diagrama de Perforación.*		

FMSI	LonaFlex.	FRAS-LE	BFMC	WVA					#	T		WI - ID	
287	L-721				280.00	10-A	50.80	4.80	10	04-04	04	No	Agrale, Ford, Int'l Harvester
659-B	L-510				406.00	14-A	57.20	8.00	14	07-06	04	No	Brockway Truck. Diamond Reo, Dodge Truck, Dresser, GM, International, Volkswagen
855	L-525				229.00	10-A	43.00	4.40	10	04-04	04	No	Austin, Ford (UK), GM
881	L-123	**VW/264**	VN/2/1	10030 00	230.00	08-F	30.20	4.00	08	11-05	04	No	Volkswagen
882-A	L-124	**VW/262**	VN/7/1	11268 00	230.00	10-A	40.00	4.00	10	11-05	04	No	Volkswagen
1193	L-863				381.00	01-SF	101.60	9.50			04	No	Int'l Harvester
1196	L-864				406.00	01-SF	127.00	9.50			04	No	Dodge Truck, Int'l Harvester
1199	L-866				406.00	01-SF	152.40	9.50			04	No	Dodge Truck, Ford Truck, Int'l Harvester, Mack Truck
1219	L-122				280.00	10-A/12-A	50.80	4.80	10/12	04-05	2 + 2	No	Ford, Kaiser-Frazer, StU.D. ebaker, Willys
1230	L-867				381.00	01-SF	127.00	9.50			04	No	Mack Truck
1252	L-722				381.00	14-A	127.00	12.70	14	08-07	04	No	Chevrolet Truck, Diamond Reo, Dodge Truck, Ford Truck, Int'l Harvester
1254	L-724				406.00	01-SF	127.00	12.70			04	No	Int'l Harvester
1255	L-868				406.00	01-SF	152.40	12.70			04	No	Chevrolet Truck, Ford Truck, GMC Truck, Int'l Harvester
1276	L-869				406.00	14-A	63.50	8.00	14	07-	04	No	Dodge Truck, Ford Truck
1280	L-870				381.00	14-A	88.90	8.00	14	07-06	04	No	Chevrolet Truck, Dodge Truck, Ford Truck, GMC Truck, Int'l Harvester
1290	L-871				381.00	01-SF	75.40	9.50			04	No	Chevrolet Truck, Dodge Truck, Ford Truck, GMC Truck
1294	L-872				356.00	14-A	63.50	8.00	14	07-	04	No	Int'l Harvester
1302	L-1055		MB/51/1	19160 00	440.00	08-A	170.00	15.00	08	08x18	08	No	Mercedes-Benz
1304	L-509	**MB/181**	MB/66/1	19182 00	418.00	08-B	160.00	14.80	08	13-10	08	Optional	Mercedes-Benz
1305	L-501	**MB/180**	MB/65/1	17105 00	418.00	08-A	140.00	14.80	08	13-10	08	Optional	Mercedes-Benz
1307	L-766				381.00	14-A	88.90	10.70	14	10-08	04	No	Chevrolet Truck, GMC Truck, Dodge Truck, Ford Truck, International, Rockwell Axle
1308	L-105				381.00	14-A	101.60	10.70	14	10-07	04	No	Autocar, Chevrolet Truck, Eaton Brakes, Ford Truck, GMC Truck, International, Mack Truck, Rockwell Axle
1310	L-874	**MB/140**	MB/68/1	17298 00	418.00	08-A	120.00	15.00	08	08x15	08	Optional	Auwarter, Mercedes-Benz
1312	L-102	**MB/164**	MB/55/1	15123 00	408.00	08-A	80.00	10.00	08	13-10	08	No	Mercedes-Benz
1313	L-101	**MB/161**	MB/48/1	17059 00	408.00	08-A	100.00	10.00	08	13-10	08	No	Mercedes-Benz
1317	L-348	**MB/176**	MB/56/2	17259 00	408.00	08-A	120.00	10.00	08	13-10	08	No	Mercedes-Benz
1320	L-522	**MB/186**	MB/72/73/1	15580/581 96	300.00	12-A/14-A	98.00	9.80	12/14	06x10	02+02	Optional	Mercedes-Benz
1334		**F/1093**	NN/46		322.40	01-SF	100.00	11.20			04	no	Hino
1335	L-791		NN/52/1	19623 00	406.00	12-G	178.00	12.70	12		08	No	Hino
1350					203.00	01-SF	34.20	4.30			04	No	Ford, Mercury
1352	L-478	**VW/275**			250.00	08-A/10-A	54.80	6.00	08/10	11-05	02+02	No	Volkswagen
1354	L-645	**VW/274**			180.00	08-A	29.80	5.00	08	11-05	04	No	Volkswagen
1366					220.00	01-SF	40.00	6.00			04	No	Chrysler, Dodge, Plymouth
1402	L-646	**VW/276**			200.00	10-A	38.60	5.20	10	11-05	04	No	Ford, Volkswagen
1405	L-117	**CB/40**			200.00	10-A	45.00	4.80	10	04-04	04	No	GM
1410	L-772		FH/100 F		320.00	06-A	110.00	11.50	06	10-	08	Yes/Si	International Truck, Mitsubishi Fuso, U.D. , Nissan
1416		**F/747**			320.00	12-A	75.00	8.00	10		04	No	Chev/GMC Truck, Isuzu Truck
1417					320.00	10-A	75.00	9.80	10		04	Yes/Si	Izusu
1418	L-767		IZ/28/1		410.00	10-N	140.00	15.80	10		08	Optional	Chev/GMC Truck, Isuzu Truck
1419	L-780	**F/784**			400.00	12-B	154.00	15.00	12		08	Yes/Si	Hino Bus, International, Mitsubishi, U.D.
1422	L-779	**F/783**			400.00	10-O	120.00	15.00	08		08	Yes/Si	Hino Bus, International, Mitsubishi, U.D.

FMSI	LonaFlex.	FRAS-LE	BFMC	WVA					#	T		WI - ID	
1434	L-770		FH/100 R		320.00	06-A	130.00	11.50	06		08	Yes/Si	International Truck, Mitsubishi Fuso, U.D. ,Nissan
1455	L-773				320.00	16-M	119.90	12.90	14		04	Yes/Si	Chevrolet Truck, GMC Truck, Isuzu
1458	L-774				320.00	14-A	109.70	11.50	14		04	Yes/Si	Chevrolet Truck, GMC Truck, Isuzu
1464	L-1057				320.10	06-A	135.00	12.00	06		08	Yes/Si	Nissan U.D.
1467	L-404	**F/766**			325.00	12-A	74.50	9.50	12		04	No	Mitsubishi
1471	L-777	**F/781**			400.00	10-O	102.00	15.00	10		08	Yes/Si	Hino Commercial
1478	L-750	**F/767**			393.70	12-A	88.90	9.00	12		04	Yes/Si	Nissan
1482	L-402	**F/763**			325.00	12-A	100.00	11.20	12		04	Yes/Si	Isuzu
1490	L-800	**F/925**		17406 00	400.00	06-A	130.00	15.00	06		08	No	Nissan
1501	L-1053				320.00	06-A	120.00	12.00	06		08	Yes/Si	Mitsubishi Fuso
1502	L-1054				320.00	06-A	140.00	12.00	06		08	Yes/Si	Mitsubishi Fuso
1534	L-403	**F/764**		17413 00	325.00	16-I	120.00	11.00	16		04	Yes/Si	Isuzu
2006	L-518				280.00	10-A/14-A	50.80	4.80	10/14	04-04	02+02	No	Chevrolet, Chevrolet Truck, Chrysler, Dodge, Dodge Truck, GM, GMC Truck, Oldsmobile, Plymouth, Pontiac
2011	L-121				229.00	08-A/12-A	44.50	4.80	08/12	04-05	02+02	No	Ford, Nash, Willys
2032	L-110				381.00	14-A	101.60	9.50	14	07-06	04	No	Chevrolet Tuck, Divco, Dodge Truck, Ford, Ford Truck, GM, GMC Truck, Int'l Harvester
2038	L-875				280.00	10-A/10-A	50.80	4.80	10/10	04-04	02+02	No	Ford
2039	L-146				356.00	10-A/12-A	63.50	6.40	10/12	05-05	02+02	No	Chevrolet Truck, GM, GMC Truck
2042	L-147				330.00	12-A/12-A	63.50	6.40	12/12	07-06	02+02	No	Chevrolet Truck, Dodge Truck, GMC Truck, Jeep, StU.D.ebaker
2053	L-877				280.00	10-A/10-A	57.20	4.80	10/10	04-04	02+02	No	Ford, Int'l Harvester
2060	L-202				356.00	12-A/12-A	63.50	6.40	12/12	07-06	02+02	No	Chrysler, Divco, Dodge Truck, Ford, Ford Truck
2065					279.00	01-SF	69.90	4.80			02+02	No	Chevrolet, Chev Truck, Chrysler, Dodge, Dodge Truck, Plymouth, Pontiac
2066	L-878				254.00	01-SF	63.50	4.80			02+02	No	American Motors
2095	L-630				255.30	12-A	50.80	4.80	12	04-05	02	No	Divco, Ford, Ford Truck
2131	L-544				305.00	10-A/10-A	63.50	6.40	10/10	04-	02+02	No	Ford Truck
2137	L-545				305.00	10-A/10-A	76.20	6.40	10/10	04-	02+02	No	Ford Truck
2157					33.00	12-A/14-A	88.90	6.40/6.40	12/14		02+02	No	
4311	L-358				419.00	04-A	177.80	18.60	04	3/8"	08	Optional	Mack Truck
4317	L-775				419.00	04-A	152.40	18.60	04		08	No	
4350	L-881				508.00	06-A	203.20	18.60	06	3/8"	08	No	K-B Axle
4375	L-587				438.00	10-A	101.60	12.70	10	8-8	04	No	Eaton Brakes, Terex, Wabco
4398	L-882				368.00	04-A	127.00	18.60	04	3/8"	08	Optional	Flxible
4435		**F/1089**			322.00	01-SF	114.30	11.00			04	No	Hino
4462	L-833-B				514.00	14-B/14-B	177.80	18.10-8.80/18.10-12.30	14/14	08-10	04+04	No	Easton, Rockwell Axle
4468	L-698				419.00	04-A	177.80	18.50	04	3/8"	08	Optional	Black Diamond, Dana, Dorsey, General Trailer, K-B Axle, Loadcraft, Lufkin, Miller, Nabors, Phelan, Rogers
4470	L-884				514.00	12-A/12-A	127.00	18.40-9.10/18.50-12.70	12/12	10-10	04+04	No	Eaton Brakes, Rockwell Axle
4480	L-885				559.00	14-B/14-B	177.80	19.10-11.90/19.00-9.10	14/14	10-10	04+04	No	Caterpillar, Rockwell Axle
4514	L-136		IL/68/69/1	19088/089 00	419.00	08-A/08-A	152.40	18.10-9.60/18.20-14.30	08/08	08-10	04+04	Optional	Chevrolet Truck, Dodge Truck, Eaton Brakes, K-B Axle, Rockwell Axle, Standard Forge, Trailc
4515	L-157		IL/66/67/1		419.00	12-C/12-C	177.80	18.10-9.60/18.20-14.30	12/12	08-10	04+04	Optional	Black Diamond, Brockway, Chevrolet Truck, Eaton Brakes, GMC Truck, Mercedes-Benz, Rockwell Axle

FMSI	LonaFlex.	FRAS-LE	BFMC	WVA					#			WI - ID	
4524	L-503				419.00	08-A/08-A	127.00	18.10-9.60/18.20-14.30	08/08	08-10	04+04	Optional	Chevrolet Truck, Diamond Reo, Dodge Truck, Eaton Brakes, Flxible, GMC Truck, K-B Axle, Rockwell Axle
4525	L-886				457.00	01-SF	203.20	18.50			08	No	Eaton Brakes
4536	L-504				311.00	06-A/06-A	139.70	17.90-9.20/18.00-15.40	06/06	08-09	04+04	Optional	Rockwell Axle, Standard Forge
4544	L-505				311.00	04-A	139.70	18.60	04	3/8"	08	Optional	Black Diamond, Dana, Dorsey, Fontaine, Loadcraft, Lufkin, Phelan, Schertzer, Standard Forge, Timpte
4549	L-887				419.00	08-A/08-A	101.60	18.10-9.60/18.20-14.30	08/08	08-10	04+04	Optional	Chevrolet Truck, Duplex Truck, Flxible, GMC Truck, Mack Truck, Rockwell Axle, Standard Forge, Trailco
4551	L-696		FU/4/5/1		419.00	12-C/12-C	219.10	18.10-9.60/18.20-14.30	12/12	08-10	04+04	Optional	Black Diamond, Dana, Eaton Brakes, Fruehauf, Hobbs, K-B Axle, Lufkin, Rockwell Axle, Standard Forge
4552	L-888				419.00	16-B/16-B	254.00	18.10-9.60/18.20-14.30	16/16	08-08	04+04	Optional	Eaton Brakes, Great Dane, Hobbs, K-B Axle, Rockwell Axle, Standard Forge, Timpte, Trailmobile
4561	L-821				413.00	14-A	88.90	11.10	14	07-07	04	No	Diamond Reo, Ford Truck, Rockwell Axle
4562	L-889				381.00	12-A	88.90	9.50	12	08-07	04	No	Ford Truck
4591	L-568				311.00	12-B/12-B	190.50	17.90-13.20/17.90-11.90	12/12	08-08	04+04	Optional	Dana, Eaton Brakes, Great Dane, Highway Mfg,, Hyster, Phelan, Rogers, Schertzer, Standard Forge, Strick
4592					368.00	06-K	254.00	18.60	06	3/8"	08	Yes/Si	Flxible, Prevost, Rockwell Axle
4595	L-892				381.00	08-A	177.80	18.60	08	10-08	08	Optional	Chevrolet Truck, GMC Truck
4596	L-560				381.00	14-A	152.40	12.70	14	08-09	04	Optional	Chevrolet Truck, Dodge Truck, Ford Truck, GMC Truck, Int'l Harvester
4597	L-563				381.00	14-A	177.80	12.70	14	08-09	04	No	Chevrolet Truck, Dodge Truck, Ford Truck, GMC Truck, Int'l Harvester
4601					514.00	08-A/08-A	101.50	18.40-10.90/18.50-14.70	08/08	10-	04+04	No	Autocar, Rockwell Axle
4602	L-857		CW/4/1	19384 00	381.00	12-C	177.80	18.60/11.90	12	10-10	08	Optional	Autocar, Chevrolet Truck, Dodge Truck, Ford Truck, GMC Truck, International, Mack Truck, Rockwell Axle
4605	L-845		CW/3/1	19502	381.00	08-A	152.40	18.60/11.90	08	10-9	08	Optional	Autocar, Chevrolet Truck, Diamond Reo, Dodge Truck, Ford Truck, GMC Truck, International, Rockwell Axle
4607	L-822				311.00	04-A	190.50	18.60	04	3/8"	08	Optional	Black Diamond, Dana, Fruehauf, Great Dane, Hyster, Miller, Nabors, Phelan, Rogers, Standard Forge, Strick
4610	L-894		CW/1/1		381.00	08-A	101.60	18.60/11.90	08	10-09	08	No	Chevrolet Truck, GMC Truck, Mack Truck, Rockwell Axle
4615			CW/2/1		381.00	08-A	127.00	18.60/11.90	08	10-09	08	Optional	Autocar, Brockway Truck, Diamond Reo, Dodge Truck, Ford Truck, International, Rockwell Axle, White Truck
4618	L-895		CW/7/1		660.00	24-D	203.20	18.60/12.60	24	10-	08	No	Rockwell Axle
4621	L-897				311.00	01-SF	190.50	18.40/14.00			08	Optional	Rockwell Axle, Trailmobile
4622	L-589				508.00	12-D	190.50	18.80	12	3/8"	08	No	Rockwell Axle, Terex
4639	L-900				381.00	14-A	127.00	12.70	14	07-07	04	No	Chevrolet Truck, GMC Truck
4649	L-856				311.00	10-B/10-B	203.20	17.70-7.70/17.90-15.20	10/10	08-08	04+04	Optional	Fruehauf, Hobbs
4654	L-901				419.00	08-A/08-A	127.00	18.10-9.00/18.20-13.20	08		04+04	Optional	Ford Truck, Mack Truck, Rockwell Axle
4656	L-131	**MB/190**	MB/74/75/1	19579/580 00	410.00	08-B/10-C	160.00	17.70-15.20/17.60-7.80	10/08	08x20	04+04	Yes/Si	Mercedes-Benz
4657	L-133	**MB/191**	MB/76/77/1	19581/582 00	410.00	08-B/10-C	220.00	17.70-15.20/17.60-7.80	10/08	08x20	04+04	Yes/Si	Mercedes-Benz
4662	L-811	**VV/287**	VL/74/75/1	19560/561 00	413.00	10-D/12-F	152.40	19.00-11.70/19.00-14.80	12/10		04+04	Optional	Volvo
4663	L-706	**VV/250**	VL/72/73/1	19467/468 00	394.00	09-A/12-E	177.80	19.00-11.70/19.00-14.80	12/09		04+04	Optional	Volvo
4664	L-664	**VV/289**	VL/76/77/1	19562/563 00	394.00	09-A/12-E	203.20	19.00-11.70/19.00-14.80	12/09		04+04	Yes/Si	Volvo
4665	L-902				381.00	06-A	152.40	18.00/12.30	06	3/8"	08	Yes/Si	GMC Coach
4666	L-903				381.00	08-K	254.00	18.00/12.30	08	3/8"	08	Yes/Si	GMC Coach

FMSI	LonaFlex.	FRAS-LE	BFMC	WVA					#	T		WI - ID	
4670	L-842				311.00	10-B/10-B	190.50	18.00-14.70/17.90-9.20	10/10	10-	04+04	Optional	Miller, Rockwell Axle
4671	L-552	**MB/184**	MP/31/1	19486 00	410.00	08-B	160.00	17.30/12.10	08	08x20	08	Yes/Si	Mercedes-Benz
4672	L-227	**MB/188**	MP/36/1	19488 00	410.00	08-B	220.00	17.30/12.10	08	08x20	08	Yes/Si	Mercedes-Benz
4674	L-904				419.00	16-C	219.10	18.60	16	10-08	08	Yes/Si	Eaton Brakes
4690	L-905				384.00	06-A/06-A	152.40	20.40-15.90/20.40-13.00	06/06	3/8"	04+04	Yes/Si	GMC Coach
4691	L-906				384.00	08-K/08-K	254.00	20.40-15.90/20.40-13.00	08/08	3/8"	04+04	Yes/Si	GMC Coach
4692	L-813				311.00	10-B/10-B	190.50	18.00-15.40/17.90-9.20	10/10	10-08	04+04	Optional	Dana, Standard Forge
4693	L-728	**FD/83**			381.00	08-A	101.60	18.30/11.60	08	10-10	08	Yes/Si	Ford, GM, Volkswagen
4694	L-652-B	**MB/177**	MP/29/1	17682 00	410.00	08-A	120.00	17.30/12.10	08	13-10	08	Yes/Si	Mercedes-Benz
4695	L-651	**MB/183**	MP/30/1	17683 00	410.00	08-A	140.00	17.30/12.10	08	08x20	08	Yes/Si	Mercedes-Benz
4696	L-705	**VV/248**	VL/70/71/1	17664/665 00	413.00	08-A/10-A	127.00	19.00-11.70/19.00-14.80	10/08		04+04	Optional	Volvo
4697	L-652	**MB/182**			410.00	08-A	120.00	17.30/12.10	08	13-10	08	Yes/Si	Mercedes-Benz
4698	L-665	**VV/290**	VL/81/82/1	19799/800 00	394.00	09-A/12-E	254.00	19.00-11.70/19.00-14.80	12/09		04+04	Yes/Si	Volvo
4700	L-907				311.00	06-A/06-A	101.60	17.90-13.20/17.90-11.90	06/06	08-	04+04	Optional	Dexter
4701	L-908				419.00	12-C/12-C	177.80	21.70-11.10/21.80-16.60	12/12	10-	04+04	Optional	Dana
4702	L-222	**FD/86**			381.00	08-A/08-A	101.60	18.70-9.60/18.80-14.70	08/08	10-10	04+04	Yes/Si	Ford, GM, Iveco, Volkswagen
4703	L-909				381.00	08-A/08-A	127.00	18.70-9.60/18.80-14.70	08/08	10-10	04+04	Optional	Rockwell
4704	L-223	**FD/87 VV/308**			381.00	12-A/12-A	152.40	18.70-9.60/18.80-14.70	12/12	10-10	04+04	Yes/Si	Ford, Iveco, Volkswagen
4705	L-224	**FD/88 VV/306**			381.00	14-E/14-E	177.80	18.70-9.60/18.80-14.70	14/14	10-10	04+04	Yes/Si	Ford, Guerra, Iveco, Randon, Volkswagen
4706	L-966	**FD/89**			381.00	16-B/16-B	203.20	18.70-9.60/18.80-14.70	16/16	10-10	04+04	Yes/Si	Rockwell
4707	L-641				419.00	14-E/14-E	177.80	21.00-10.30/21.10-16.60	14/14	10-10	04+04	Optional	GM, International, Randon, Rockwell
4708	L-910				419.00	14-F/14-F	177.80	20.00-15.20/19.90-9.60	14/14	10-10	04+04	Optional	Eaton Brakes
4709	L-812				419.00	14-F	177.80	21.60/12.70	14	10-10	08	Optional	Eaton Brakes
4710	L-640	**VV/307**			381.00	16-B/16-B	219.10	18.80-14.70/18.70-9.60	16/16	10-10	04+04	Yes/Si	Volvo
4711	L-643				419.00	14-E/14-E	219.10	21.00-10.30/21.10-16.60	14/14	10-09	04+04	Optional	Rockwell
4715	L-846				419.00	12-A/12-A	152.40	21.00-10.30/21.10-16.60	12/12	10-09	04+04	Optional	Rockwell
4716	L-911	**AC/10**			381.00	10-A	152.40	22.20/14.00	10	10-09	08	Optional	Eaton
4717	L-912	**AC/11**			381.00	14-F	219.10	22.20/14.00	14	10-10	08	No	Eaton
4718	L-639				419.00	14-E/14-E	203.20	21.00-10.30/21.10-16.60	14/14	10-10	04+04	Optional	Randon, Rockwell
4719	L-850				419.00	10-A	127.00	22.00/13.10	10	10-	08	Optional	Eaton
4720	L-642				419.00	08-A/08-A	127.00	21.00-10.30/21.10-16.60	08/08	10-10	04+04	Optional	Rockwell
4725	L-814				419.00	10-A	152.40	22.00/13.10	10	10-	08	Optional	Eaton
4726	L-913				419.00	16-B	219.10	21.60/12.70	16	10-10	08	Optional	Eaton
4728	L-914				419.00	16-B/16-B	219.10	21.00-10.30/21.10-16.60	16/16	1/4R	04+04	Yes/Si	Rockwell
4729	L-915				381.00	08-A	101.60	20.60/13.20	08	10-	08	Optional	Dana
4734	L-1058				410.00	15-B	179.60	16.20	15		08	Yes/Si	Chevrolet Truck, GMC Truck
4736	L-768		NN/61/1	19683 00	406.00	12-G	203.20	15.50	12		08	Optional	Hino
4737	L-792		NN/60/1	17341 00	406.00	08-A	127.00	15.50	08		08	Yes/Si	Hino
4738	L-788	**F/837**			410.00	14-K	200.00	15.00	14		08	Yes/Si	Mitsubishi, Hyundai
4739	L-806	**F/939**			412.00	10-A	150.00	15.60	10		08	Yes/Si	Mitsubishi
4741	L-804	**F/937**			412.00	15-D	220.00	15.60	15		08	Yes/Si	Nissan / U.D.
8017	L-916				185.00	01-SF	30.00	4.00			04	No	Fiat, Yugo
8020	L-917		FD/50/51/1	13057/058 00	254.00	10-A/12-A	44.50	4.80	22	ESPECIAL	02+02		Peugeot, Simca
8026	L-1029		OP/20	13189 00	200.00	01-SF	45.00	5.00			04	No	Opel
8027	L-918				230.00	12-A	50.00	4.80	12		04	No	Opel
8049	L-321				230.00	08-A/10-A	35.00	4.80	08/10	04-04	02+02	No	Ford, Huber-Warco, Renault
8078	L-508	**VW/272**	VN/11/1	11293 00	248.00	10-A	45.00	4.00	10	11-05	04	No	Volkswagen

FMSI	LonaFlex.	FRAS-LE	BFMC	WVA					#	T		WI - ID	
8080	L-477	**VW/270**	VN/12/1	13193 00	250.00	10-A	54.80	5.00	10	11-05	04	No	Volkswagen
8081	L-476	**VW/271**	VN/13/1	11259 00	250.00	10-A	44.80	5.00	10	11-05	04	No	Volkswagen
8124	L-919				229.00	08-A/10-A	40.00	5.00	08/10		02+02	No	Renault
1245-A	L-662				381.00	14-A	76.20	8.00	14	07-06	04	No	Chevrolet Truck, Diamond Reo, Dodge Truck, Ford Truck, GMC Truck, Int'l Harvester
1245-C	L-662-C				381.00	14-G	76.20	8.00	14	07-06	04	No	Chevrolet Truck, Dodge Truck, Ford Truck, GMC Truck, Int'l Harvester
1280-B	L-870-B				381.00	14-G	88.90	8.00	14	07-06	04	No	Chevrolet Truck, GMC Truck, Int'l Harvester
1308-A	L-105-A				381.00	14-A	101.60	10.70	14	08-07	04	No	Autocar, Chevrolet Truck, Ford Truck, GMC Truck, International, Kenworth, Mack Truck, White Truck
1308-TT	L-105-TT				381.00	14-A	101.60	10.70/10.30	14	10-07	04	No	Chevrolet Truck, Ford Truck, GMC Truck, Freightliner, Kenworth, Mack, Rockwell
1331-A	L-778	**F/782**			400.00	10-P	130.00	15.00	10		08	Yes/Si	Hino Commercial
1418-A	L-787	**F/836**			410.00	10-A	140.00	15.00	10		08	Yes/Si	Mitsubishi, Hyundai
1443-TT	L-829				381.00	14-A	100.40	7.8/14.2/7.8	14	10-7	04	No	Eaton Brakes
1477-TT	L-920-TT		BC/36/1 C/16.80	19032 90	420.00	10-A	180.00	16.80/10.00	10		08	Yes/Si	Theurer Trailer
2006-T	L-387				280.00	10-A/14-A	50.80	4.80/6.00-5.20	10/14	04-05	02+02	No	Agrale, Dodge, Dodge Truck, Ford, GM, Plymouth
2012-B					254.00	10-A/10-A	44.50	4.80/4.80	10/10		02+02	No	
2012-BT	L-549				254.00	10-A/10-A	44.50	4.80/6.00-5.20	10/10	04-04	02+02	No	Ford, Ford Truck, Mercury
2026-AT	L-529				308.00	08-A/10-A	50.80	6.40/8.00-7.20	08/10	04-05	02+02	No	Chrysler, Ford, Puma
2026-T	L-189				308.00	10-A/10-A	50.80	6.40/7.50-6.70	10/10	04-05	02+02	No	Ford, Ford Truck, GMC Truck
2038-T	L-875-T				280.00	10-A/10-A	50.80	4.80/6.00-5.20	10/10	04-04	02+02	No	Dodge Truck
2042-A	L-533				330.00	10-A/14-A	63.50	6.40	10/14	07-06	02+02	No	Agrale, Chrysler, Ford
2051-A					254.00	10-A/10-A	57.20	4.80/4.80	10/10		02+02	No	
2051-AT	L-862-AT				254.00	10-A/10-A	57.20	4.80/6.00-5.20	10/10	04-04	02+02	No	Ford, Mercury
2053-T	L-187				280.00	10-A/10-A	57.20	4.80/6.00-5.20	10/10	04-04	02+02	No	Dodge Truck, Ford
2080-T	L-500				280.00	08-A/12-A	63.50	5.20/6.00-5.20	08/12	04-05	02+02	No	Agrale, Ford, GM, Lincoln, Mercury
2121-T	L-547				280.00	08-A/10-A	57.20	5.20/6.00-5.20	08/10	04-05	02+02	No	Ford, Lincoln, Mercury
2146-T	L-922-T				305.00	01-SF	63.50	4.80/6.40-5.60			02+02	No	Dodge Truck, Ford Truck, Int'l Harvester
2157-T	L-923-T				330.00	12-A/14-A	88.90	6.40/9.50-8.00	12/14	07-06	02+02	No	Chevrolet Truck, GMC Truck
2165-T					225.00	01-SF	44.20	5.00/6.60			02+02	No	Buick, Cadillac, Chevrolet, Oldsmobile, Pontiac
2171-T					308.00	01-SF	88.90	5.60/7.20-6.40			02+02	No	Dodge Truck, Ford Truck
287-T	L-721-T				280.00	10-A/10-A	50.80	4.80/6.00-5.20	10	04-04	02+02	No	Dodge Truck, Ford Truck, Int'l Harvester
4195-A	L-378-A				419.00	06-A	139.70	18.60	06	3/8"	08	No	Eaton Brakes, Randon
4195-B	L-378				419.00	10-A	139.70	18.60	10	10-14	08	No	Brockway Truck, Eaton Brakes, Guerra, Randon
4223-A	L-820				419.00	10-A	127.00	18.60	10	10-10	08	Optional	Autocar, Eaton Brakes, Ford Truck, International, Oshkosh, White Truck
4227-E	L-924-E				368.00	04-A	101.60	18.60	04	3/8"	08	Optional	Flxible, GMC Coach
4228-F	L-925-F				368.00	04-A	152.40	18.60	04	3/8"	08	Optional	Flxible, Rockwell Axle
4311-B	L-358-B				419.00	06-A	177.80	18.60	06	3/8"	08	Optional	Mack Truck
4311-C	L-358-C				419.00	16-C	177.80	18.60	16	10-08	08	Optional	Brockway Truck, Eaton Brakes, Standard Forge
4311-G	L-358-G			19899 00	419.00	10-A	177.80	18.60	10	10-08	08	Optional	FDW Truck, Standard Forge
4311-J	L-358-J		AX/14/6	19896 00	419.00	14-C	177.80	18.60	14	10-08	08	Optional	Autocar, Brockway, Chevrolet Truck, Dodge Truck, Eaton Brakes, Ford Truck, GMC Truck, International
4317-C	L-775-C				419.00	04-A	152.40	18.60	04	3/8"	08	Optional	Mack Truck

FMSI	LonaFlex.	FRAS-LE	BFMC	WVA					#	T		WI - ID	
4317-G	L-775-G				419.00	10-A	152.40	18.60	10	10-08	08	Optional	Chevrolet Truck, Diamond Reo, Eaton Brakes, GMC Truck, White Truck
4354-A	L-588				508.00	06-A	152.40	18.80	06	3/8"	08	No	Terex
4398-B	L-882-B				368.00	04-E	127.00	18.60	04	3/8"	08	No	Flxible, Flyer, GMC Coach, Motor Coach, Prevost
4462-A	L-883-B				514.00	14-B/14-B	177.80	18.10-8.80/18.10-12.30	14/14	10-	04+04	No	Wabco
4471-A	L-926-A				457.00	06-A/06-A	177.80	18.00-10.70/18.10-15.20	06/06	3/8"	04+04	No	Rockwell Axle
4471-B	L-926-B				457.00	16-B/16-B	177.80	18.00-10.70/18.10-15.20	16/16	10-10	04+04	No	Autocar, Brockway Truck, Ford Truck, GMC Truck, International, Kenworth, Mack Truck, Rockwell Axle
4504-A	L-927-A				381.00	08-A	152.40	18.40/13.20	08	10-08	08	Optional	Ford Truck
4505-A	L-727				381.00	12-C	177.80	18.40/13.20	12	10-08	08	Yes/Si	Ford, Ford Truck
4514-F	L-136-A				419.00	08-A/08-A	152.40	18.10-9.60/18.20-14.30	08/08	10-10	04+04	Optional	Chrysler, Fiat, FNM, Ford, GM, GMC Coach, Guerra, International, Mercedes-Benz, Volkswagen
4514-G	L-136-K				419.00	12-A/12-A	152.40	18.10-9.60/18.20-14.30	12/12	10-10	04+04	Optional	Autocar, Chevrolet Truck, Dodge Truck, GMC Truck, International, Iveco, Randon, Rockwell Axle
4514-G WH					419.00	12-A/12-A/12-N	152.40	18.10-9.60/18.20-14.30	12/12/12	10-10	04+02+02	Yes	Iveco
4515-A	L-157-F				419.00	06-A/06-A	177.80	18.10-9.60/18.20-14.30	06/06	3/8"	04+04	Optional	Fontaine, Rockwell Axle, Rogers, Standard Forge
4515-B	L-157-G				419.00	04-A/04-A	177.80	18.10-9.60/18.20-14.30	04/04	3/8"	04+04	Optional	Dana, Standard Forge
4515-C	L-157-A		IL/66/67/3	19036/037 00	419.00	12-C/12-C	177.80	18.10-9.60/18.20-14.30	12/12	10-10	04+04	Optional	Dana, Fiat, FNM, FNV, Guerra, International
4515-E	L-157-E				419.00	16-B/16-B	177.80	18.10-9.60/18.20-14.30	16/16	10-10	04+04	Optional	Autocar, Brockway, Chevrolet Truck, Dodge Truck, GMC Truck, International, Mack Truck, Rockwell Axle
4515-F	L-157-N				419.00	12-C/12-C	177.80	18.10-9.60/18.20-14.30	12/12	1/4"	04+04	No	Rockwell Axle, Standard Forge
4515-G	L-157-O				419.00	14-E/14-E	177.80	18.10-9.60/18.20-14.30	14/14	10-10	04+04	Optional	Autocar, Chevrolet Truck, Ford Truck, GMC Truck, International, Mack Truck, Rockwell Axle, Standard Forge
4515-H	L-157-H				419.00	16-B/16-B	177.80	18.10-9.60/18.20-14.30	16/16	10-10	04+04	Optional	Mack Truck, Rockwell Axle
4524-A	L-503-A				419.00	08-A/08-A	127.00	18.10-9.60/18.20-14.30	08/08	1/4" B	04+04	Optional	Rockwell Axle
4524-B	L-502				419.00	08-A/08-A	127.00	18.10-9.60/18.20-14.30	08/08	10-10	04+04	Optional	Autocar, Chevrolet Truck, Dodge Truck, Fiat, GMC Truck, International, Mercedes-Benz, Rockwell Axle
4524-C	L-503-C				419.00	06-A/06-A	127.00	18.10-9.60/18.20-14.30	06/06	3/8"	04+04	Optional	Chevrolet Truck, Eagle, GMC Truck, Rockwell Axle
4527-B	L-928-B				457.00	06-A	177.80	18.40	06	3/8"	08	Optional	Eaton Brakes, Mack Truck
4528-A	L-929-A				381.00	08-A	127.00	18.50/13.40	08	10-08	08	Optional	Ford Truck
4536-A	L-504-A				311.00	06-A/06-A	139.70	17.90-11.90/17.90-13.20	06/06	08-08	04+04	Yes/Si	Eaton Brakes
4536-B	L-504-B				311.00	09-A/09-A	139.70	17.90-9.20/18.00-15.40	09/09	20-08	04+04	Optional	Dana, Fontaine, Standard Forge, Timpte
4541-B	L-930-B				368.00	04-E	203.20	18.60	04	3/8"	08	No	Flxible, GMC Coach, Motor Coach, Prevost, Rockwell Axle
4541-C					368.00	04-A	203.20	18.60	04	3/8"	08	Optional	Flxible
4549-A					419.00	08-A/08-A	101.6	18.20-14.30/18.10-9.60	08/08		04+04	Yes/Si	Mack Truck
4549-C	L-887-C				419.00	08-A/08-A	101.60	18.10-9.60/18.20-14.30	08/08	10-08	04+04	Optional	Chevrolet Truck, Crown Coach, GMC Truck, Mack Truck, Rockwell Axle, Timpte, Trailmobile
4551-B	L-696-B		FU/4/5/6		419.00	16-B/16-B	219.10	18.10-9.60/18.20-14.30	16/16	10-08	04+04	Optional	Great Dane, Rockwell Axle, Timpte, Trailmobile
4551-C	L-696-C				419.00	06-A/06-A	219.10	18.10-9.60/18.20-14.30	06/06	3/8"	04+04	Optional	Eagle
4551-E	L-696-E				419.00	14-E/14-E	219.10	18.10-9.60/18.20-14.30	14/14	10-08	04+04	Optional	Dana, K-B Axle, Rockwell Axle, Timpte
4551-Z	L-696-Z		FU/4/5/3	19369/370 00	419.00	12-C/12-C	219.10	18.20-14.30/18.10-9.60	12/12	10-10	04+04	Optional	Fruehauf, Lecinena, Meritor, ROR, Trailor, SAF/Sauer, Van Hool, York
4561-B	L-821-B				413.00	14-A	88.90	11.10	14	10-07	04	No	Ford Truck, Freightliner, Kenworth, Peterbilt, Rockwell Axle
4564-A	L-140				381.00	14-A	114.30	12.70	14	07-08	04	No	Chrysler, Dodge Truck, Ford

FMSI	LonaFlex.	FRAS-LE	BFMC	WVA					#			WI - ID	
4592-A	L-931-A				368.00	06-C	254.00	18.60	06	3/8"	08	Optional	Flxible, Flyer, GMC Coach, Rockwell Axle
4596-B	L-560-B				381.00	12-A	152.40	12.70	12		04	No	
4625-A	L-741-A				419.00	16-B/16-B	177.80	18.10-8.40/18.20-13.10	16/16	10-10	04+04	Optional	Chevrolet Truck, Ford Truck, GMC Truck, Rockwell Axle
4625-B	L-741-B			19897/898 00	419.00	16-B/16-B	177.80	18.10-8.40/18.20-13.10	16/16		04+04	Yes/Si	Ford
4633-A	L-899-A				514.00	18-D	177.80	19.30/13.60	18	10-	08	No	Mack Truck, Rockwell Axle, Wabco
4644-A	L-933-A		RW/1/2/5	19017/997 00	419.00	16-B/16-B	203.20	18.20-14.30/18.10-9.60	16/16	10-10	04+04	Yes/Si	DAF, Foden, Seddon Atkinson
4661-C	L-934-A				311.00	06-A/06-A	127.00	17.90-11.90/17.90-13.20	06/06		04+04	Yes/Si	Dexter
4715-A					419.00	12-A/12-A	152.40	21.00-10.30/21.10-16.60	12/12	1/4R	04+04	Yes/Si	Rockwell

Remarks/*Notas:*			
"#"	Blank column: item is supplied undrilled only. *Columna en blanco: el ítem es suministrado sin perforar.*		Length. *Desarrollo interno.*
	Drum diameter. *Diámetro tambor.*		Thickness. *Espesor.*
	Width. *Ancho.*		Pcs/Set. *Piezas/Juego.*
	Drilling Diagram. *Diagrama de Perforación.*		

LonaFlex.	FRAS-LE	BFMC	WVA	FMSI					#	T		WI - ID	
L-101	**MB/161**	MB/48/1	17059 00	1313	408.00	08-A	100.00	10.00	08	13-10	08	No	Mercedes-Benz
L-102	**MB/164**	MB/55/1	15123 00	1312	408.00	08-A	80.00	10.00	08	13-10	08	No	Mercedes-Benz
L-103-A	**FN/107**				429.00	28-A	140.00	12.00	28	13-14	04	No	FNM
L-104-A	**FN/106**				429.00	16-F	90.00	12.00	16	13-14	04	No	FNM
L-105-A				1308-A	381.00	14-A	101.60	10.70	14	08-07	04	No	Autocar, Chevrolet Truck, Ford Truck, GMC Truck, International, Kenworth, Mack Truck, White Truck
L-105-TT				1308-TT	381.00	14-A	101.60	10.70/10.30	14	10-07	04	No	Chevrolet Truck, Ford Truck, GMC Truck, Freightliner, Kenworth, Mack, Rockwell
L-105				1308	381.00	14-A	101.60	10.70	14	10-07	04	No	Autocar, Chevrolet Truck, Eaton Brakes, Ford Truck, GMC Truck, International, Mack Truck, Rockwell Axle
L-107	**SV/223**	SV/8/1	19075 00		413.00	12-B	178.00	19.00	12	10-12	08	Yes/Si	Guerra, Randon, Scania
L-110				2032	381.00	14-A	101.60	9.50	14	07-06	04	No	Chevrolet Tuck, Divco, Dodge Truck, Ford, Ford Truck, GM, GMC Truck, Int'l Harvester
L-114	**MB/155**	MB/20/1	15090 00		400.00	14-A	60.00	6.50	14	07-06	04	No	Mercedes-Benz
L-115	**MB/157**				280.00	08-A/14-A	63.50	5.50/7.00	08/08	04-05	02+02	No	Mercedes-Benz
L-117	**CB/40**			1405	200.00	10-A	45.00	4.80	10	04-04	04	No	GM
L-118	**MB/156-S/F**				254.00	01-SF	57.20	4.80			04	No	Mercedes-Benz
L-120	**DK/45**				230.00	10-A	50.00	5.00	10		04	No	
L-121				2011	229.00	08-A/12-A	44.50	4.80	08/12	04-05	02+02	No	Ford, Nash, Willys
L-122				1219	280.00	10-A/12-A	50.80	4.80	10/12	04-05	02+02		Ford, Kaiser-Frazer, Studebaker, Willys
L-123	**VW/264**	VN/2/1	10030 00	881	230.00	08-F	30.20	4.00	08	11-05	04	No	Volkswagen
L-124	**VW/262**	VN/7/1	11268 00	882-A	230.00	10-A	40.00	4.00	10	11-05	04	No	Volkswagen
L-131	**MB/190**	MB/74/75/1	19579/580 00	4656	410.00	08-B/10-C	160.00	17.70-15.20/17.60-7.80	10/08	08x20	04+04	Yes/Si	Mercedes-Benz
L-133	**MB/191**	MB/76/77/1	19581/582 00	4657	410.00	08-B/10-C	220.00	17.70-15.20/17.60-7.80	10/08	08x20	04+04	Yes/Si	Mercedes-Benz
L-135	**SV/222**	SV/7/1	15185 00		413.00	06-A	89.00	19.00	06	10-12	08	No	Scania
L-136-A				4514-F	419.00	08-A/08-A	152.40	18.10-9.60/18.20-14.30	08/08	10-10	04+04	Optional	Chrysler, Fiat, FNM, Ford, GM, GMC Coach, Guerra, International, Mercedes-Benz, Volkswagen
L-136-K				4514-G	419.00	12-A/12-A	152.40	18.10-9.60/18.20-14.30	12/12	10-10	04+04	Optional	Autocar, Chevrolet Truck, Dodge Truck, GMC Truck, International, Iveco, Randon, Rockwell Axle
L-136		IL/68/69/1	19088/089 00	4514	419.00	08-A/08-A	152.40	18.10-9.60/18.20-14.30	08/08	08-10	04+04	Optional	Chevrolet Truck, Dodge Truck, Eaton Brakes, K-B Axle, Rockwell Axle, Standard Forge, Trailc
L-140-A				4564	381.00	01-SF	114.30	12.70			04	No	Dodge Truck, Stuebaker Truck
L-140				4564-A	381.00	14-A	114.30	12.70	14	07-08	04	No	Chrysler, Dodge Truck, Ford
L-141	**VW/255**	MP/37/38/1	15817/823 00		324.00	10-A/12-A	96.50	12.00	10/12	13-	02+02	No	Volkswagen
L-142	**CB/53**				394.00	08-A	107.90	19.10/12.40	08	10-10	08	No	GM
L-144	**CB/54**				394.00	08-A	152.40	19.10/12.40	08	10-10	08	No	GM
L-145	**CB/55**				200.00	10-K/10-K	27.50	4.70	10/10		02+02	No	GM
L-146				2039	356.00	10-A/12-A	63.50	6.40	10/12	05-05	02+02	No	Chevrolet Truck, GM, GMC Truck
L-147				2042	330.00	12-A/12-A	63.50	6.40	12/12	07-06	02+02	No	Chevrolet Truck, Dodge Truck, GMC Truck, Jeep, Studebaker
L-157-A		IL/66/67/3	19036/037 00	4515-C	419.00	12-C/12-C	177.80	18.10-9.60/18.20-14.30	12/12	10-10	04+04	Optional	Dana, Fiat, FNM, FNV, Guerra, International
L-157-E				4515-E	419.00	16-B/16-B	177.80	18.10-9.60/18.20-14.30	16/16	10-10	04+04	Optional	Autocar, Brockway, Chevrolet Truck, Dodge Truck, GMC Truck, International, Mack Truck, Rockwell Axle
L-157-F				4515-A	419.00	06-A/06-A	177.80	18.10-9.60/18.20-14.30	06/06	3/8"	04+04	Optional	Fontaine, Rockwell Axle, Rogers, Standard Forge
L-157-G				4515-B	419.00	04-A/04-A	177.80	18.10-9.60/18.20-14.30	04/04	3/8"	04+04	Optional	Dana, Standard Forge
L-157-H				4515-F	419.00	12-C/12-C	177.80	18.10-9.60/18.20-14.30	12/12	1/4"	04+04	No	Rockwell Axle, Standard Forge
L-157-N				4515-H	419.00	16-B/16-B	177.80	18.10-9.60/18.20-14.30	16/16	10-10	04+04	Optional	Mack Truck, Rockwell Axle
L-157-O				4515-G	419.00	14-E/14-E	177.80	18.10-9.60/18.20-14.30	14/14	10-10	04+04	Optional	Autocar, Chevrolet Truck, Ford Truck, GMC Truck, International, Mack Truck, Rockwell Axle, Standard Forge

LonaFlex.	FRAS-LE	BFMC	WVA	FMSI					#	T		WI - ID	
L-157		IL/66/67/1		4515	419.00	12-C/12-C	177.80	18.10-9.60/18.20-14.30	12/12	08-10	04+04	Optional	Black Diamond, Brockway, Chevrolet Truck, Eaton Brakes, GMC Truck, Mercedes-Benz, Rockwell Axle
L-184	**DK/44**				230.00	10-A	50.00	5.00	10		04	No	
L-187				2053-T	280.00	10-A/10-A	57.20	4.80/6.00-5.20	10/10	04-04	02+02	No	Dodge Truck, Ford
L-189				2026-T	308.00	10-A/10-A	50.80	6.40/7.50-6.70	10/10	04-05	02+02	No	Ford, Ford Truck, GMC Truck
L-202				2060	356.00	12-A/12-A	63.50	6.40	12/12	07-06	02+02	No	Chrysler, Divco, Dodge Truck, Ford, Ford Truck
L-214	**RN/210**				254.00	12-A/12-A	44.50	4.80/7.20-4.80	12/12	ESPECIAL	02+02	No	Renault
L-215	**LD/123-S/F**				250.00	01-SF	50.00	5.00			04	No	Lada
L-216	**LD/124-S/F**				200.00	01-SF	40.00	5.00			04	No	Lada
L-219	**FD/77**				325.00	06-A/06-A	99.00	13.90-6.50/14.10-11.40	06/06	10-08	04+04	Yes/Si	Agrale, Ford, Marcopolo, Volkswagen
L-220	**FD/84**				381.00	14-E	177.80	18.30/11.60	14	10-10	08	Yes/Si	Ford, GM, Volkswagen
L-221	**FD/85**				381.00	08-A	152.40	18.30/11.60	08	10-10	08	Yes/Si	Ford, GM
L-222	**FD/86**			4702	381.00	08-A/08-A	101.60	18.70-9.60/18.80-14.70	08/08	10-10	04+04	Yes/Si	Ford, GM, Iveco, Volkswagen
L-223	**FD/87 VV/308**			4704	381.00	12-A/12-A	152.40	18.70-9.60/18.80-14.70	12/12	10-10	04+04	Yes/Si	Ford, Iveco, Volkswagen
L-224	**FD/88 VV/306**			4705	381.00	14-E/14-E	177.80	18.70-9.60/18.80-14.70	14/14	10-10	04+04	Yes/Si	Ford, Guerra, Iveco, Randon, Volkswagen
L-226	**FI/119**				394.00	12-A/12-A	152.40	20.20-14.30/20.20-17.60	12/12	10-10	04+04	No	Volkswagen
L-227	**MB/188**	MP/36/1	19488 00	4672	410.00	08-B	220.00	17.30/12.10	08	08x20	08	Yes/Si	Mercedes-Benz
L-228	**CB/49**				200.00	10-K	27.50	4.70	10		04	No	GM
L-245	**CB/41**				200.00	10-A	45.00	4.80	10	04-04	04	No	Chrysler, Ford, GM
L-307	**SV/228**	SV/39/2	17991 00		413.00	08-A	127.00	19.00	08	10-12	04	Yes/Si	Scania
L-308	**SV/229**	SV/40/2	19931 00		413.00	16-B	178.00	19.00	16	10-12	04	Yes/Si	Scania
L-309	**SV/230**	SV/41/2	19932 00		413.00	16-B	203.00	19.00	16	10-12	04	Yes/Si	Scania
L-310	**SV/231**	SV/42/2	19933 00		413.00	16-B	254.00	19.00	16	10-12	04	Yes/Si	Scania
L-311	**SV/224**	SV/26/1	17161 00		413.00	08-A	127.00	19.00	08	10-12	08	Yes/Si	Scania
L-321				8049	230.00	08-A/10-A	35.00	4.80	08/10	04-04	02+02	No	Ford, Huber-Warco, Renault
L-348	**MB/176**	MB/56/2	17259 00	1317	408.00	08-A	120.00	10.00	08	13-10	08	No	Mercedes-Benz
L-350	**ST/350**	SY/23/31/1	19245/782 00		420.00	06-A/08-A	160.00	15.00	06/08		04+04	Yes/Si	Cnhtc
L-351	**ST/351**	SY/24/1	19246 00		420.00	08-A	185.00	15.00	08		08	Yes/Si	DAF, Styer
L-352	**ST/352**				419.00	14-E/14-E	219.10	21.00/10.29 21.11/16.56	14 14	10x18	04+04	Yes/Si	Cnhtc
L-358-B				4311-B	419.00	06-A	177.80	18.60	06	3/8"	08	Optional	Mack Truck
L-358-C				4311-C	419.00	16-C	177.80	18.60	16	10-08	08	Optional	Brockway Truck, Eaton Brakes, Standard Forge
L-358-G			19899 00	4311-G	419.00	10-A	177.80	18.60	10	10-08	08	Optional	FDW Truck, Standard Forge
L-358-J		AX/14/6	19896 00	4311-J	419.00	14-C	177.80	18.60	14	10-08	08	Optional	Autocar, Brockway, Chevrolet Truck, Dodge Truck, Eaton Brakes, Ford Truck, GMC Truck, International
L-358				4311	419.00	04-A	177.80	18.60	04	3/8"	08	Optional	Mack Truck
L-361	**CB/36**				381.00	14-A	114.30	9.50	14	07-08	04	No	GM
L-378				4195-B	419.00	10-A	139.70	18.60	10	10-14	08	No	Brockway Truck, Eaton Brakes, Guerra, Randon
L-387				2006-T	280.00	10-A/14-A	50.80	4.80/6.00-5.20	10/14	04-05	02+02	No	Agrale, Dodge, Dodge Truck, Ford, GM, Plymouth
L-400	**F/755**				320.00	14-A	100.00	11.00	14		04	Yes/Si	Hino Commercial
L-401	**F/756**				320.00	14-A	115.00	11.00	14		04	Yes/Si	Hino Commercial
L-402	**F/763**			1482	325.00	12-A	100.00	11.20	12		04	Yes/Si	Isuzu
L-403	**F/764**		17413 00	1534	325.00	16-I	120.00	11.00	16		04	Yes/Si	Isuzu
L-404	**F/766**			1467	325.00	12-A	74.50	9.50	12		04	No	Mitsubishi
L-410	**MP/410**				410.00	14-E/14-E	180.00	21.00-10.90/21.10-16.90	14/14		04+04	Yes/Si	MAN
L-411	**MP/411**				410.00	14-E/14-E	220.00	21.00-10.90/21.10-16.90	14/14		04+04	Yes/Si	MAN
L-476	**VW/271**	VN/13/1	11259 00	8081	250.00	10-A	44.80	5.00	10	11-05	04	No	Volkswagen
L-477	**VW/270**	VN/12/1	13193 00	8080	250.00	10-A	54.80	5.00	10	11-05	04	No	Volkswagen
L-478	**VW/275**			1352	250.00	08-A/10-A	54.80	6.00	08/10	11-05	02+02	No	Volkswagen
L-488	**FD/76**				406.00	14-A	76.20	8.70	14	07-08	04	No	Ford
L-489	**CB/38**				222.00	10-A/10-A	44.50	5.20	10/10	04-04	02+02	No	GM
L-490	**CB/39**				222.00	10-A/10-A	57.20	5.20	10/10	04-04	02+02	No	Ford, GM
L-497	**SV/226**	SV/27/1	19393 00		413.00	12-B	203.00	19.00	12	10-12	08	Yes/Si	Guerra, Randon, Scania

LonaFlex.	FRAS-LE	BFMC	WVA	FMSI					#	T		WI - ID	
L-499	**SV/227**	SV/34/1	19647 00		413.00	12-B	254.00	19.00	12	10-12	08	Yes/Si	Scania
L-500				2080-T	280.00	08-A/12-A	63.50	5.20/6.00-5.20	08/12	04-05	02+02	No	Agrale, Ford, GM, Lincoln, Mercury
L-501	**MB/180**	MB/65/1	17105 00	1305	418.00	08-A	140.00	14.80	08	13-10	08	Optional	Mercedes-Benz
L-502				4524-B	419.00	08-A/08-A	127.00	18.10-9.60/18.20-14.30	08/08	10-10	04+04	Optional	Autocar, Chevrolet Truck, Dodge Truck, Fiat, GMC Truck, International, Mercedes-Benz, Rockwell Axle
L-503-A				4524-A	419.00	08-A/08-A	127.00	18.10-9.60/18.20-14.30	08/08	1/4" B	04+04	Optional	Rockwell Axle
L-503-C				4524-C	419.00	06-A/06-A	127.00	18.10-9.60/18.20-14.30	06/06	3/8"	04+04	Optional	Chevrolet Truck, Eagle, GMC Truck, Rockwell Axle
L-503				4524	419.00	08-A/08-A	127.00	18.10-9.60/18.20-14.30	08/08	08-10	04+04	Optional	Chevrolet Truck, Diamond Reo, Dodge Truck, Eaton Brakes, Flxible, GMC Truck, K-B Axle, Rockwell Axle
L-504-A				4536-A	311.00	06-A/06-A	139.70	17.90-11.90/17.90-13.20	06/06	08-08	04+04	Yes/Si	Eaton Brakes
L-504-B				4536-B	311.00	09-A/09-A	139.70	17.90-9.20/18.00-15.40	09/09	20-08	04+04	Optional	Dana, Fontaine, Standard Forge, Timpte
L-504				4536	311.00	06-A/06-A	139.70	17.90-9.20/18.00-15.40	06/06	08-09	04+04	Optional	Rockwell Axle, Standard Forge
L-505				4544	311.00	04-A	139.70	18.60	04	3/8"	08	Optional	Black Diamond, Dana, Dorsey, Fontaine, Loadcraft, Lufkin, Phelan, Schertzer, Standard Forge, Timpte
L-508	**VW/272**	VN/11/1	11293 00		248.00	10-A	45.00	4.00	10	11-05	04	No	Volkswagen
L-509	**MB/181**	MB/66/1	19182 00	1304	418.00	08-B	160.00	14.80	08	13-10	08	Optional	Mercedes-Benz
L-510				659-B	406.00	14-A	57.20	8.00	14	07-06	04	No	Brockway Truck, Diamond Reo, Dodge Truck, Dresser, GM, International, Volkswagen
L-511	**MB/194**				364.00	08-B	160.00	20.80/15.50	08	06x16	08	Yes/Si	Mercedes-Benz
L-512	**MB/195**				364.00	08-B	180.00	20.80/15.50	08	06x16	08	Yes/Si	Mercedes-Benz
L-518				2006	280.00	10-A/14-A	50.80	4.80	10/14	04-04	02+02	No	Chevrolet, Chevrolet Truck, Chrysler, Dodge, Dodge Truck, GM, GMC Truck, Oldsmobile, Plymouth, Pontiac
L-522-E	**MB/187**	MB/94/95/1	15580/581 16		304.00	12-A/14-A	98.00	11.80	12/14	06x16	02+02	Optional	Mercedes-Benz
L-522	**MB/186**	MB/72/73/1	15580/581 96	1320	300.00	12-A/14-A	98.00	9.80	12/14	06x16	02+02	Optional	Mercedes-Benz
L-523	**FD/74**				356.00	10-A/12-A	76.20	6.40	10/12	07-06	02+02	No	Ford, GM
L-524	**FD/75**				381.00	14-A	127.00	12.70	14	07-08	04	No	Ford, GM
L-525				855	229.00	10-A	43.00	4.40	10	04-04	04	No	Austin, Ford (UK), GM
L-526	**CB/43**				203.00	10-A/14-A	45.00	4.80	10/14	04-04	02+02	No	GM
L-528	**FD/68**				280.00	08-A/10-A	50.80	5.20/6.00-5.20	08/10	04-05	02+02	No	Ford
L-529				2026-AT	308.00	08-A/10-A	50.80	6.40/8.00-7.20	08/10	04-05	02+02	No	Chrysler, Ford, Puma
L-533				2042-A	330.00	10-A/14-A	63.50	6.40	10/14	07-06	02+02	No	Agrale, Chrysler, Ford
L-534	**FD/73**				330.00	10-A/12-A	76.20	6.40	10/12	07-06	02+02	No	Chrysler, Ford
L-535	**FD/71**				330.00	10-A/12-A	76.20	6.40/7.60-7.20	10/12	07-06	02+02	No	Agrle, Ford
L-538	**CB/42**				229.00	08-A/10-A	45.00	4.80	08/10	04-04	02+02	No	GM
L-540	**VW/256**				381.00	12-C	101.60	12.50	12	07-06	08	No	GM, Volkswagen
L-541	**VW/257**				381.00	12-C	127.00	12.50	12	07-06	08	No	GM, Volkswagen
L-544				2131	305.00	10-A/10-A	63.50	6.40	10/10	04-	02+02	No	Ford Truck
L-545				2137	305.00	10-A/10-A	76.20	6.40	10/10	04-	02+02	No	Ford Truck
L-547				2121-T	280.00	08-A/10-A	57.20	5.20/6.00-5.20	08/10	04-05	02+02	No	Ford, Lincoln, Mercury
L-548	**VW/273**	VN/15/1	10186 00		180.00	08-A	29.80	5.00	08	11-5	04	No	Volkswagen
L-549				2012-BT	254.00	10-A/10-A	44.50	4.80/6.00-5.20	10/10	04-04	02+02	No	Ford, Ford Truck, Mercury
L-550	**FI/90**				185.00	08-A	30.00	5.00	08		04	No	Fiat
L-551	**MB/185**	MP/32/1	19487 00		410.00	08-B	180.00	17.30/12.10	08	08x20	08	Yes/Si	Mercedes-Benz
L-552	**MB/184**	MP/31/1	19486 00	4671	410.00	08-B	160.00	17.30/12.10	08	08x20	08	Yes/Si	Mercedes-Benz
L-555	**FI/91-S/F**				228.00	01-SF	40.00	4.50			04	No	Fiat
L-556	**FD/63-S/F**				203.00	01-SF	36.30	6.10/3.20			02+02	No	Ford, Volkswagen
L-557	**CB/52**				305.00	10-A/10-A	63.00	4.80/6.00	10/10	04-05	02+02	No	GM
L-558-S/F	**FI/96-S/F**				180.00	01-SF	30.00	4.50			04	No	Fiat
L-559	**FD/59**				325.00	08-B/08-N	120.00	15.90-8.00/16.00-12.80	08/08	10-08	04+04	Yes/Si	Agrale, Volkswagen
L-560-B				4596-B	381.00	12-A	152.40	12.70	12		04	No	
L-560				4596	381.00	14-A	152.40	12.70	14	08-09	04	Optional	Chevrolet Truck, Dodge Truck, Ford Truck, GMC Truck, Int'l Harvester
L-561	**CB/51**				280.00	08-A/10-A	63.50	4.50/5.80-5.00	08/10	04-05	02+02	No	GM

LonaFlex.	FRAS-LE	BFMC	WVA	FMSI					#			WI - ID	
L-562	**FD/58**				325.00	08-A/08-A	100.00	15.90-8.00/16.00-12.80	08/08	10-08	04+04	Yes/Si	Agrale, Volkswagen
L-563				4597	381.00	14-A	177.80	12.70	14	08-09	04	No	Chevrolet Truck, Dodge Truck, Ford Truck, GMC Truck, Int'l Harvester
L-568				4591	311.00	12-B/12-B	190.50	17.90-13.20/17.90-11.90	12/12	08-08	04+04	Optional	Dana, Eaton Brakes, Great Dane, Highway Mfg., Hyster, Phelan, Rogers, Schertzer, Standard Forge, Strick
L-569	**MB/255**	MB/64/1	15057 00		300.00	10-A	90.00	10.60	10	08x15	04	Optional	Mercedes-Benz
L-577	**FD/72**				330.00	10-A/12-A	88.90	6.40/6.80-6.40	10/12	07-06	02+02	No	Agrale, Chrysler, Ford, GM, Marcopolo
L-578	**TY/252**				305.00	12-A	57.10	6.40	12	07-05	04	No	Toyota
L-586	**MB/193**	MB/117/118/2	17351/975 04		300.00	12-A/14-H	122.00	9.70	12/14	06x12	02+02	Yes/Si	Mercedes-Benz
L-587				4375	438.00	10-A	101.60	12.70	10	08-08	04	No	Eaton Brakes, Terex, Wabco
L-588				4354-A	508.00	06-A	152.40	18.80	06	3/8"	08	No	Terex
L-589				4622	508.00	12-D	190.50	18.80	12	3/8"	08	No	Rockwell Axle, Terex
L-620	**FD/66**				180.00	08-A	40.00	4.80	08	04-05	04	No	Ford
L-623	**FI/93**				330.00	12-A/14-A	101.60	9.50	08/14	10-	02+02	No	Fiat
L-625	**FD/65**				180.00	08-A	40.00	4.50	08	04-05	04	No	Ford
L-627	**FI/117**				394.00	08-A/08-A	152.40	12.70	08/08	10-	04+04	No	Fiat, Volkswagen
L-628		FI/124/1	19918 00		360.00	18-E	170.00	14.00	18	08x16	04	No	Dennis, Iveco
L-630				2095	255.30	12-A	50.80	4.80	12	04-05	02	No	Divco, Ford, Ford Truck
L-633	**MB/179**				418.00	08-A	130.00	14.80	08	13-10	08	No	Mercedes-Benz
L-635	**CA/36**				419.00	16-B/16-B	254.00	21.00-10.20/21.10-16.50	16/16	10-10	04+04	Yes/Si	Randon
L-636	**CA/33**				419.00	16-B/16-B	203.20	21.00-10.30/21.10-16.60	16/16	10-10	04+04	Yes/Si	Guerra, Randon
L-637	**FD/81**				381.00	14-E	219.60	18.30/11.60	14	10-10	08	No	Guerra
L-638	**CA/32**				419.00	16-B/16-B	203.20	18.10-9.60/18.20-14.30	16/16	10-10	04+04	Optional	Guerra, Iveco, Randon
L-639				4718	419.00	14-E/14-E	203.20	21.00-10.30/21.10-16.60	14/14	10-10	04+04	Optional	Randon, Rockwell
L-640	**VV/307**			4710	381.00	16-B/16-B	219.10	18.80-14.70/18.70-9.60	16/16	10-10	04+04	Yes/Si	Volvo
L-641				4707	419.00	14-E/14-E	177.80	21.00-10.30/21.10-16.60	14/14	10-10	04+04	Optional	GM, International, Randon, Rockwell
L-642				4720	419.00	08-A/08-A	127.00	21.00-10.30/21.10-16.60	08/08	10-10	04+04	Optional	Rockwell
L-643				4711	419.00	14-E/14-E	219.10	21.00-10.30/21.10-16.60	14/14	10-09	04+04	Optional	Rockwell
L-645	**VW/274**			1354	180.00	08-A	29.80	5.00	08	11-05	04	No	Volkswagen
L-646	**VW/276**			1402	200.00	10-A	38.60	5.20	10	11-05	04	No	Ford, Volkswagen
L-651	**MB/183**	MP/30/1	17683 00	4695	410.00	08-A	140.00	17.30/12.10	08	08x20	08	Yes/Si	Mercedes-Benz
L-652-B	**MB/177**	MP/29/1	17682 00	4694	410.00	08-A	120.00	17.30/12.10	08	13-10	08	Yes/Si	Mercedes-Benz
L-652	**MB/182**			4697	410.00	08-A	120.00	17.30/12.10	08	13-10	08	Yes/Si	Mercedes-Benz
L-653	**CB/47**				203.00	14-A	45.00	4.80	14	04-04	04	No	GM
L-654	**CB/48**				229.00	10-A	45.00	4.80	10	04-04	04	No	GM
L-655	**FD/82**				381.00	14-A	101.60	12.70	14	07-07	04	No	GM
L-658	**FD/78**				305.00	12-A/14-A	76.20	4.80/6.40	12/14	04-05	02+02	No	Ford
L-661	**FD/80**				394.00	06-A/06-A	127.00	12.70	06/06	10-	04+04	No	Ford, Volkswagen
L-662-C				1245-C	381.00	14-G	76.20	8.00	14	07-06	04	No	Chevrolet Truck, Dodge Truck, Ford Truck, GMC Truck, Int'l Harvester
L-662				1245-A	381.00	14-A	76.20	8.00	14	07-06	04	No	Chevrolet Truck, Diamond Reo, Dodge Truck, Ford Truck, GMC Truck, Int'l Harvester
L-663	**VV/288**				394.00	08-C/10-D	152.40	19.00-11.70/19.00-14.80	10/08		04+04	Yes/Si	Volvo
L-664	**VV/289**	VL/76/77/1	19562/563 00	4664	394.00	09-A/12-E	203.20	19.00-11.70/19.00-14.80	12/09		04+04	Yes/Si	Volvo
L-665	**VV/290**	VL/81/82/1	19799/800 00	4698	394.00	09-A/12-E	254.00	19.00-11.70/19.00-14.80	12/09		04+04	Yes/Si	Volvo
L-671	**FI/92**				325.00	12-A/14-A	100.00	8.00	12/14	10-	02+02	No	Fiat
L-696-B		FU/4/5/6		4551-B	419.00	16-B/16-B	219.10	18.10-9.60/18.20-14.30	16/16	10-08	04+04	Optional	Great Dane, Rockwell Axle, Timpte, Trailmobile
L-696-C				4551-C	419.00	06-A/06-A	219.10	18.10-9.60/18.20-14.30	06/06	3/8"	04+04	Optional	Eagle
L-696-E				4551-E	419.00	14-E/14-E	219.10	18.10-9.60/18.20-14.30	14/14	10-08	04+04	Optional	Dana, K-B Axle, Rockwell Axle, Timpte
L-696-Z		FU/4/5/3	19369/370 00	4551-Z	419.00	12-C/12-C	219.10	18.20-14.30/18.10-9.60	12/12	10-10	04+04	Optional	Fruehauf, Lecinena, Meritor, ROR, Trailor, SAF/Sauer, Van Hool, York
L-696		FU/4/5/1		4551	419.00	12-C/12-C	219.10	18.10-9.60/18.20-14.30	12/12	08-10	04+04	Optional	Black Diamond, Dana, Eaton Brakes, Fruehauf, Hobbs, K-B Axle, Lufkin, Rockwell Axle, Standard Forge

LonaFlex.	FRAS-LE	BFMC	WVA	FMSI					#	T		WI - ID	
L-698				4468	419.00	04-A	177.80	18.50	04	3/8"	08	Optional	Black Diamond, Dana, Dorsey, General Trailer, K-B Axle, Loadcraft, Lufkin, Miller, Nabors, Phelan, Rogers
L-700	**TY/253**				160.00	08-A	35.00	4.00	08		02	No	Toyota
L-701	**TY/254**				305.00	12-A	75.00	6.40	12	07-05	04	No	Toyota
L-705	**VV/248**	VL/70/71/1	17664/665 00	4696	413.00	08-A/10-A	127.00	19.00-11.70/19.00-14.80	10/08		04+04	Optional	Volvo
L-706	**VV/250**	VL/72/73/1	19467/468 00	4663	394.00	09-A/12-E	177.80	19.00-11.70/19.00-14.80	12/09		04+04	Optional	Volvo
L-709	**VV/296**	VL/85/1	17992 00		410.00	08-A	125.00	18.30/12.60	08		08	Yes/Si	Volvo
L-710	**VV/298**	VL/87/1	19938 00		410.00	12-E	175.00	18.30/12.60	12	10-10	08	Yes/Si	Volvo
L-711	**VV/299**	VL/88/1	19939 00		410.00	12-E	200.00	18.30/12.60	12	10-10	08	Yes/Si	Volvo
L-712	**VV/300**	VL/89/1	19940 00		410.00	12-E	225.00	18.30/12.60	12	10-10	08	Yes/Si	Volvo
L-713	**VV/297**	VL/86/1	19941 00		410.00	12-E	150.00	18.30/12.60	12		08	Optional	Volvo
L-721-T				287-T	280.00	10-A/10-A	50.80	4.80/6.00-5.20	10	04-04	02+02	No	Dodge Truck, Ford Truck, Int'l Harvester
L-721				287	280.00	10-A	50.80	4.80	10	04-04	04	No	Agrale, Ford, Int'l Harvester
L-722				1252	381.00	14-A	127.00	12.70	14	08-07	04	No	Chevrolet Truck, Diamond Reo, Dodge Truck, Ford Truck, Int'l Harvester
L-724				1254	406.00	01-SF	127.00	12.70			04	No	Int'l Harvester
L-726	**FD/64-S/F**				180.00	01-SF	30.00	5.00/3.00			02+02	No	Ford, Volkswagen
L-727				4505-A	381.00	12-C	177.80	18.40/13.20	12	10-08	08	Yes/Si	Ford, Ford Truck
L-728	**FD/83**			4693	381.00	08-A	101.60	18.30/11.60	08	10-10	08	Yes/Si	Ford, GM, Volkswagen
L-733	**VV/303**	VL/87/2	19090 00		410.00	14-I	173.20	17.90/12.20	14		08	Yes/Si	Volvo
L-734	**VV/304**	VL/88/2	19071 00		410.00	14-I	198.20	17.90/12.20	14		08	Yes/Si	Volvo
L-735	**VV/305**	VL/89/2	19068 00		410.00	14-I	223.20	17.90/12.20	14		08	Optional	Volvo
L-736	**IV/158**	PB/23/26/1	17096/099 00		310.00	12-A/14-H	100.00	12.60	12/14		02+02	No	Iveco
L-737		MB/60/1	17276 00		430.00	08-A	140.00	15.00	08	08x20	08	Optional	Mercedes-Benz
L-738		BC/37/1	19094 00		420.00	10-A	200.00	17.80/11.00	10	13-12	08	Optional	Achsen, Acerbi, Battaglino, BPW, DAF, Fruehauf, Lecinena, Piacenza, SAF, Steyr, Zorzi
L-739		TY/18			320.00	01-SF	65.00	8.00			04	No	Toyota
L-740		TY/19			320.00	01-SF	85.00	8.00			04	No	Toyota
L-741-A				4625-A	419.00	16-B/16-B	177.80	18.10-8.40/18.20-13.10	16/16	10-10	04+04	Optional	Chevrolet Truck, Ford Truck, GMC Truck, Rockwell Axle
L-741-B			19897/898 00	4625-B	419.00	16-B/16-B	177.80	18.10-8.40/18.20-13.10	16/16		04+04	Yes/Si	Ford
L-742		RN/101/1	19935 00		414.00	08-A	175.00	18.50	08	08x18	08	Yes/Si	Heuliez, Renault
L-743	**F/724**	NN/63/1			412.00	12-G	216.00	15.50	12	10-10	08	Yes/Si	Denning, Hino Bus
L-744	**F/725**				410.00	12-G	140.00	14.00	08	10-10	08	Yes/Si	Isuzu
L-745	**F/726**				311.20	01-SF	125.00	9.50			04	Yes/Si	Trailer Axles
L-746	**F/727**				311.10	01-SF	190.00	12.70			04	No	Allison Trailers
L-747	**F/746**				180.00	08-A	40.00	5.00	08		04	No	Renault
L-748	**F/757**				298.40	10-B/10-B	200.00	19.50-15.00/19.30-8.00	12/12		04+04	No	Fruehauf
L-749	**F/765**				325.00	12-A	109.50	9.50	12		04	Optional	Mitsubishi
L-750	**F/767**			1478	320.00	12-A	90.00	10.00	12		04	No	Mitsubishi
L-751	**F/768**	LH/103/104/1	17945/946		304.00	14-A/16-A	101.60	6.00/7.50	14/16		02+02	No	Nissan
L-752	**F/772**				358.00	01-SF	210.00	18.40-10.00/18.40-15.60			04+04	Yes/Si	York
L-754	**F/786**				410.00	17-C	220.00	16.00	17		08	Yes/Si	Isuzu
L-756	**F/788**	CB/31/1 R			410.00	15-B	220.00	16.00	15		08	Yes/Si	Nissan / U.D.
L-757	**F/803**		19139 00		402.00	10-N	150.00	16.00	10		08	Yes/Si	Nissan / U.D. , Golden Dragon
L-758	**F/804**		19138 00	4747	412.00	15-B	220.00	16.00	15		08	Yes/Si	Nissan / U.D. , Golden Dragon
L-759	**F/833**				410.00	10-A	155.00	15.00	10		08	Yes/Si	Daewoo, Hyundai
L-760	**F/834**				410.00	16-K	203.20	15.00	16		08	Yes/Si	Daewoo
L-761	**F/835**				410.00	16-J	220.00	16.00	16		08	Yes/Si	Mitsubishi, Hyundai
L-762	**FD/61-S/F**				180.00	01-SF	30.00	6.00/3.00			02+02	No	Ford, GM
L-763	**FI/97-S/F**				184.80	01-SF	27.40	4.10			04	No	Fiat
L-764	**FD/98-S/F**				202.20	01-SF	35.90	4,500			04	No	Ford
L-766				1307	381.00	14-A	88.90	10.70	14	10-08	04	No	Chevrolet Truck, GMC Truck, Dodge Truck, Ford Truck, International, Rockwell Axle
L-767		IZ/28/1		1418	410.00	10-N	140.00	15.80	10		08	Optional	Chev/GMC Truck, Isuzu Truck
L-768		NN/61/1	19683 00	4736	406.00	12-G	203.20	15.50	12		08	Optional	Hino

LonaFlex.	FRAS-LE	BFMC	WVA	FMSI					#	T		WI - ID	
L-769		NN/12/1	15543 00		320.00	12-A	75.00	8.00	12		04	No	Chev/GMC Truck, Isuzu Truck
L-770		FH/100 R		1434	320.00	06-A	130.00	11.50	06		08	Yes/Si	International Truck, Mitsubishi Fuso, UD-Nissan
L-771		MP/36/2	19496 00		410.00	08-D	220.00	17.30/12.10	08	08x20	08	Yes/Si	MAN, Mercedes-Benz, Steyr
L-772		FH/100 F		1410	320.00	06-A	110.00	11.50	06	10-	08	Yes/Si	International Truck, Mitsubishi Fuso, UD-Nissan
L-773				1455	320.00	16-M	119.90	12.90	14		04	Yes/Si	Chevrolet Truck, GMC Truck, Isuzu
L-774				1458	320.00	14-A	109.70	11.50	14		04	Yes/Si	Chevrolet Truck, GMC Truck, Isuzu
L-775-C				4317-C	419.00	04-A	152.40	18.60	04	3/8"	08	Optional	Mack Truck
L-775-G				4317-G	419.00	10-A	152.40	18.60	10	10-08	08	Optional	Chevrolet Truck, Diamond Reo, Eaton Brakes, GMC Truck, White Truck
L-775				4317	419.00	04-A	152.40	18.60	04		08	No	
L-777	**F/781**			1471	400.00	10-O	102.00	15.00	10		08	Yes/Si	Hino Commercial
L-778	**F/782**			1331-A	400.00	10-P	130.00	15.00	10		08	Yes/Si	Hino Commercial
L-779	**F/783**			1422	400.00	10-O	120.00	15.00	08		08	Yes/Si	Hino Bus, International, Mitsubishi, U.D.
L-780	**F/784**			1419	400.00	12-B	154.00	15.00	12		08	Yes/Si	Hino Bus, International, Mitsubishi, U.D.
L-781	**F/787**	CB/31/1 F			410.00	14-B	148.50	14.80	14		08	Yes/Si	Nissan / U.D.
L-787	**F/836**			1418A	410.00	10-A	140.00	15.00	10		08	Yes/Si	Mitsubishi, Hyundai
L-788	**F/837**			4738	410.00	14-K	200.00	15.00	14		08	Yes/Si	Mitsubishi, Hyundai
L-789		NN/40/1			400.00	06-A	129.00	15.00	06		08	Optional	Datsun, Minsei
L-790		NN/41/1	19814 00		410.00	09-A	180.00	18.00	09		08	Optional	Datsun, Minsei
L-791		NN/52/1	19623 00	1335	406.00	12-G	178.00	12.70	12		08	No	Hino
L-792		NN/60/1	17341 00	4737	406.00	08-A	127.00	15.50	08		08	Yes/Si	Hino
L-793	**F/818**				410.00	17-C	220.00	18.75	17		08	Yes/Si	Daewoo
L-794	**F/819**				410.00	12-J	155.00	18.30	12		08	Yes/Si	Daewoo
L-795	**F/820**				440.00	13-C/13-C	220.00	17.50-11.20/18.50-17.50	13/13		04+04	Yes/Si	Hyundai
L-796	**F/822**				440.00	13-C/13-C	207.00	17.50-11.20/18.50-17.50	13/13		04+04	Yes/Si	Hyundai
L-797	**F/824**				440.00	10-N/10-S	156.00	17.50-11.20/18.50-17.50	10/10		04+04	Yes/Si	Hyundai
L-798	**F/923**				410.00	08-A	148.00	15.50	08		08	Yes/Si	
L-799	**F/924**				414.00	12-G	217.00	16.50	12		08	Yes/Si	Tianjin
L-800	**F/925**		17406 00	1490	400.00	06-A	130.00	15.00	06		08	No	Yutong
L-801	**F/926**		19086 00		400.00	06-A	155.00	15.00	06		08	Yes/Si	Yutong
L-802	**F/935**				412.00	12-G	152.00	15.50	12		08	Yes/Si	Hino
L-803	**F/936**				412.00	12-G	216.00	15.50	12		08	Yes/Si	Hino
L-804	**F/937**			4741	412.00	15-D	220.00	15.60	15		08	Yes/Si	Nissan / U.D.
L-805	**F/938**		19691 00		412.00	10-N	150.00	15.60	10		08	Yes/Si	Nissan / U.D.
L-806	**F/939**			4739	412.00	10-A	150.00	15.60	10		08	Yes/Si	Mitsubishi
L-807	**F/940**				410.00	12-G	150.00	15.00	12		08	Yes/Si	Hino
L-808	**F/941**				412.00	10-A	150.00	15.60	10		08	Yes/Si	Hino
L-809	**F/927**				410.00	12-G	152.00	15.00	12		08	Yes/Si	
L-810	**F/928**				416.00	15-D	219.00	15.80	15		08	Yes/Si	Nissan
L-811	**VV/287**	VL/74/75/1	19560/561 00	4662	413.00	10-D/12-F	152.40	19.00-11.70/19.00-14.80	12/10		04+04	Optional	Volvo
L-812				4709	419.00	14-F	177.80	21.60/12.70	14	10-10	08	Optional	Eaton Brakes
L-813				4692	311.00	10-B/10-B	190.50	18.00-15.40/17.90-9.20	10/10	10-08	04+04	Optional	Dana, Standard Forge
L-814				4725	419.00	10-A	152.40	22.00/13.10	10	10-	08	Optional	Eaton
L-815		BC/100/101/1	19902/903 00		360.00	08-A/10-A	199.50	17.50-11.50/17.50-9.30	08/10	08x15	04+04	Yes/Si	BPW, Gorica. Viberti
L-816		BC/36/1	1477-TT c/17.8		420.00	10-A	180.00	17.80/11.00	10	13-12	08	Yes/Si	Achsen, Acerbi, Battaglino, BPW, DAF, Fruehauf, Knott, Lecinena, Piacenza, SAF, Steyr, Zorzi
L-817		RN/104/1	19187 00		413.00	08-B	220.00	18.50	08	08x18	08	No	Heuliez, Karosa, Renault
L-818		RW/21/22/1	19908/909 00		350.00	10-B/10-B	200.00	18.30-10.40/18.40-14.60	10/10	10-10	04+04	Yes/Si	Meritor, Samro, Zorzi
L-819		RW/9/13/3	19604/605 00		311.00	10-B/10-B	190.50	15.70-12.50/15.50-8.30	10/10	10-10	04+04	Yes/Si	Acerbi, Crane Fruehauf, Dyson, Meritor, Moseley, Samro, Scammell, Van Hool
L-820				4223-A	419.00	10-A	127.00	18.60	10	10-10	08	Optional	Autocar, Eaton Brakes, Ford Truck, International, Oshkosh, White Truck

LonaFlex.	FRAS-LE	BFMC	WVA	FMSI					#			WI - ID	
L-821-B				4561-B	413.00	14-A	88.90	11.10	14	10-07	04	No	Ford Truck, Freightliner, Kenworth, Peterbilt, Rockwell Axle
L-821				4561	413.00	14-A	88.90	11.10	14	07-07	04	No	Diamond Reo, Ford Truck, Rockwell Axle
L-822				4607	311.00	04-A	190.50	18.60	04	3/8"	08	Optional	Black Diamond, Dana, Fruehauf, Great Dane, Hyster, Miller, Nabors, Phelan, Rogers, Standard Forge, Strick
L-823		BC/80/1	19574 00		300.00	08-A	200.00	17.50/10.60	08	08x18	08	Optional	Acerbi, Bai et Fond, Bertoja, BPW, Cardi, Kässbohrer, Lecitrailer, Piacenza, Rolfo, Trabosa, Zorzi
L-825		LE/60/1/2	19066/067 00		394.00	17-A/17-B	203.20	18.70	17/17	10-12	02+02	Optional	Albion, DAF, Leyland
L-826		LE/69/1	19662 00		394.00	12-A	152.40	18.80	12	10-12	04	Optional	DAF
L-827		SA/10/11/1	19049/199 95		414.00	22-A/26-A	150.00	12.50	26/22	06x15	02+02	No	Colaert, Crane Fruehauf, Heuliez, Lazenave, Maduraud, Renault, Titan
L-828		SJ/22/23/1	19515/516 00		300.00	08-A/08-A	200.00	15.60-7.60/15.70-12.00	08/08	08x18	04+04	Yes/Si	Kaiser, Kässbohrer, King, Lag, SAE (Dupillier), SAF/Sauer
L-829				1443-TT	381.00	14-A	100.40	7.80/14.20/7.80	14	10-7	04	No	Eaton Brakes
L-831		SJ/30/31/1	19477/478 00		420.00	08-A/08-A	203.20	20.30-17.00/20.20-11.60	08/08	08x15	04+04	Yes/Si	Kaiser, SAE (Dupillier), SAF/Sauer
L-832		MB/100/101/1	17973/974 00		300.00	12-A/14-A	102.50	9.30	12/14	06x10	02+02	Yes/Si	Mercedes-Benz
L-833-B				4462	514.00	14-B/14-B	177.80	18.10-8.80/18.10-12.30	14/14	08-10	04+04	No	Easton, Rockwell Axle
L-833		MB/111/112/1	17949/950 20		364.00	06-A/08-A	130.00	15.50-10.00/15.50-13.30	08/06	08x15	04+04	Yes/Si	Mercedes-Benz
L-834		MB/120/121/1	19078/112 20		364.00	06-E/08-B	200.00	15.50-10.00/15.50-13.30	08/06	08x12	04+04	Yes/Si	Mercedes-Benz
L-835		MB/113/114/1	19844/845 20		364.00	06-E/08-B	160.00	15.50-13.30/15.50-10.00	06/08	08x15	04+04	Yes/Si	Mercedes-Benz
L-836	**DF/235**	DF/44/45/1	19010/011 00		420.00	08-A/08-A	150.00	21.00-12.70/21.10-17.60	08/08	10-10	04+04	Yes/Si	DAF
L-837		DF/46/47/1	19052/055 00		420.00	12-C/12-C	175.00	21.00-12.70/21.10-17.60	12/12	10-10	04+04	Yes/Si	DAF
L-838		DF/48/49/1	19063/064 00		420.00	16-B/16-B	200.00	21.00-12.70/21.10-17.60	16/16	10-10	04+04	Yes/Si	Bova, DAF
L-839		DF/50/51/1	19069/077 00		420.00	16-B/16-B	240.00	21.00-12.60/21.10-17.50	16/16	10-10	04+04	Yes/Si	DAF
L-840		MB/102/1	17929 00		304.00	10-A	135.00	11.50/7.20	10	08x15	04	Yes/Si	Mercedes-Benz
L-841		BC/35/1	19200 00		420.00	10-A	160.00	17.80-11.00	10	08x15	08	No	BPW, Cardi, Crane Fruehauf, SAE, SAF/Sauer, Warsteiner
L-842				4670	311.00	10-B/10-B	190.50	18.00-14.70/17.90-9.20	10/10	10-	04+04	Optional	Miller, Rockwell Axle
L-843		MP/31/2	19494 00		410.00	08-I	160.00	17.30/12.10	08	08x20	08	Yes/Si	MAN, Mercedes-Benz, Optare, Renault, Van Hool
L-844		MP/32/2	19495 00		410.00	08-D	180.00	17.30/12.10	08	08x20	08	Yes/Si	MAN, Mercedes-Benz, Renault, Steyr, Van Hool
L-845		CW/3/1	19502 00	4605	381.00	08-A	152.40	18.60/11.90	08	10-09	08	Optional	Autocar, Chevrolet Truck, Diamond Reo, Dodge Truck, Ford Truck, GMC Truck, International, Rockwell Axle
L-846				4715	419.00	12-A/12-A	152.40	21.00-10.30/21.10-16.60	12/12	10-09	04+04	Optional	Rockwell
L-848		GG/218/1	19177 00		360.00	12-C	160.00	16.30/11.50	12	10-08	08	Yes/Si	MAN, Optare
L-849		GG/217/1	17017 00		360.00	08-A	140.00	16.30/11.50	08	08x15	08	Yes/Si	MAN, Optare, Renault
L-850				4719	419.00	10-A	127.00	22.00/13.10	10	10-	08	Optional	Eaton
L-851		BT/59/6	19657 00		414.00	09-A	175.00	13.50	09	08x18	04	Optional	Heuliez, Renault
L-852		PB/13	19690 00		500.00	01-SF	180.00	17.80/12.60			08	No	Perrot
L-854		CW/2/1		4615	381.00	08-A	127.00	18.60/11.90	08	10-09	08	Optional	Autocar, Brockway Truck, Diamond Reo, Dodge Truck, Ford Truck, International, Rockwell Axle, White Truck
L-855		SJ/34/35/1	19490/491 00		367.00	08-A/08-A	200.00	20.80-16.00/20.70-10.70	08/08	08x15	04+04	Yes/Si	SAF/Sauer
L-856				4649	311.00	10-B/10-B	203.20	17.70-7.70/17.90-15.20	10/10	08-08	04+04	Optional	Fruehauf, Hobbs
L-857		CW/4/1	19384 00	4602	381.00	12-C	177.80	18.60/11.90	12	10-10	08	Optional	Autocar, Chevrolet Truck, Dodge Truck, Ford Truck, GMC Truck, International, Mack Truck, Rockwell Axle
L-858		SJ/28/29/1	19283/284 00		420.00	08-A/08-A	177.80	20.30-16.60/20.20-11.60	08/08	08x15	04+04	Yes/Si	Kaiser, SAE, SAF/Sauer
L-862-AT				2051-AT	254.00	10-A/10-A	57.20	4.80/6.00-5.20	10/10	04-04	02+02	No	Ford, Mercury
L-863				1193	381.00	01-SF	101.60	9.50			04	No	Int'l Harvester
L-864				1196	406.00	01-SF	127.00	9.50			04	No	Dodge Truck, Int'l Harvester
L-866				1199	406.00	01-SF	152.40	9.50			04	No	Dodge Truck, Ford Truck, Int'l Harvester, Mack Truck
L-867				1230	381.00	01-SF	127.00	9.50			04	No	Mack Truck
L-868				1255	406.00	01-SF	152.40	12.70			04	No	Chevrolet Truck, Ford Truck, GMC Truck, Int'l Harvester
L-869				1276	406.00	14-A	63.50	8.00	14	07-	04	No	Dodge Truck, Ford Truck

LonaFlex.	FRAS-LE	BFMC	WVA	FMSI					#	T		WI - ID	
L-870-B				1280-B	381.00	14-G	88.90	8.00	14	07-06	04	No	Chevrolet Truck, GMC Truck, Int'l Harvester
L-870				1280	381.00	14-A	88.90	8.00	14	07-06	04	No	Chevrolet Truck, Dodge Truck, Ford Truck, GMC Truck, Int'l Harvester
L-871				1290	381.00	01-SF	75.40	9.50			04	No	Chevrolet Truck, Dodge Truck, Ford Truck, GMC Truck
L-872				1294	356.00	14-A	63.50	8.00	14	07-	04	No	Int'l Harvester
L-874	**MB/140**	MB/68/1	17298 00	1310	418.00	08-A	120.00	15.00	08	08x15	08	Optional	Auwarter, Mercedes-Benz
L-875-T				2038-T	280.00	10-A/10-A	50.80	4.80/6.00-5.20	10/10	04-04	02+02	No	Dodge Truck
L-875				2038	280.00	10-A/10-A	50.80	4.80	10/10	04-04	02+02	No	Ford
L-877				2053	280.00	10-A/10-A	57.20	4.80	10/10	04-04	02+02	No	Ford, Int'l Harvester
L-878				2066	254.00	01-SF	63.50	4.80			02+02	No	American Motors
L-881				4350	508.00	06-A	203.20	18.60	06	3/8"	08	No	K-B Axle
L-882-B				4398-B	368.00	04-E	127.00	18.60	04	3/8"	08	No	Flxible, Flyer, GMC Coach, Motor Coach, Prevost
L-882				4398	368.00	04-A	127.00	18.60	04	3/8"	08	Optional	Flxible
L-883-B				4462-A	514.00	14-B/14-B	177.80	18.10-8.80/18.10-12.30	14/14	10-	04+04	No	Wabco
L-884				4470	514.00	12-A/12-A	127.00	18.40-9.10/18.50-12.70	12/12	10-10	04+04	No	Eaton Brakes, Rockwell Axle
L-885				4480	559.00	14-B/14-B	177.80	19.10-11.90/19.00-9.10	14/14	10-10	04+04	No	Caterpillar, Rockwell Axle
L-886				4525	457.00	01-SF	203.20	18.50			08	No	Eaton Brakes
L-887-C				4549-C	419.00	08-A/08-A	101.60	18.10-9.60/18.20-14.30	08/08	10-08	04+04	Optional	Chevrolet Truck, Crown Coach, GMC Truck, Mack Truck, Rockwell Axle, Timpte, Trailmobile
L-887				4549	419.00	08-A/08-A	101.60	18.10-9.60/18.20-14.30	08/08	08-10	04+04	Optional	Chevrolet Truck, Duplex Truck, Flxible, GMC Truck, Mack Truck, Rockwell Axle, Standard Forge, Trailco
L-888				4552	419.00	16-B/16-B	254.00	18.10-9.60/18.20-14.30	16/16	08-08	04+04	Optional	Eaton Brakes, Great Dane, Hobbs, K-B Axle, Rockwell Axle, Standard Forge, Timpte, Trailmobile
L-889				4562	381.00	12-A	88.90	9.50	12	08-07	04	No	Ford Truck
L-892				4595	381.00	08-A	177.80	18.60	08	10-08	08	Optional	Chevrolet Truck, GMC Truck
L-893				4601	514.00	08-A/08-A	101.50	18.40-10.90/18.50-14.70	08/08	10-	04+04	No	Autocar, Rockwell Axle
L-894		CW/1/1		4610	381.00	08-A	101.60	18.60/11.90	08	10-09	08	No	Chevrolet Truck, GMC Truck, Mack Truck, Rockwell Axle
L-895		CW/7/1		4618	660.00	24-D	203.20	18.60/12.60	24	10-	08	No	Rockwell Axle
L-897				4621	311.00	01-SF	190.50	18.40/14.00			08	Optional	Rockwell Axle, Trailmobile
L-899-A				4633-A	514.00	18-D	177.80	19.30/13.60	18	10-	08	No	Mack Truck, Rockwell Axle, Wabco
L-900				4639	381.00	14-A	127.00	12.70	14	07-07	04	No	Chevrolet Truck, GMC Truck
L-901				4654	419.00	08-A/08-A	127.00	18.10-9.00/18.20-13.20	08		04+04	Optional	Ford Truck, Mack Truck, Rockwell Axle
L-902				4665	381.00	06-A	152.40	18.00/12.30	06	3/8"	08	Yes/Si	GMC Coach
L-903				4666	381.00	08-K	254.00	18.00/12.30	08	3/8"	08	Yes/Si	GMC Coach
L-904				4674	419.00	16-C	219.10	18.60	16	10-08	08	Yes/Si	Eaton Brakes
L-905				4690	384.00	06-A/06-A	152.40	20.40-15.90/20.40-13.00	06/06	3/8"	04+04	Yes/Si	GMC Coach
L-906				4691	384.00	08-K/08-K	254.00	20.40-15.90/20.40-13.00	08/08	3/8"	04+04	Yes/Si	GMC Coach
L-907				4700	311.00	06-A/06-A	101.60	17.90-13.20/17.90-11.90	06/06	08-	04+04	Optional	Dexter
L-908				4701	419.00	12-C/12-C	177.80	21.70-11.10/21.80-16.60	12/12	10-	04+04	Optional	Dana
L-909				4703	381.00	08-A/08-A	127.00	18.70-9.60/18.80-14.70	08/08	10-10	04+04	Optional	Rockwell
L-910				4708	419.00	14-F/14-F	177.80	20.00-15.20/19.90-9.60	14/14	10-10	04+04	Optional	Eaton Brakes
L-911	**AC/10**			4716	381.00	10-A	152.40	22.20/14.00	10	10-09	08	Optional	Eaton
L-912				4717	381.00	14-F	219.10	22.20/14.00	14	10-10	08	No	Eaton
L-913				4726	419.00	16-B	219.10	21.60/12.70	16	10-10	08	Optional	Eaton
L-914				4728	419.00	16-B/16-B	219.10	21.00-10.30/21.10-16.60	16/16	1/4R	04+04	Yes/Si	Rockwell
L-915				4729	381.00	08-A	101.60	20.60/13.20	08	10-	08	Optional	Dana
L-916				8017	185.00	01-SF	30.00	4.00			04	No	Fiat, Yugo
L-917		FD/50/51/1	13057/058 00	8020	254.00	10-A/12-A	44.50	4.80	22	ESPECIAL	02+02	No	Peugeot, Simca
L-918				8027	230.00	12-A	50.00	4.80	12		04	No	Opel
L-919				8124	229.00	08-A/10-A	40.00	5.00	08/10		02+02	No	Renault
L-920-TT		BC/36/1 C/16.80	19032 90	1477-TT	420.00	10-A	180.00	16.80/10.00	10		08	Yes/Si	Theurer Trailer
L-922-T				2146-T	305.00	01-SF	63.50	4.80/6.40-5.60			02+02	No	Dodge Truck, Ford Truck, Int'l Harvester

LonaFlex.	FRAS-LE	BFMC	WVA	FMSI					#	T		WI - ID	
L-923-T				2157-T	330.00	12-A/14-A	88.90	6.40/9.50-8.00	12/14	07-06	02+02	No	Chevrolet Truck, GMC Truck
L-924-E				4227-E	368.00	04-A	101.60	18.60	04	3/8"	08	Optional	Flxible, GMC Coach
L-925-F				4228-F	368.00	04-A	152.40	18.60	04	3/8"	08	Optional	Flxible, Rockwell Axle
L-926-A				4471-A	457.00	06-A/06-A	177.80	18.00-10.70/18.10-15.20	06/06	3/8"	04+04	No	Rockwell Axle
L-926-B				4471-B	457.00	16-B/16-B	177.80	18.00-10.70/18.10-15.20	16/16	10-10	04+04	No	Autocar, Brockway Truck, Ford Truck, GMC Truck, International, Kenworth, Mack Truck, Rockwell Axle
L-927-A				4504-A	381.00	08-A	152.40	18.40/13.20	08	10-08	08	Optional	Ford Truck
L-928-B				4527-B	457.00	06-A	177.80	18.40	06	3/8"	08	Optional	Eaton Brakes, Mack Truck
L-929-A				4528-A	381.00	08-A	127.00	18.50/13.40	08	10-08	08	Optional	Ford Truck
L-930-B				4541-B	368.00	04-E	203.20	18.60	04	3/8"	08	No	Flxible, GMC Coach, Motor Coach, Prevost, Rockwell Axle
L-931-A				4592-A	368.00	06-C	254.00	18.60	06	3/8"	08	Optional	Flxible, Flyer, GMC Coach, Rockwell Axle
L-933-A		RW/1/2/5	19017/997 00	4644-A	419.00	16-B/16-B	203.20	18.20-14.30/18.10-9.60	16/16	10-10	04+04	Yes/Si	DAF, Foden, Seddon Atkinson
L-934-A				4661-A	311.00	06-A/06-A	127.00	17.90-11.90/17.90-13.20	06/06		04+04	Yes/Si	Dexter
L-936		BC/104/105/1	19952/953 00		360.00	08-A/10-A	160.00	17.50-9.30/17.50-11.50	10/08	08x15	04+04	Yes/Si	BPW, Viberti
L-937		BC/39	17115 00		400.00	01-SF	120.00	10.00			08	No	BPW, SAF/Sauer
L-938		BC/79/1	19573 00		300.00	08-A	150.00	17.50/10.60	08	08x18	08	Yes/Si	BPW
L-939		BC/81/1	19591/19825 00		420.00	10-A	220.00	17.80/11.00	10	08x15	08	Optional	BPW
L-940		BC/90/91/1	19166/167 00		400.00	10-A/10-A	200.00	19.20-14.10/19.00-6.90	10/10	08x20	04+04	Yes/Si	Kässbohrer
L-941		BC/92/93/1	19168/169 00		400.00	10-A/10-A	150.00	19.00-6.90/19.20-14.10	10/10	08x20	04+04	Yes/Si	Kässbohrer, Lohr
L-942		BC/97/1	19094 97		420.00	10-A	200.00	17.50/10.70	10	08x15	08	Optional	Acerbi, Battaglino, Benalu, BPW, Cardi, Crane Fruehauf, Kässbohrer, Renault
L-943		BC/98/1	19032 97		420.00	10-A	180.00	17.50/10.70	10	08x15	08	Optional	Acerbi, Battaglino, Benalu, BPW, Cardi, Crane Fruehauf, Kässbohrer, Renault
L-950		BO/55/56	17713/714 00		410.00	01-SF	127.00	12.30/6.70			02+02	No	AWD, Bedford
L-952		CW/11/1	19887 00		394.00	16-B	177.80	19.50/12.80	16		08	Yes/Si	Ford, Iveco
L-953		CW/12/1	19921 00		394.00	16-B	200.00	19.50/12.80	16		08	Yes/Si	AWD, Ford, Iveco, Leyland/ DAF
L-954		CW/4/2	19385 00		381.00	12-H	177.80	18.60-11.903	12		8	No	
L-956		DF/16/17/2	19256/260 00		419.00	14-D/14-D	178.00	18.50-9.30/18.60-14.00	14/14	10-10	04+04	Yes/Si	Auwarter, Bova, DAF
L-958		DF/20/21/3	19150/151 00		419.00	10-A/10-A	152.40	18.50-9.40/18.60-14.00	10/10	10-10	04+04	Optional	Bova, DAF, Lag, Optare, Sisu, Trailor
L-959		DF/32/33/1	19890/891 00		420.00	16-B/16-B	200.00	18.80-16.00/18.70-11.40	16/16	10-10	04+04	Yes/Si	Bova, DAF
L-960		DF/34/35/1	19900/901 00		420.00	08-A/08-A	150.00	18.70-11.40/18.80-16.00	08/08	10-10	04+04	Yes/Si	DAF, Optare
L-961		DF/36/37/1	19888/889 00		420.00	12-C/12-C	175.00	18.70-11.40/18.80-16.00	12/12	10-10	04+04	Yes/Si	DAF
L-962		DF/38/39/1	19914/915 00		420.00	16-B/16-B	240.00	18.70-11.40/18.80-16.00	16/16	10-10	04+04	Yes/Si	DAF, Optare
L-963	**F/949**				325.00	06-A	120.00	15.88 -8.00	06		04+04	optional	
L-966	**FD/89**			4706	381.00	16-B/16-B	203.20	18.70-9.60/18.80-14.70	16/16	10-10	04+04	Yes/Si	Rockwell
L-967		FI/100/101/1	15732/733 00		325.00	12-A/14-A	80.00	7.00	14/12	06x12	02+02	No	Iveco, Perrot
L-970	**FI/115**	FI/86/1	17481 00		420.00	16-A	125.00	12.00	16	13-	04	No	Fiat
L-971		FT/15/16/1	19790/791 00		419.00	12-C/12-C	177.80	18.30-14.50/18.30-9.80	12/12	05x16	04+04	Yes/Si	Crane Fruehauf
L-972		FT/6/7/1	19557/606 00		419.00	16-B/16-B	203.20	18.10-9.60/18.20-14.30	16/16	05x16	04+04	Yes/Si	Acerbi, Benalu, Crane Fruehauf, SMB, Trailor
L-973		FU/4/5/4	19842/19843 00		419.00	12-C/12-C	219.10	18.20-14.30/18.10-9.60	12/12		04+04	Optional	Fruehauf, Highway, Meritor, Northern, Scammell, Van Hool, York
L-975		GG/140	19351 00		394.00	01-SF	152.40	12.70			04	No	Bedford, DAF, Iveco, Renault
L-976		GG/142/1	19371 00		394.00	18-C	203.20	12.70	18		04	No	AEC, Bedford, DAF, Dennis, ERF, Renault, Scammell
L-977		GG/144	17555 00		330.00	01-SF	101.60	9.50			04	No	DAF, Iveco, Renault
L-978		GG/147/148	17556/558 00		308.00	01-SF	101.60	7.50			02+02	No	DAF, Iveco, Renault
L-979		GG/149	15563 00		330.00	01-SF	76.20	8.00			04	No	Bedford, Dodge, Ford, Karrier
L-980		GG/164	17663 00		330.00	01-SF	127.00	9.50			02+02	No	DAF, Iveco, Renault
L-981		GG/83/1	19072 00		394.00	12-A	152.40	12.70	12		04	Optional	AEC, Bedford, Bristol, Brockhouse, Carrimore, Crane Fruehauf, DAF, Dennis, Dyson, ERF, Guy
L-982		GG/83/2			394.00	12-A	152.40	12.70	12		04	Optional	
L-983		GG/92/1	19111 00		394.00	18-C	177.80	12.70	18		04	Optional	AEC, Bedford, Crane Fruehauf, DAF, Dennis, Dennison, ERF, Guy, Iveco, Nissan, Pegaso, Pitt

WI - Wear Indicator / *ID - Indicador de Desgaste*

LonaFlex.	FRAS-LE	BFMC	WVA	FMSI					#			WI - ID	
L-986		IL/66/67/5	19840/841 00		419.00	12-C/12-C	177.80	18.20-14.30/18.10-9.60	12/12		04+04	Optional	Baj et Fond, Benalu, Brockhouse, Crane Fruehauf, Dyson, Fox, Meritor, Pitt, SAF/ Sauer, Titan, Van Hool, York
L-987		IL/66/67/8			419.00	12-C/12-C	177.80	18.20-14.30/18.10-9.60	12/12		04+04	Yes/Si	
L-988	**IV/160**	RW/29/32/33/1	19716 00		410.00	12-K/12-L/12-L	199.60	22.10-11.90/22.20-13.90/21.20-12.50	12/12/12	08x15	02+02+04	Yes/Si	ERF, Iveco, Meritor, Rockwell
L-991			17157 05		394.00	12-A	127.00	18.50	12	10-12	04	Optional	DAF
L-994		LE/64/1/2	19178/179 00		394.00	17-A/17-B	177.80	15.00	17/17	10-12	02+02	No	Albion, Brossel, DAF, Leyland, Scammell
L-995		MB/103/1	15836 00		304.00	10-A	90.00	11.50/7.20	10	08x15	04	Yes/Si	Mercedes-Benz
L-996		MB/104/105/1	19844/845 00		360.00	06-E/08-B	160.00	13.50-11.30/13.50-8.00	06/08	08x15	04+04	Yes/Si	Mercedes-Benz
L-997		MB/107/108/1	15869/870 00		300.00	12-A/14-A	87.50	9.30	12/14	06x15	02+02	Yes/Si	Mercedes-Benz
L-998		MB/109/1	17927 20		308.00	10-A	105.00	13.50/9.20	10	08x15	04	Yes/Si	Mercedes-Benz
L-1002		MB/115/1	17929 20		308.00	10-A	135.00	13.50/9.20	10	08x15	04	Yes/Si	Mercedes-Benz
L-1003		MB/116/1	15836 20		308.00	10-A	90.00	13.50/9.20	10	08x15	04	Yes/Si	Mercedes-Benz
L-1004		MB/120/121/2	19078/112/505 20		364.00	06-E/08-B/08-I	200.00	15.50-10.00/15.50-13.30	08/06	08x12	02+02+04	Yes	Mercedes-Benz
L-1005		MB/120/2	19505 20		364.00	08-I	200.00	15.50/10.00	08	08x12	02	Yes/Si	Mercedes-Benz
L-1006	**MB/145**	MB/82/83/1	17795/796 00		410.00	08-A/10-A	140.00	17.60-7.80/17.70-15.20	10/08	08x15	04+04	Yes/Si	Mercedes-Benz
L-1007		MB/48/2	17258 00		408.00	08-A	100.00	10.00	08	13-10	08	No	Mercedes-Benz, TATA
L-1009		MB/58/3	19466 00		408.00	10-N	220.00	19.20	10	08x15	08	Optional	Mercedes-Benz
L-1010		MB/61	19125 00		370.00	01-SF	160.00	19.40			08	No	Auwarter, Mercedes-Benz
L-1011		MB/67/1	17297 00		418.00	08-A	100.00	15.00	08	08x15	08	Optional	Auwarter, Mercedes-Benz
L-1012		MB/69/70/1	15349/350 90		300.00	12-A/14-A	69.00	9.00	14/12	06x10	02+02	Optional	Mercedes-Benz
L-1013		MB/71/1	17409 00		300.00	10-A	135.00	10.60	10	08x15	04	Optional	Mercedes-Benz
L-1014		MB/84/85/1	19632/633 00		410.00	08-B/10-C	180.00	17.70-15.20/17.60-7.80	08/10	08x18	04+04	Yes/Si	Sanos
L-1015		MB/96/1	17927 00		308.00	10-A	105.00	11.50/7.20	10	08x15	04	Yes/Si	Mercedes-Benz
L-1018		MB/97/1/2	17280/928 00		304.00	10-A/10-G	120.00	11.50/7.20	10/10	08x15	02+02	Yes/Si	Mercedes-Benz
L-1019		MB/98/99/1	17949/950 00		360.00	06-A/08-A	130.00	13.50-8.00/13.50-11.30	08/06	08x15	04+04	Yes/Si	Mercedes-Benz, SOR
L-1020		MP/30/2	17238 00		410.00	08-H	140.00	17.30/12.10	08	08x20	08	Yes/Si	MAN, Mercedes-Benz, Renault
L-1021		MP/30/1/2	17683/17238 00		410.00	08-A/08-H	140.00	17.30/12.10	08	08x20	06+02	Yes/Si	Mercedes-Benz
L-1022		MP/31/1/2	19486/494 00		410.00	08-B/08-I	160.00	17.30/12.10	08/08	08x20	06+02	YES	Mercedes-Benz
L-1023		MP/32/1/2	19487/495 00		410.00	08-B/08-D	180.00	17.30/12.10	08/08	08x20	06+02	YES	MAN, Mercedes-Benz, Optare, Renault, Van Hool
L-1024		MP/36/1/2	19488/496 00		410.00	08-B/08-D	220.00	17.30/12.10	08/08	08x20	06+02	YES	Mercedes-Benz
L-1025		NN/24			292.00	01-SF	55.00	6.50			04	No	Datsun
L-1026		NN/34			204.00	01-SF	34.00	4.00			02	No	Daihatsu
L-1027		NN/37			229.00	01-SF	40.00	4.50			04	No	Datsun
L-1028		OP/18/1	13113 00		230.00	12-A	50.00	5.00	12		04	No	Opel
L-1029		OP/20	13189 00	8026	200.00	01-SF	45.00	5.00			04	No	Opel
L-1030		OP/24/1	10125 00		200.00	10-K	28.00	5.00	10		04	No	Opel
L-1031		PB/16/17/1	19849/850 00		410.00	08-A/08-L	160.00	17.40-6.40/17.50-15.70	08/08	10x18	04+04	No	Auwarter, Kässbohrer, Menarini, Perrot
L-1032		PB/18/19/1	19847/848 00		410.00	12-E/12-I	220.00	17.50-15.70/17.40-6.40	12/12	10x18	04+04	No	Auwarter, Kässbohrer, Perrot, Van Hool
L-1033		RN/100/1	19934 00		414.00	08-A	150.00	18.50	08	08x18	08	Yes/Si	Renault
L-1034		RN/78/1	11114 00		228.00	08-A	40.00	5.00	08		04	No	Chrysler, Renault
L-1035		RW/1/2/1			419.00	12-C/12-C	203.20	18.20-14.30/18.10-9.60	12/12		04+04	Optional	Foden, Fox, Merryworth, Rockwell
L-1036		RW/1/2/3	19365/366 00		419.00	12-C/12-C	203.20	18.10-9.60/18.20-14.30	12/12		04+04	Yes/Si	Baj et Fond, Crane Fruehauf, Kaiser, Meritor, Merriworth, SAE (Dupillier), Samro, Scammell, Trailor, Van Hool
L-1037		RW/34/35/1	19030/033 00		420.00	12-C/12-C	177.80	21.70-16.40/21.60-11.00	12/12	10-10	04+04	Yes/Si	Meritor
L-1039		SJ/24/25/1	19517/518 00		300.00	08-A/08-A	150.00	15.60-7.60/15.70-12.00	08/08	08x18	04+04	Yes/Si	SAE (Dupillier), SAF/Sauer, Trailor
L-1040		SJ/26/27/1	19892/893 00		355.00	10-A/10-A	200.00	18.50-9.10/18.60-14.40	10/10	08x18	04+04	Yes/Si	SAE (Dupillier), SAF/Sauer, Trailor
L-1042		SJ/32/33/1	19479/480 00		367.00	08-A/08-A	180.00	20.80-16.00/20.70-10.70	08/08	08x18	04+04	Yes/Si	SAF/Sauer
L-1048		TY/9			260.00	01-SF	50.00	4.80			04	No	Toyota
L-1049	**VV/309**	VL/83/84/1	19885/886 00		394.00	09-A/12-E	239.50	19.00-11.70/19.00-14.80	12/09	10-10	04+04	Yes/Si	Volvo
L-1050	**VW/277**	DK/30/1	11575 00		230.00	10-A	38.60	5.00	10		04	No	Audi, Volkswagen
L-1051	**VW/278**		11065 00		230.00	10-A	38.60	5.00	10		04	No	Audi, Volkswagen

LonaFlex.	FRAS-LE	BFMC	WVA	FMSI					#	T		WI - ID	
L-1052	**IV/164**	RW/38/39/1	19116/119 00		410.00	12-K/12-L	199.60	21.96-15.60/21.60-13.70	12		04+04	Yes/Si	Iveco
L-1053				1501	320.00	06-A	120.00	12.00	06		08	Yes/Si	Mitsubishi Fuso
L-1054				1502	320.00	06-A	140.00	12.00	06		08	Yes/Si	Mitsubishi Fuso
L-1055		MB/51/1	19160 00	1302	440.00	08-A	170.00	15.00	08	08x18	08	No	Mercedes-Benz
L-1056		RW/5/6/4	19613/614 00		419.00	16-B/16-B	177.80	19.40-10.90/19.50-15.60	16/16		04+04	Yes/Si	Crane Fruehaulf, DAF, Foden, Meritor, Optare, Seddon Atkinson
L-1057				1464	320.10	06-A	135.00	12.00	06		08	Yes/Si	Nissan U.D.
L-1058				4734	410.00	15-B	179.60	16.20	15		08	Yes/Si	Chevrolet Truck, GMC Truck
L-1059	**FD/165**				325.00	10-Q/10-R	150.00	15.90-8.00/16.00-12.80	10/10	10-08	04+04	Yes	Ford
L-1060	**F/1121**	NN/100/1			413.00	16-B	176.00	16.60	17		08	Yes	Nissan
L-1061	**F/1122**	NN/101/1			413.00	17-D	216.00	16.60	17		08	Yes	Nissan
L-1062	**IV/159**	RW/29/1/2			410.00	12-K/12-L	199.60	21.20/12.50	12	08x15	06+02	Yes/Si	ERF, Iveco, Meritor, Rockwell
L-1063	**IV/161**	RW/28/1/2			410.00	12-K/12-L	180.00	21.20/12.50	12	08x15	02+06	Yes/Si	Iveco, Meritor, Rockwell
L-1065	**F/762**	SY/20/2/26/1			325.00	12-A/14-A	120.00	12.20	12/14		04	Yes/Si	Iveco
L-1068	**F/1152**				325.00	12-A/14-A	120.00	12.20	12/14		04	Yes/Si	Iveco
L-1069	**F/1096**				406.00	12-G	151.50	15.50	12		08	Yes	Hino

Remarks/*Notas:*			
T "#"	Blank column: item is supplied undrilled only. *Columna en blanco: el ítem es suministrado sin perforar.*		Length. *Desarrollo interno.*
	Drum diameter. *Diámetro tambor.*		Thickness. *Espesor.*
	Width. *Ancho.*		Pcs/Set. *Piezas/Juego.*
	Drilling Diagram. *Diagrama de Perforación.*		

Norma	Type/Tipo	Dimensions / Dimensiones (mm)		
		A	B	C
SAE	4 - 3	3.6	4.8	8.0
	4 - 4	3.6	6.4	8.0
	4 - 5	3.6	8.0	8.0
	4 - 6	3.6	9.5	8.0
	4 - 7	3.6	11.0	8.0
	5 - 4	3.6	6.4	9.5
	5 - 5	3.6	8.0	9.5
	5 - 6	3.6	9.5	9.5
	5 - 7	3.6	11.0	9.5
	6 - 16	6.0	16.0	16.0
	7 - 3	4.8	4.8	9.5
	7 - 5	4.8	8.0	9.5
	7 - 6	4.8	9.5	9.5
	7 - 7	4.8	11.0	9.5
	7 - 8	4.8	13.0	9.5
	7 - 10	4.8	16.0	9.5
	7 - 12	4.8	19.0	9.5
	8 - 8	4.8	13.0	13.0
	8 - 10	4.8	16.0	13.0
	8 - 12	4.8	19.0	13.0
	8 - 14	4.8	22.0	13.0
	8 - 16	4.8	25.0	13.0
	10 - 6	6.4	9.5	13.0
	10 - 9	6.4	14.3	13.0
	10 - 10	6.4	16.0	13.0
	10 - 12	6.4	19.0	13.0
	10 - 14	6.4	22.0	13.0
	10 - 16	6.4	25.0	13.0
	11 - 5	4.0	8.0	8.0
	13 - 12	8.0	19.0	16.0
	13 - 14	8.0	22.0	14.0
	13 - 16	8.0	25.0	14.0
DIN	8 x 15	8.0	15.0	16.0
	8 x 16	8.0	16.0	16.0
	8 x 18	8.0	18.0	16.0
	8 x 20	8.0	20.0	16.0
	8 x 22	8.0	22.0	16.0
	VOLVO	6.2	19.0	12.5

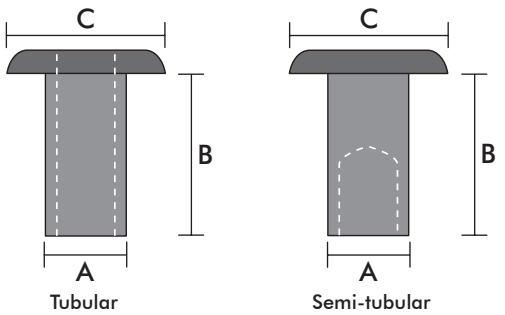

A =	Shank diameter/Diámetro del cuerpo
B =	Length/Largo del cuerpo
C =	Head diameter/Diámetro de la cabeza

Fras-le recommends the utilization of tubular or semi-tubular rivets, either of brass or brass-plated steel. The recommended riveting force for rivets with diameter between 6mm and 8mm is 2400kgf + /- 100kgf.

Fras-le recomienda la utilización de remache tubular o semitubular, de latón o de acero latonado. La fuerza de remachado recomendada para remaches de diámetro entre 6mm y 8mm es de 2400kgf +/- 100kgf.

01-SF

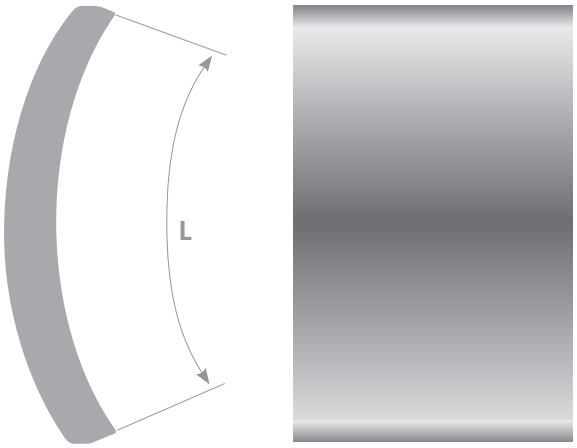

FRAS-LE	BFMC	WVA	FMSI	LonaFlex	PART TYPE	L
			4621	**L-897**		121.60
FD/61-S/F				**L-762**		133.50/167.00
FD/64-S/F				**L-726**		133.50/167.00
FI/96-S/F				**L-558-S/F**		140.30
FD/63-S/F				**L-556**		148.40/152.80
	MB/61	19125 00		**L-1010**		155.50
F/772				**L-752**		157.70/157.70
F/1101						160.00
FI/91-S/F				**L-555**		162.60
FD/98-S/F				**L-764**		165.20
FI/97-S/F				**L-763**		168.00
			8017	**L-916**		180.70
			2165-T			181.10/213.60
F/1140						183.50
	SY/23	19245 00				185.70
	OP/20	13189 00	8026	**L-1029**		185.80
			8026	**L-1029**		185.80
	BC/39	17115 00		**L-937**		191.80
LD/124-S/F				**L-216**		194.00
F/1137						194.90
			1350			202.50
F/886						206.00 / 211.20
	NN/37			**L-1027**		210.80
			4525	**L-886**		212.10
	NN/34			**L-1026**		212.20
			1366			212.40
			2066	**L-878**		217.10/269.60
			2065			228.30/287.20
MB/156-S/F				**L-118**		230.30
			8062			237.40
LD/123-S/F				**L-215**		245.00
	PB/13	19690 00		**L-852**		252.90
F/726				**L-745**		256.00
	TY/9			**L-1048**		260.00
F/727				**L-746**		267.40
			2171-T			271.60/307.50
	GG/164	17663		**L-980**		282.70/340.70
			2146-T	**L-922-T**		283.00/315.90
	NN/24			**L-1025**		288.50
F/1138						291.60
	TY/18			**L-739**		297.10
	TY/19			**L-740**		297.10
	GG/144	17555 00		**L-977**		298.70
	GG/149	15563 00		**L-979**		301.70

01-SF

FRAS-LE	BFMC	WVA	FMSI	LonaFlex	PART TYPE	L
F/943						314.37
F/1132						315.90
F/1133						315.90
	GG/147/148	17556/558 00		**L-978**		317.10/279.10
F/1089			4435			318.10
F/1090						318.10
F/1091						318.10
F/1092						318.10
F/1093	NN/46		1334			318.10
	GG/140	19351 00		**L-975**		320.00
	GG/153	17316 00				320.00
	BO/37/38	15280/281 00				322.30/333.90
	BO/39/40	17229/230 00				322.30/333.90
F/1139						337.80
	BO/35	15245 00				348.90/360.50
			1193	**L-863**		380.20
			1230	**L-867**		381.90
			1290	**L-871**		400.30
	BO/43/44	17479/566 00				402.10/413.70
	BO/55/56	17713/714 00		**L-950**		402.10/413.70
			1254	**L-724**		402.40
			1255	**L-868**		402.40
			1199	**L-866**		409.20
			1196	**L-864**		409.60
RN/212						138.00

04-A

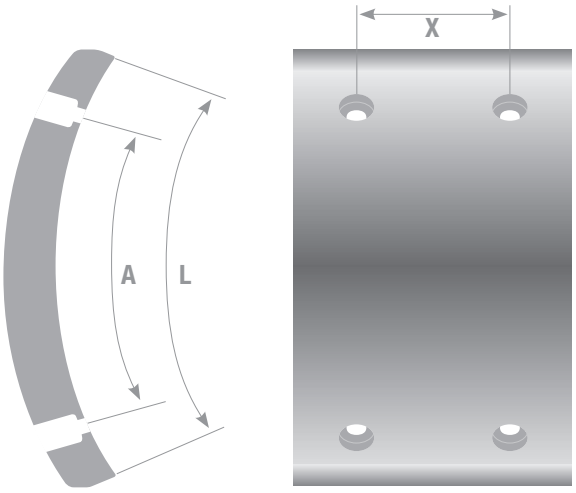

FRAS-LE	BFMC	WVA	FMSI	LonaFlex	PART TYPE	L	X	A
			4607	**L-822**		143.00	101.60	95.30
			4544	**L-505**		147.70	88.90	100.10
			4398	**L-882**		164.20	66.70	115.30
			4227-E	**L-924-E**		167.10	66.70	115.30
			4228-F	**L-925-F**		167.10	92.10	115.30
			4541-C			167.10	111.20	115.30
			4515-B	**L-157-G**	CAM	189.10	136.50	117.00
			4515-B	**L-157-G**	ANC	194.60	136.50	117.00
			4311	**L-358**		196.20	88.90	152.90
			4317	**L-775**		196.20	69.80	152.90
			4317-C	**L-775-C**		196.20	88.90	152.90
			4468	**L-698**		201.90	114.30	146.30

04-E

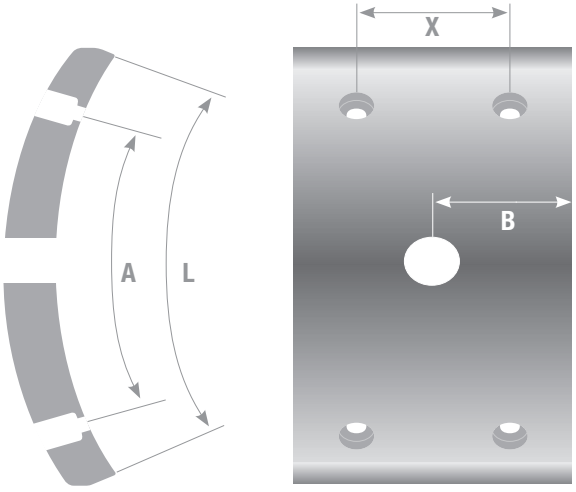

FRAS-LE	BMFC	WVA	FMSI	LONAFLEX	PART TYPE	L	X	A	B
			4398-B	**L-882-B**		164.20	66.70	115.30	63.50
			4541-B	**L-930-B**		167.10	111.20	115.30	101.60

06-A

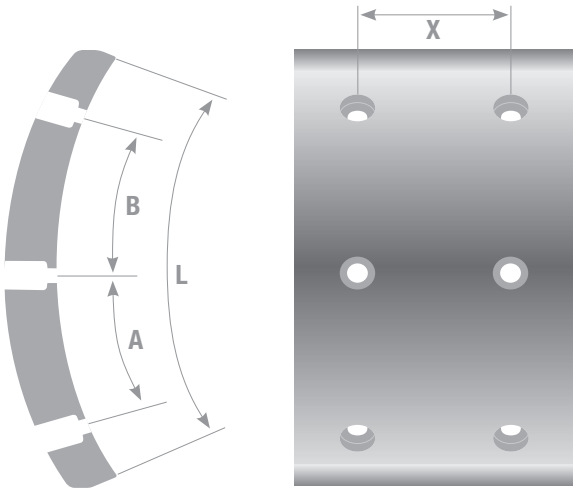

FRAS-LE	BFMC	WVA	FMSI	LonaFlex	PART TYPE	L	X	A	B
	MB/111/112/1	17949/950 20		**L-833**	CAM	130.50	92.00	44.50	44.50
	MB/98/99/1	17949/950 00		**L-1019**	CAM	130.50	92.00	44.50	44.50
			4661-C	**L-934-A**	ANC	130.90	76.20	49.50	49.50
			4661-C	**L-934-A**	CAM	130.90	76.20	49.50	49.50
ST/350	SY/23/31/1	19245/782 00		**L-350**	CAM	135.20	115.00	47.50	47.50
			4700	**L-907**	ANC	135.50	76.20	49.50	49.50
			4700	**L-907**	CAM	135.50	76.20	49.50	49.50
			4536	**L-504**	ANC	135.50	82.50	45.60	45.60
			4536	**L-504**	CAM	135.50	82.50	49.50	49.50
			4536-A	**L-504-A**	ANC	135.50	82.50	45.60	45.60
			4536-A	**L-504-A**	CAM	135.50	82.50	49.50	49.50
	FH/100 F		1410	**L-772**		143.40	70.10	54.20	54.20
	FH/100 R		1434	**L-770**		143.40	80.00	54.20	54.20
			1464			143.40	85.00	54.20	54.20
F/1073						143.40	85.00	54.90	54.90
FD/77				**L-219**	CAM	143.60	60.00	49.90	49.90
			1501	**L-1053**		143.70	70.00	54.40	54.40
			1502	**L-1054**		143.70	90.00	54.40	54.40
FD/77				**L-219**	ANC	144.20	60.00	49.90	49.90
F/949				**L-963**		144.20	79.00	55.40	55.40
			4665	**L-902**		173.10	101.60	60.90	59.30
			4690	**L-905**	ANC	173.10	101.60	60.90	59.30
			4690	**L-905**	CAM	173.10	101.60	60.90	59.30
FD/80				**L-661**	w/GROOVE	179.70	101.60	74.80	74.80
FD/80				**L-661**	w/o GROOVE	179.70	101.60	74.80	74.80
F/926		19086 00		**L-801**		184.00	100.00	71.00	71.00
F/925		17406 00	1490	**L-800**		184.00	80.00	71.00	71.00
	NN/40/1			**L-789**		184.00	80.00	71.00	71.00
			4515-A	**L-157-F**	CAM	189.10	135.50	58.50	83.30
			4551-C	**L-696-C**	CAM	189.10	177.80	70.90	70.90
			4524-C	**L-503-C**	CAM	189.10	85.70	70.90	70.90
SV/222	SV/7/1	15185 00		**L-135**		192.60	60.00	78.30	78.30
			4515-A	**L-157-F**	ANC	194.60	136.50	58.50	83.30
			4551-C	**L-696-C**	ANC	194.60	177.80	70.90	70.90
			4524-C	**L-503-C**	ANC	194.60	85.70	70.90	70.90
			4471-A	**L-926-A**	CAM	195.80	136.50	64.00	64.00
			4311-B	**L-358-B**		196.20	88.90	76.50	76.50
			4471-A	**L-926-A**	ANC	201.30	136.50	64.00	64.00
			4527-B	**L-928-B**		212.10	101.60	80.50	80.50
			4350	**L-881**		241.90	88.90	89.70	89.70
			4354-A	**L-588**		262.50	69.80	108.70	108.70

06-C

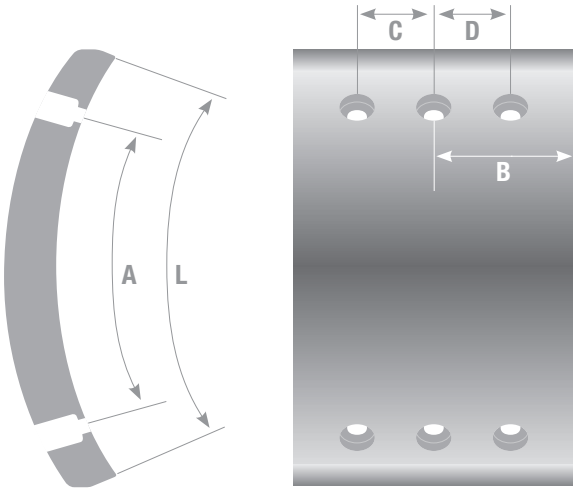

FRAS-LE	BMFC	WVA	FMSI	LonaFlex.	PART TYPE	L	X	A	B	C	D
			4592-A	**L-931-A**		167.10		115.30	127.00	76.20	76.20

06-E

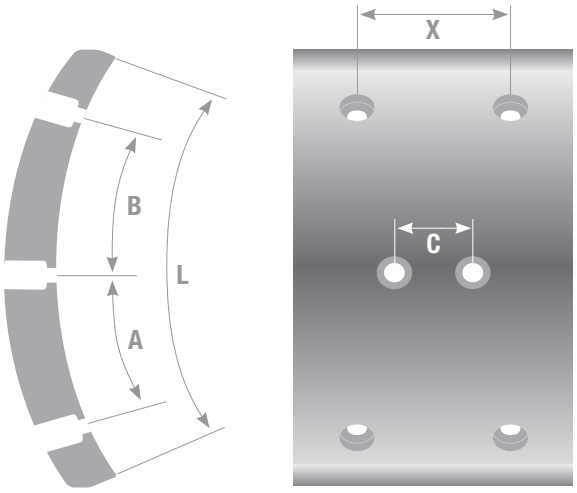

FRAS-LE	BFMC	WVA	FMSI	LonaFlex.	PART TYPE	L	X	A	B	C
	MB/104/105/1	19844/845 00		**L-996**	CAM	130.50	120.00	44.50	44.50	92.00
	MB/113/114/1	19844/845 20		**L-835**	CAM	130.50	120.00	44.50	44.50	92.00
	MB/120/121/1	19078/112 20		**L-834**	CAM	130.50	160.00	44.50	44.50	92.00
	MB/120/121/2	19078/112/505 20		**L-1004**	CAM	130.50	160.00	44.50	44.50	92.00

06-K

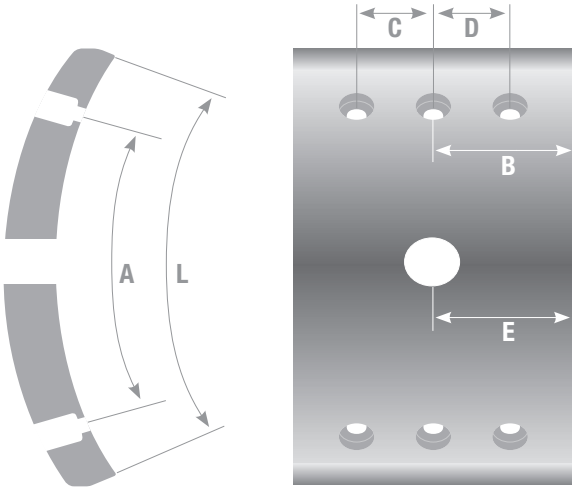

FRAS-LE	WVA	BFMC	FMSI	LonaFlex.	PART TYPE	L	X	A	B	C	D	E
			4592			167.20		115.30	127.00	76.20	76.20	127.00

08-A

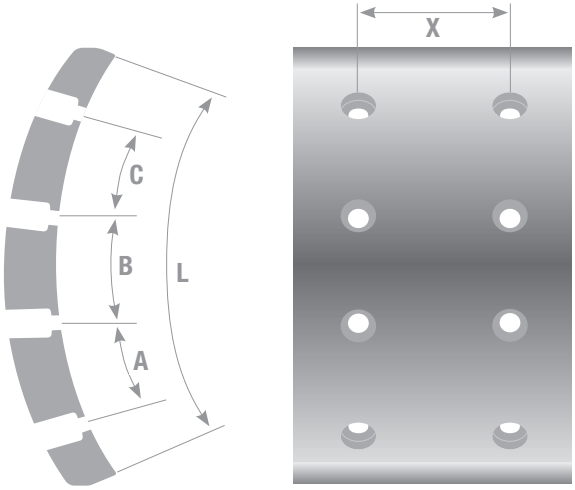

FRAS-LE	BFMC	WVA	FMSI	LonaFlex.	PART TYPE	L	X	A	B	C
	SJ/24/25/1	19517/518 00		**L-1039**	ANC	129.10	100.00	28.40	28.40	28.40
	SJ/22/23/1	19515/516 00		**L-828**	ANC	129.10	130.00	28.40	28.40	28.40
VW/274			1354	**L-645**		130.10	14.00	38.40	38.40	38.40
	SJ/24/25/1	19517/518 00		**L-1039**	CAM	131.70	100.00	31.00	31.00	31.00
	SJ/22/23/1	19515/516 00		**L-828**	CAM	131.70	130.00	31.00	31.00	31.00
TY/253				**L-700**		132.60	21.00	39.80	39.80	39.80
FD/66				**L-620**		133.50	22.20	34.10	47.50	34.10
FD/58				**L-562**	CAM	143.60	78.00	47.10	26.10	26.10
	LZ/2/3/1	19762/763 00			ANC	143.70	130.00	36.60	36.60	36.60
	LZ/2/3/1	19762/763 00			CAM	143.70	130.00	36.60	36.60	36.60
FD/58				**L-562**	ANC	144.20	78.00	44.60	27.30	27.30
	BC/79/1	19573 00		**L-938**		145.40	100.00	38.10	38.10	38.10
	BC/80/1	19574 00		**L-823**		145.40	130.00	38.10	38.1	38.10
F/746				**L-747**		148.80	20.00	41.20	41.20	41.20
FD/65				**L-625**		153.30	20.00	44.50	44.50	44.50
			4528-A	**L-929-A**		157.40	88.90	48.10	48.10	48.10
	BC/104/105/1	19952/953 00		**L-936**	CAM	158.70	120.00	40.10	40.10	40.10
	BC/100/101/1	19902/903 00		**L-815**	CAM	158.70	150.50	40.10	40.10	40.10
			2011	**L-121**	PRIMARY	160.00	30.10	43.80	43.80	43.80
VV/248	VL/70/71/1	17664/665 00	4696	**L-705**	CAM	160.00	91.00	40.00	40.00	40.00
VW/273	VN/15/1	10186 00		**L-548**		163.20	14.00	48.90	48.90	48.90
			4504-A	**L-927-A**		163.50	114.30	48.10	48.10	35.30

08-A

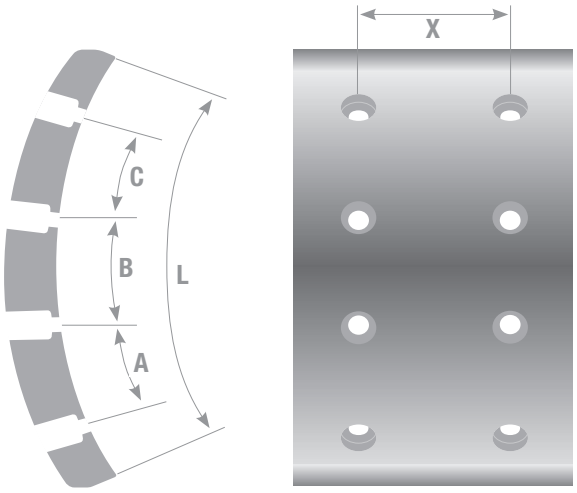

FRAS-LE	BFMC	WVA	FMSI	LonaFlex	PART TYPE	L	X	A	B	C
	SJ/32/33/1	19479/480 00		**L-1042**	ANC	170.30	130.00	43.70	43.70	43.70
	SJ/32/33/1	19479/480 00		**L-1042**	CAM	170.30	130.00	43.70	43.70	43.70
	SJ/34/35/1	19490/491 00		**L-855**	ANC	170.30	150.00	43.70	43.70	43.70
	SJ/34/35/1	19490/491 00		**L-855**	CAM	170.30	150.00	43.70	43.70	43.70
FD/86			4702	**L-222**	CAM	171.20	79.40	53.20	53.20	22.60
			4703	**L-909**	CAM	171.20	85.70	53.20	53.20	22.60
FD/83			4693	**L-728**		173.30	78.40	48.60	45.30	35.60
FD/85				**L-221**		173.30	120.00	48.60	45.30	35.60
	MB/111/112/1	17949/950 00		**L-833**	ANC	173.60	92.00	44.50	44.50	44.50
	MB/98/99/1	17949/950 00		**L-1019**	ANC	173.60	92.00	44.50	44.50	44.50
MB/145	MB/145	17795/796 00		**L-1006**	CAM	173.70	92.00	45.10	45.10	45.10
FI/90				**L-550**		174.60	18.00	51.60	51.60	51.60
DF/235	DF/44/45/1	19010/011 00		**L-836**	CAM	175.60	85.00	46.10	46.10	46.10
	GG/217/1	17017 00		**L-849**		175.80	104.00	32.80	53.60	53.60
FD/86			4702	**L-222**	ANC	177.10	79.40	53.20	53.20	22.60
			4703	**L-909**	ANC	177.10	85.70	53.20	53.20	22.60
VV/296	VL/85/1	17992 00		**L-709**		177.10	90.00	47.10	45.40	45.40
			4729	**L-915**		177.40	78.40	48.40	40.50	40.60
	DF/34/35/1	19900/901 00		**L-960**	CAM	177.40	85.00	46.10	46.10	46.10
MB/177	MP/29/1	17682 00	4694	**L-652-B**		178.00	72.00	45.40	45.40	45.40
MB/182			4697	**L-652-B**		178.00	92.00	45.40	45.40	45.40
MB/183	MP/30/1	17683 00	4695	**L-651**		178.00	92.00	45.40	45.40	45.40
	MP/30/1	17238/683 00		**L-1021**		178.00	92.00	45.40	45.40	45.40
CB/53				**L-142**		178.40	83.00	50.00	46.70	36.70
CB/54				**L-144**		178.40	83.00	50.00	46.70	36.70
DF/235	DF/44/45/1	19010/011 00		**L-836**	ANC	179.20	85.00	46.10	46.10	46.10
FI/117				**L-627**	w/GROOVE	179.70	120.60	49.90	49.90	49.90
FI/117				**L-627**	w/o GROOVE	179.70	120.60	49.90	49.90	49.90
CB/42				**L-538**	PRIMARY	180.10	25.00	52.40	52.40	52.40
	DF/34/35/1	19900/901 00		**L-960**	ANC	180.90	85.00	46.10	46.10	46.10
			4595	**L-892**		180.90	114.30	48.30	48.30	48.30
	MB/60/1	17276 00		**L-737**		181.50	100.00	41.90	59.30	41.90
	RN/100/1	19934 00		**L-1033**		185.40	80.00	47.00	47.00	57.00
	RN/101/1	19935 00		**L-742**		185.40	115.00	47.00	47.00	47.00
			8049	**L-321**	PRIMARY	185.50	20.00	52.30	52.30	52.30
	RN/78/1	11114 00		**L-1034**		185.50	20.00	52.30	52.30	52.30
	MB/51/1	19160 00	1302	**L-873**		186.00	120.00	42.90	60.80	42.90
ST/350	SY/23/31/1	19245/782 00		**L-350**	ANC	186.10	115.00	47.50	47.50	47.50
ST/351	SY/24/1	19246 00		**L-351**		186.10	125.00	47.50	47.50	47.50
	SJ/28/29/1	19283/284 00		**L-858**	CAM	188.90	130.00	49.60	49.60	49.60
	SJ/30/31/1	19477/478 00		**L-831**	CAM	188.90	150.00	49.60	49.60	49.60
			4549	**L-887**	CAM	189.10	69.80	58.50	58.50	24.80

08-A

FRAS-LE	BFMC	WVA	FMSI	LonaFlex	PART TYPE	L	X	A	B	C
			4549-C	**L-887-C**	CAM	189.10	69.80	58.50	58.50	24.80
	CW/1/1		4610	**L-894**		189.10	69.80	64.10	64.10	28.80
			4514-F	**L-136-A**	CAM	189.10	85.70	58.50	58.50	24.80
			4524	**L-503**	CAM	189.10	85.70	58.50	58.50	24.80
			4524-A	**L-503-A**	CAM	189.10	85.70	58.50	58.50	24.80
			4524-B	**L-502**	CAM	189.10	85.70	58.50	58.50	24.80
	IL/68/69/1	19088/089 00	4514	**L-136**	CAM	189.10	85.70	58.50	58.50	24.80
	CW/2/1		4615	**L-854**		189.10	88.90	64.10	64.10	28.80
			4720	**L-642**	CAM	189.10	92.10	58.50	39.00	44.30
	CW/3/1	19502 00	4605	**L-845**		189.10	114.30	64.10	64.10	28.80
F/923				**L-798**		191.30	86.00	52.80	52.80	52.80
SV/224	SV/26/1	17161 00		**L-311**		192.60	80.00	58.70	58.70	39.20
	SJ/28/29/1	19283/284 00		**L-858**	ANC	194.40	130.00	49.60	49.60	49.60
	SJ/30/31/1	19477/478 00		**L-831**	ANC	194.40	150.00	49.60	49.60	49.60
			4549	**L-887**	ANC	194.60	69.80	58.50	58.50	24.80
			4549-C	**L-887-C**	ANC	194.60	69.80	58.50	58.50	24.80
			4514-F	**L-136-A**	ANC	194.60	85.70	58.50	58.50	24.80
			4524	**L-503**	ANC	194.60	85.70	58.50	58.50	24.80
			4524-A	**L-503-A**	ANC	194.60	85.70	58.50	58.50	24.80
			4524-B	**L-502**	ANC	194.60	85.70	58.50	58.50	24.80
	IL/68/69/1	19088/089 00	4514	**L-136**	ANC	194.60	85.70	58.50	58.50	24.80
			4720	**L-642**	ANC	194.60	92.10	58.5	37.20	46.10
	NN/60/1	17341 00	4737	**L-792**		195.60	78.00	52.40	54.00	52.40
	PB/16/17/1	19849/850 00		**L-1031**	ANC	196.00	120.00	52.40	52.40	52.40
VW/275			1352	**L-478**	PRIMARY	201.10	30.00	58.60	58.60	58.60
			4654	**L-901**	ANC	212.80	85.70	58.50	58.50	42.50
			4654	**L-901**	CAM	212.80	85.70	58.50	58.50	49.60
MB/164	MB/55/1	15123 00	1312	**L-102**		213.00	52.00	57.50	57.50	57.50
MB/140	MB/68/1	17298 00	1310	**L-874**		213.00	72.00	54.10	54.10	54.10
MB/161	MB/48/1	17059 00	1313	**L-101**		213.00	72.00	57.50	57.50	57.50
MB/176	MB/56/2	17259 00	1317	**L-348**		213.00	72.00	54.10	54.10	54.10
MB/179				**L-633**		213.00	72.00	54.10	54.10	54.10
MB/180	MB/65/1	17105 00	1305	**L-501**		213.00	72.00	54.10	54.10	54.10
	MB/48/2	17258 00		**L-1007**		213.00	72.00	54.10	54.10	54.10
	MB/67/1	17297 00		**L-1011**		213.00	72.00	54.10	54.10	54.10
FD/68				**L-528**	PRIMARY	227.80	33.30	65.00	65.00	65.00
			2121-T	**L-547**	PRIMARY	227.80	38.10	65.00	65.00	65.00
			2080-T	**L-500**	PRIMARY	227.80	44.50	65.00	65.00	65.00
CB/51				**L-561**	PRIMARY	227.80	44.50	65.00	65.00	65.00
MB/157				**L-115**	PRIMARY	228.10	44.50	65.10	65.10	65.10
			8124	**L-919**	PRIMARY	232.10	20.00	52.30	52.30	52.30
SV/228	SV/39/2	17991 00		**L-307**		235.00	80.00	62.00	62.00	62.00
			4601		ANC	237.70	69.80	61.30	61.30	61.30
			4601		CAM	237.70	69.80	61.30	61.30	61.30
			2026-AT	**L-529**	PRIMARY	248.00	33.30	70.70	70.70	70.70
MB/142					CAM	194.60	85.70	58.50	58.50	24.80
MB/142					ANC	189.10	85.70	58.50	58.50	24.80
MB/141					CAM	189.10	85.70	58.50	58.50	24.80
MB/141					ANC	194.60	85.70	58.50	58.50	24.80
RN/209						143.70	20.00	44.30	44.30	33.20
4549-A					CAM	189.10	69.85	58.50	58.50	24.80
4549-A					ANC	194.60	69.85	58.50	58.50	24.80

08-B

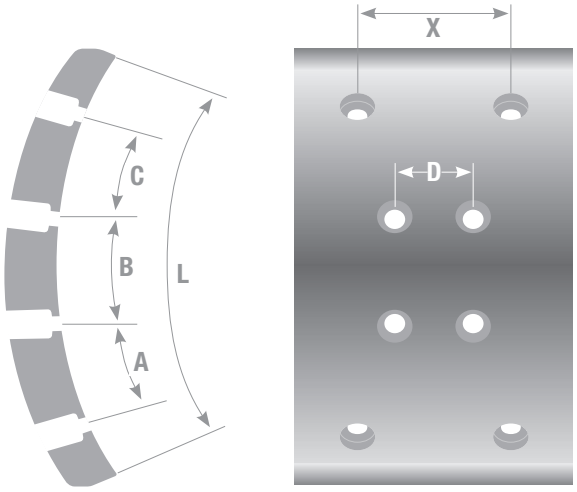

FRAS-LE	BFMC	WVA	FMSI	LonaFlex	PART TYPE	L	X	A	B	C	D
FD/59				**L-559**	ANC	144.20	91.00	44.60	27.30	27.30	81.00
MB/194				**L-511**		150.80	127.20	37.30	37.30	37.30	79.00
MB/195				**L-512**		150.80	127.20	37.30	37.30	37.30	79.00
	MB/104/105/1	19844/845 00		**L-996**	ANC	173.60	120.00	44.50	44.50	44.50	92.00
	MB/113/114/1	19844/845 20		**L-835**	ANC	173.60	120.00	44.50	44.50	44.50	92.00
	MB/120/121/1	19078/112 20		**L-834**	ANC	173.60	160.00	44.50	44.50	44.50	92.00
	MB/120/121/2	19078/112/505 20		**L-1004**	ANC	173.60	160.00	44.50	44.50	44.50	92.00
	MB/84/85/1	19632/633 00		**L-1014**	CAM	173.70	140.00	45.10	45.10	45.10	92.00
MB/146					CAM	173.70	160.00	45.10	45.10	45.10	92.00
MB/190	MB/74/75/1	19579/580 00	4656	**L-131**	CAM	173.70	120.00	45.10	45.10	45.10	92.00
MB/191	MB/76/77/1	19581/582 00	4657	**L-132**	CAM	173.70	180.00	45.10	45.10	45.10	92.00
MB/184	MP/31/1	19486 00	4671	**L-552**		178.00	120.00	45.40	45.40	45.40	92.00
MB/185	MP/32/1	19487 00		**L-551**		178.00	140.00	45.40	45.40	45.40	92.00
MB/188	MP/36/1	19488 00	4672	**L-227**		178.00	180.00	45.40	45.40	45.40	92.00
	MP/31/1/2	19486/494 00		**L-1022**		178.00	120.00	45.40	45.40	45.40	92.00
	MP/32/1/2	19487/495 00		**L-1023**		178.00	140.00	45.40	45.40	45.40	92.00
	MP/36/1/2	19488/496 00		**L-1024**		178.00	180.00	45.40	45.40	45.40	92.00
	RN/104/1	19187 00		**L-817**		184.30	160.00	47.00	47.00	47.00	47.00
MB/181	MB/66/1	19182 00	1304	**L-509**		213.00	120.00	54.10	54.10	54.10	72.00

08-C

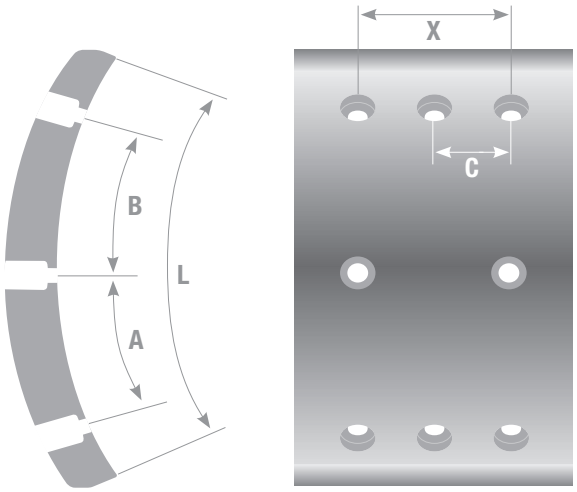

FRAS-LE	BFMC	WVA	FMSI	LonaFlex	PART TYPE	L	X	A	B	C
VV/288				**L-663**	CAM	147.00	120.00	55.00	50.00	60.00

08-D

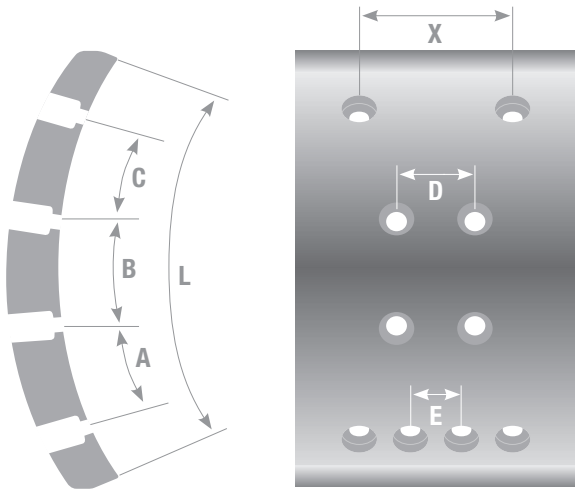

FRAS-LE	BFMC	WVA	FMSI	LonaFlex.	PART TYPE	L	X	A	B	C	D	E
	MP/32/1/2	19487/495 00		**L-1023**		178.00	140.00	45.40	45.40	45.40	92.00	88.00
	MP/32/2	19495 00		**L-884**		178.00	140.00	45.40	45.40	45.40	92.00	88.00
	MP/36/1/2	19488/496 00		**L-1024**		178.00	180.00	45.40	45.40	45.40	92.00	88.00
	MP/36/2	19496 00		**L-771**		178.00	180.00	45.40	45.40	45.40	92.00	88.00

08-F

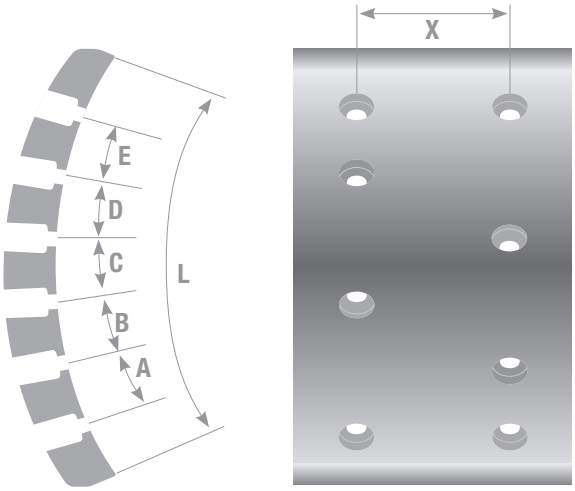

FRAS-LE	BFMC	WVA	FMSI	LonaFlex.	PART TYPE	L	X	A	B	C	D	E
VW/264	VN/2/1	10030 00	881			232.50	14.00	42.60	42.60	42.60	42.60	42.60

08-H

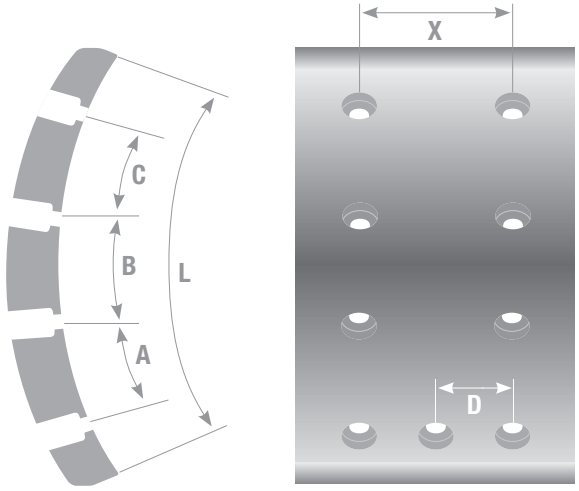

FRAS-LE	BFMC	WVA	FMSI	LonaFlex.	PART TYPE	L	X	A	B	C	D
	MP/30/1/2	17238/683		**L-1021**		178.00	92.00	45.40	45.40	45.40	46.00
	MP/30/2	17238 00		**L-1020**		178.00	92.00	45.40	45.40	45.40	46.00

08-I

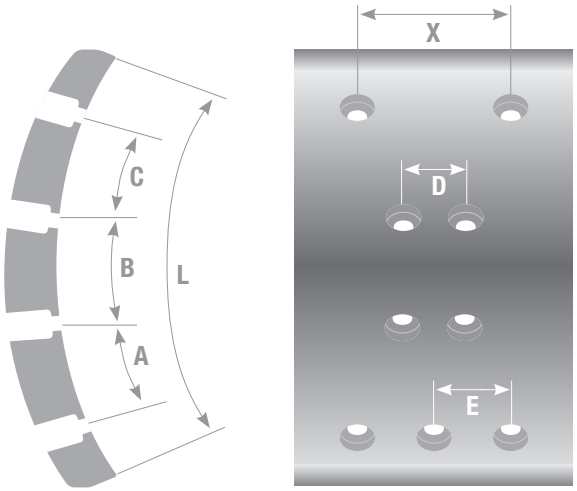

FRAS-LE	BFMC	WVA	FMSI	LonaFlex	PART TYPE	L	X	A	B	C	D	E
	MB/120/2	19505 20		**L-1005**		173.60	160.00	44.50	44.50	44.50	92.00	80.00
	MB/74/75/2	19579/706 00			CAM	173.70	120.00	45.10	45.10	45.10	92.00	60.00
	MB/76/77/2	19581/707 00			CAM	173.70	180.00	45.10	45.10	45.10	92.00	90.00
	MP/31/1/2	19486/494 00		**L-1022**		178.00	120.00	45.40	45.40	45.40	92.00	60.00
	MP/31/2	19494 00		**L-843**		178.00	120.00	45.40	45.40	45.40	92.00	60.00

08-K

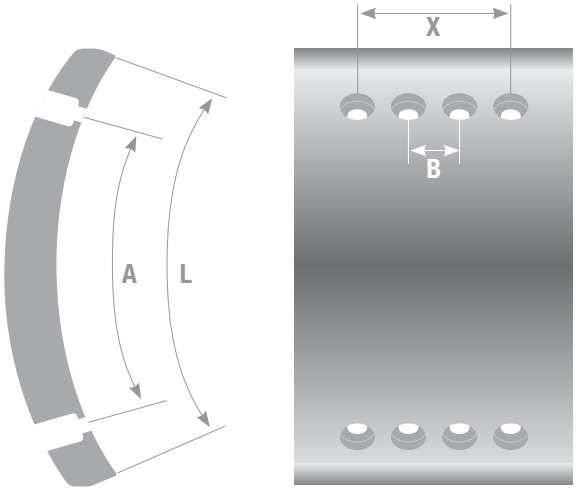

FRAS-LE	BFMC	WVA	FMSI	LonaFlex	PART TYPE	L	X	A	B
			4666	**L-903**		173.10	203.20	120.20	85.80
			4691	**L-906**	ANC	173.10	203.20	120.20	85.80
			4691	**L-906**	CAM	173.10	203.20	120.20	85.80

08-L

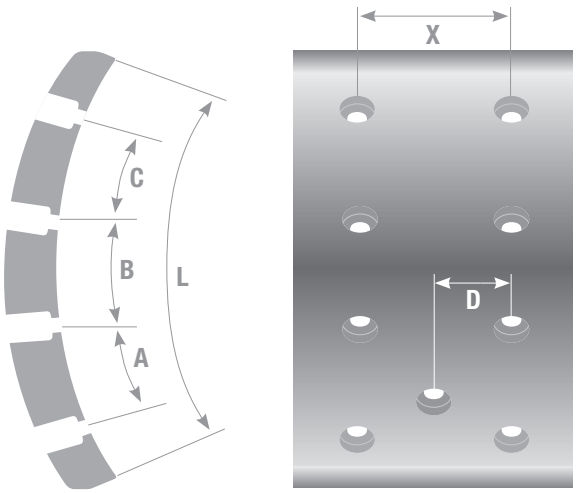

FRAS-LE	BFMC	WVA	FMSI	LonaFlex.	PART TYPE	L	X	A	B	C	D
	PB/16/17/1	19849/850 00		**L-1031**	CAM	196.00	120.00	52.50	52.50	52.50	60.00

08-N

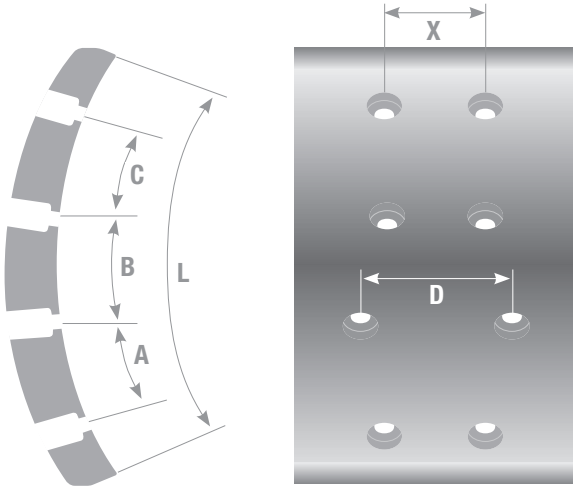

FRAS-LE	BFMC	WVA	FMSI	LonaFlex.	PART TYPE	L	X	A	B	C	D
FD/59				**L-559**	CAM	143.60	91.00	44.60	27.30	27.30	81.00

09-A

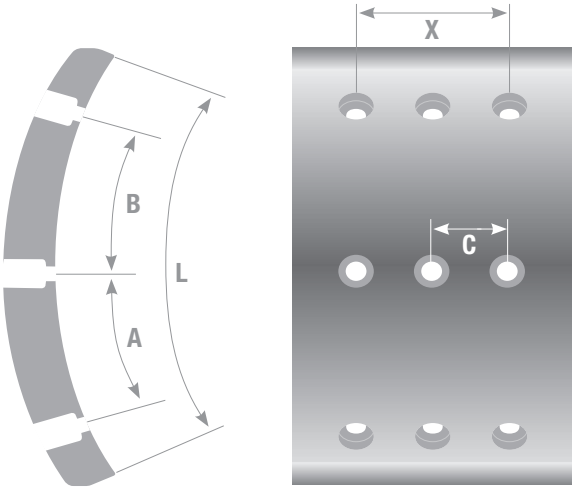

FRAS-LE	BFMC	WVA	FMSI	LonaFlex	PART TYPE	L	X	A	B	C
			4536-B	**L-504-B**	ANC	135.50	82.50	49.50	49.50	41.30
			4536-B	**L-504-B**	CAM	135.50	82.50	45.60	45.60	41.30
VV/250	VL/72/73/1	19467/468 00	4663	**L-706**	CAM	147.00	138.00	55.00	50.00	69.00
VV/289	VL/76/77/1	19562/563 00	4664	**L-664**	CAM	147.00	160.00	55.00	50.00	80.00
VV/309	VL/83/84/1	19885/886 00		**L-1049**	CAM	147.00	190.00	55.00	50.00	95.00
VV/290	VL/81/82/1	19799/800 00	4698	**L-665**	CAM	147.00	204.00	55.00	50.00	102.00
	BT/59/6	19657 00		**L-851**		181.90	136.00	70.70	67.40	68.00
	NN/41/1	19814 00		**L-790**		194.20	120.00	72.60	72.60	60.00

10-A

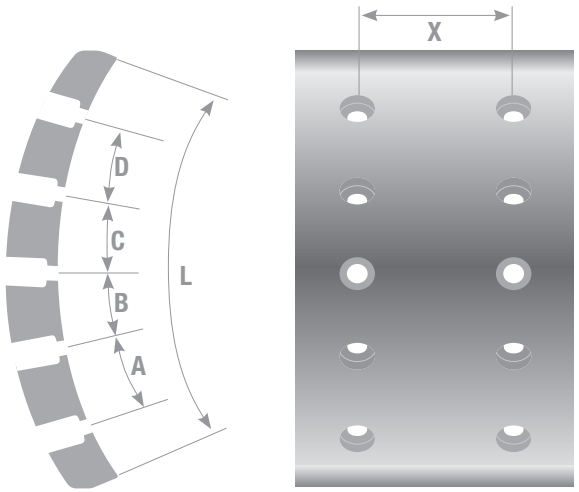

FRAS-LE	BFMC	WVA	FMSI	LonaFlex	PART TYPE	L	X	A	B	C	D
CB/41				**L-245**		152.10	25.00	25.10	41.80	41.80	25.10
	SJ/26/27/1	19892/893 00		**L-1040**	ANC	159.60	130.00	31.50	31.50	31.50	31.50
	SJ/26/27/1	19892/893 00		**L-1040**	CAM	168.00	130.00	31.50	31.50	31.50	31.50
VW/276			1402	**L-646**		168.60	20.00	21.70	43.40	43.40	43.40
CB/38				**L-489**	PRIMARY	169.20	25.40	25.30	50.60	50.60	25.30
CB/39				**L-490**	PRIMARY	169.20	38.10	25.30	50.60	50.60	25.30
CB/43				**L-526**	PRIMARY	173.90	25.00	36.40	36.40	36.40	36.40
AC/10			4716	**L-911**		176.80	107.90	32.10	25.70	40.30	32.10
CB/40			1405	**L-117**		185.80	25.00	41.70	41.70	41.70	41.70
	BC/104/105/1	19952/953 00		**L-936**	ANC	189.20	120.00	40.10	40.10	40.10	40.10
	BC/100/101/1	19902/903 00		**L-815**	ANC	189.20	150.50	40.10	40.10	40.10	40.10
F/939			4739	**L-806**		190.70	100.00	39.80	39.80	39.80	39.80
F/836			1418-A	**L-787**		191.30	95.00	39.60	39.60	39.60	39.60
F/833				**L-759**		191.30	110.00	39.60	39.60	39.60	39.60

10-A

FRAS-LE	BFMC	WVA	FMSI	LonaFlex	PART TYPE	L	X	A	B	C	D
DK/45				**L-120**		192.00	28.00	41.30	41.30	41.30	41.30
F/941				**L-808**		192.30	101.00	39.80	39.80	39.80	39.80
		19720/721 00			ANC	195.30	112.00	37.30	37.30	37.30	37.30
		19720/721 00			CAM	195.30	112.00	37.30	37.30	37.30	37.30
			4223-A	**L-820**		196.20	88.90	36.60	36.60	36.60	36.60
			4719	**L-850**		196.20	95.20	35.70	28.50	42.80	37.40
			4317-G	**L-775-G**		196.20	101.60	36.60	36.60	36.60	36.60
			4725	**L-814**		196.20	107.95	35.70	28.50	42.80	37.40
		19899 00	4311-G	**L-358-G**		196.20	139.70	36.60	36.60	36.60	36.60
			4195-B	**L-378**		197.80	101.60	36.60	36.60	36.60	36.60
VV/248	VL/70/71/1	17664/665 00	4696	**L-705**	ANC	200.00	91.00	40.00	40.00	40.00	40.00
			2012-BT	**L-549**	PRIMARY	201.50	28.20	28.70	57.50	57.50	28.70
	BC/90/91/1	19166/167 00		**L-940**	ANC	203.60	105.00	40.90	40.90	40.90	40.90
	BC/90/91/1	19166/167 00		**L-940**	CAM	203.60	105.00	40.90	40.90	40.90	40.90
	BC/92/93/1	19168/169 00		**L-941**	ANC	203.60	105.00	40.90	40.90	40.90	40.90
	BC/92/93/1	19168/169 00		**L-941**	CAM	203.60	105.00	40.90	40.90	40.90	40.90
	BC/35/1	19200 00		**L-841**		203.90	120.00	41.10	41.10	41.10	41.10
	BC/36/1	19032 00		**L-816**		203.90	120.00	41.10	41.10	41.10	41.10
			1477-TT	**L-920-TT**		203.90	130.00	41.10	41.10	41.10	41.10
F/1128						203.90	150.00	41.10	41.10	41.10	41.10
	BC/37/1	19094 00		**L-738**		203.90	150.00	41.10	41.10	41.10	41.10
	BC/81/1	19825 00		**L-939**		203.90	150.00	41.10	41.10	41.10	41.10
	BC/97/1	19094 97		**L-942**		203.90	150.00	41.10	41.10	41.10	41.10
	BC/98/1	19032 97		**L-943**		203.90	150.00	41.10	41.10	41.10	41.10
			2051-AT	**L-862-AT**	PRIMARY	206.30	40.90	29.40	58.80	58.80	29.40
			855	**L-525**		210.00	22.20	47.70	47.70	47.70	47.70
	FD/50/51/1	13057/058 00	8020	**L-917**	PRIMARY	210.40	20.00	46.20	46.20	46.20	46.20
VW/277	DK/30/1	11575 00		**L-1050**		210.60	20.00	47.90	47.90	47.90	47.90
VW/278		11065 00		**L-1051**		210.80	15.00	47.80	47.80	47.80	47.80
	DF/20/21/2			**L-957**	ANC	211.00	85.00	46.10	46.10	46.10	46.10
	DF/20/21/3	19150/151 00		**L-958**	ANC	211.00	85.00	46.10	46.10	46.10	46.10
DK/44				**L-184**		211.20	28.00	48.00	48.00	48.00	48.00
MB/145	MB/82/83/1	17795/796 00		**L-1006**	ANC	217.10	92.00	45.10	45.10	45.10	45.10
CB/38				**L-489**	SECUNDARY	218.00	25.40	50.60	50.60	50.60	50.60
CB/39				**L-490**	SECUNDARY	218.00	38.10	50.60	50.60	50.60	50.60
	DF/20/21/2			**L-957**	CAM	218.10	85.00	46.10	46.10	46.10	46.10
	DF/20/21/3	19150/151 00		**L-958**	CAM	218.10	85.00	46.10	46.10	46.10	46.10
			2006	**L-518**	PRIMARY	227.80	33.30	65.00	65.00	65.00	65.00
			2006-T	**L-387**	PRIMARY	227.80	33.30	65.00	65.00	65.00	65.00
			8124	**L-919**	SECUNDARY	232.10	20.00	52.30	52.30	52.30	52.30
CB/42				**L-538**	SECUNDARY	232.50	25.00	52.40	52.40	52.40	52.40
CB/48				**L-654**		232.50	25.00	52.40	52.40	52.40	52.40
VW/262	VN/7/1	11268 00	882-A	**L-124**		236.30	20.00	54.20	54.20	54.20	54.20
			8049	**L-321**	SECUNDARY	237.80	20.00	52.30	52.30	52.30	52.30
			1219	**L-122**	PRIMARY	244.30	33.30	54.00	54.00	54.00	54.00
MB/255	MB/64/1	15057 00		**L-569**		247.40	62.00	53.40	53.40	53.40	53.40
	MB/71/1	17409 00		**L-1013**		247.80	72.00	53.40	53.40	53.40	53.40
	MB/93/1	17409 19				247.80	72.00	53.40	53.40	53.40	53.40
VW/255	MP/37/38/1	15817/823 00		**L-141**	PRIMARY	251.30	60.00	49.70	49.70	49.70	49.70
			2012-BT	**L-549**	SECUNDARY	258.90	28.20	57.50	57.50	57.50	57.50
	MB/103/1	15836 00		**L-995**		259.10	62.00	53.90	53.90	53.90	53.90
	MB/116/1	15836 20		**L-1003**		259.10	62.00	53.90	53.90	53.90	53.90
	MB/96/1	17927 00		**L-1015**		259.10	70.00	53.90	53.90	53.90	53.90
	MB/109/1	17927 20		**L-998**		259.10	70.00	53.90	53.90	53.90	53.90
	MB/97/1	17928 00				259.10	72.00	53.90	53.90	53.90	53.90
	MB/97/1/2	17280/928 00		**L-1018**		259.10	72.00	53.90	53.90	53.90	53.90
	MB/102/1	17929 00		**L-840**		259.10	72.00	53.90	53.90	53.90	53.90

10-A

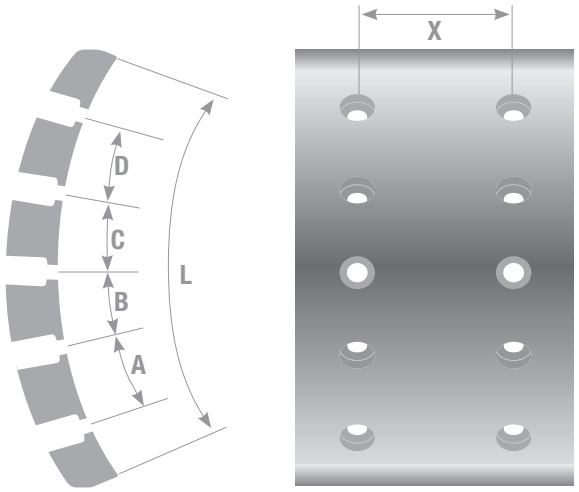

FRAS-LE	BFMC	WVA	FMSI	LonaFlex	PART TYPE	L	X	A	B	C	D
	MB/110/1/2	17280/928 20				259.10	72.00	53.90	53.90	53.90	53.90
	MB/115/1	17929 20		L-1002		259.10	72.00	53.90	53.90	53.90	53.90
VW/271	VN/13/1	11259 00	8081	L-476		259.70	23.00	58.60	58.60	58.60	58.60
VW/272	VN/11/1	11293 00	8078	L-508		259.70	23.00	58.60	58.60	58.60	58.60
VW/270	VN/12/1	13193 00	8080	L-477		259.70	30.00	58.60	58.60	58.60	58.60
VW/275			1352	L-478	SECUNDARY	259.70	30.00	58.60	58.60	58.60	58.60
			2038	L-875	PRIMARY	260.30	33.30	65.00	65.00	65.00	32.50
			2038-T	L-875-T	PRIMARY	260.30	33.30	65.00	65.00	65.00	32.50
			2053	L-877	PRIMARY	260.30	38.10	65.00	65.00	65.00	65.00
			2053-T	L-187	PRIMARY	260.30	38.10	65.00	65.00	65.00	65.00
			2051-AT	L-862-AT	SECUNDARY	265.20	40.90	58.80	58.80	58.80	58.80
CB/52				L-557	PRIMARY	271.00	44.50	70.30	70.30	70.30	35.10
			2042-A	L-147	PRIMARY	278.10	44.50	61.90	61.90	61.90	61.90
FD/71				L-535	PRIMARY	278.10	57.20	61.90	61.90	61.90	61.90
FD/73				L-534	PRIMARY	278.10	57.20	61.90	61.90	61.90	61.90
FD/72				L-577	PRIMARY	278.10	63.50	61.90	61.90	61.90	61.90
			2026-T	L-189	PRIMARY	282.70	33.30	70.70	70.70	70.70	35.30
			2131	L-544	PRIMARY	283.00	44.40	70.20	70.20	70.20	70.20
			2137	L-545	PRIMARY	283.00	57.10	70.20	70.20	70.20	35.10
			1417			291.80	40.00	62.80	62.80	62.80	62.80
F/747			1416			291.80	40.00	62.80	62.80	62.80	62.80
F/1119						291.80	50.0	65.00	70.30	70.30	42.50
			287	L-721		292.80	33.30	65.00	65.00	65.00	65.00
			287-T	L-721-T		292.80	33.30	65.00	65.00	65.00	65.00
			2038	L-875	SECUNDARY	292.80	33.30	65.00	65.00	65.00	65.00
			2038-T	L-875-T	SECUNDARY	292.80	33.30	65.00	65.00	65.00	65.00
FD/68				L-528	SECUNDARY	292.80	33.30	65.00	65.00	65.00	65.00
			2053	L-877	SECUNDARY	292.80	38.10	65.00	65.00	65.00	65.00
			2053-T	L-187	SECUNDARY	292.80	38.10	65.00	65.00	65.00	65.00
			2121-T	L-547	SECUNDARY	292.80	38.10	65.00	65.00	65.00	65.00
CB/51				L-561	SECUNDARY	292.80	44.50	65.00	65.00	65.00	65.00
FD/74				L-523	PRIMARY	300.40	57.20	66.90	66.90	66.90	66.90
			2039	L-146	PRIMARY	300.80	31.70	66.70	66.70	66.70	66.70
CB/52				L-557	SECUNDARY	305.50	44.50	70.30	70.30	70.30	70.30
			2131	L-544	SECUNDARY	315.90	44.40	70.20	70.20	70.20	70.20
			2137	L-545	SECUNDARY	315.90	57.10	70.20	70.20	70.20	70.20
			2026-AT	L-529	SECUNDARY	318.70	33.30	70.70	70.70	70.70	70.70
			2026-T	L-189	SECUNDARY	318.70	33.30	70.70	70.70	70.70	70.70
			4375	L-587		373.30	82.50	82.80	82.80	82.80	82.80
F/1072						203.90	130.00	41.10	41.10	41.10	41.10
2051-A					PRIMARY	206.30	40.90	29.40	58.50	58.80	29.40
2051-A					SECUNDARY	265.20	40.90	58.50	58.50	58.80	58.80
2012-B					PRIMARY	259.00	28.20	28.70	57.50	57.50	28.70
2012-B					SECUNDARY	259.00	28.20	57.50	57.50	57.50	57.50

10-B

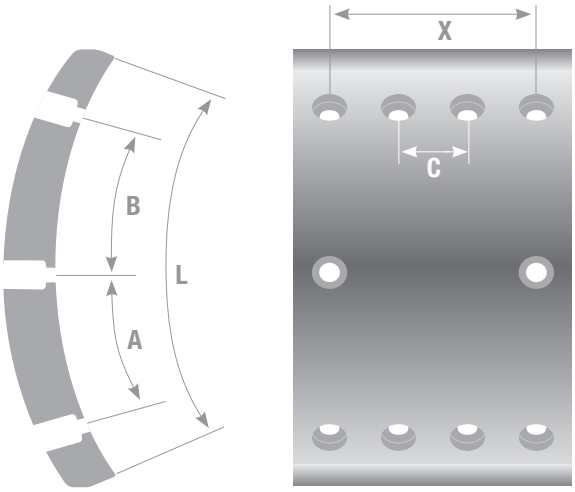

FRAS-LE	BFMC	WVA	FMSI	LonaFlex	PART TYPE	L	X	A	B	C
	RW/9/13/3	19604/605 00		**L-819**	ANC	126.60	149.20	47.00	47.00	69.30
			4692	**L-813**	ANC	135.30	152.40	45.50	45.50	82.50
			4692	**L-813**	CAM	135.30	152.40	45.50	45.50	82.50
			4670	**L-842**	ANC	135.30	165.10	49.40	49.40	82.50
			4670	**L-842**	CAM	135.30	165.10	45.50	45.50	82.50
AC/16					CAM	137.90	163.80	54.80	54.80	95.80
			4649	**L-856**	CAM	139.60	161.90	51.70	51.70	95.30
			4649	**L-856**	ANC	143.40	161.90	51.70	51.70	95.30
AC/16					ANC	143.40	163.80	54.80	54.80	95.80
F/757				**L-748**	ANC	146.10	160.00	52.50	52.50	95.00
F/757				**L-748**	CAM	146.10	160.00	52.50	52.50	95.00
	RW/21/22/1	19908/909 00		**L-818**	ANC	151.50	160.00	49.50	49.50	74.00
	RW/21/22/1	19908/909 00		**L-818**	CAM	151.50	160.00	56.10	56.10	74.00
	RW/9/13/3	19604/605 00		**L-819**	CAM	159.20	149.20	61.30	61.30	69.30

10-C

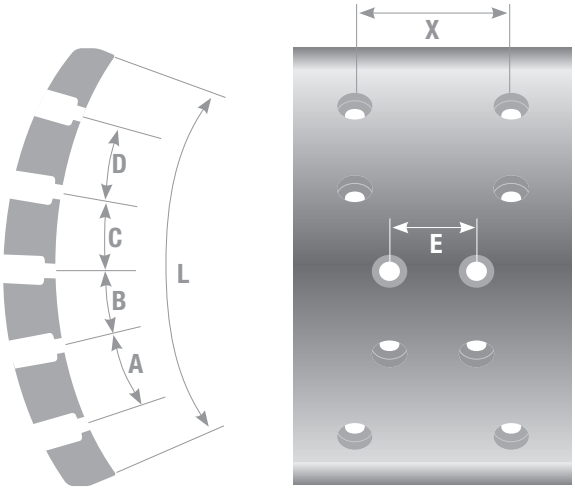

FRAS-LE	BFMC	WVA	FMSI	LonaFlex	PART TYPE	L	X	A	B	C	D	E
	MB/74/75/2	19579/706 00			ANC	217.10	120.00	45.10	45.10	45.10	45.10	92.00
MB/146					ANC	217.10	120.00	45.10	45.10	45.10	45.10	92.00
MB/190	MB/74/75/1	19579/580 00	4656	**L-131**	ANC	217.10	120.00	45.10	45.10	45.10	45.10	92.00
	MB/84/85/1	19632/633 00		**L-1014**	ANC	217.10	140.00	45.10	45.10	45.10	45.10	92.00
	MB/76/77/2	19581/707 00			ANC	217.10	180.00	45.10	45.10	45.10	45.10	92.00
MB/191	MB/76/77/1	19581/582 00	4657	**L-133**	ANC	217.10	180.00	45.10	45.10	45.10	45.10	92.00

10-D

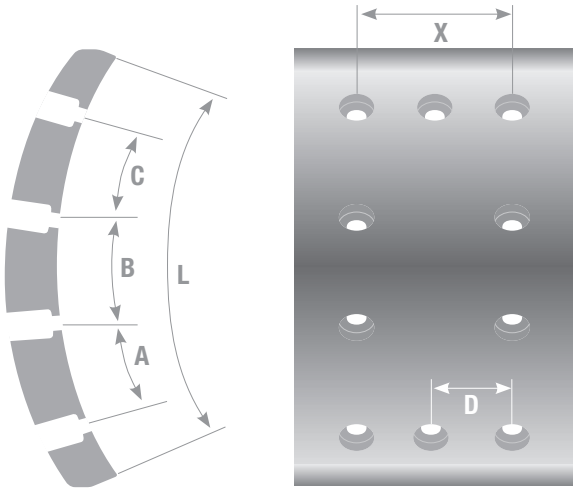

FRAS-LE	BFMC	WVA	FMSI	LonaFlex	PART TYPE	L	X	A	B	C	D
VV/287	VL/74/75/1	19560/561 00	4662	**L-811**	CAM	160.00	112.00	40.00	40.00	40.00	56.00
F/1123						174.60	114.30	43.80	43.80	43.80	57.10
F/1124						174.60	143.70	43.80	43.80	43.80	71.80
VV/288				**L-663**	ANC	192.00	120.00	50.00	50.00	50.00	60.00

10-G

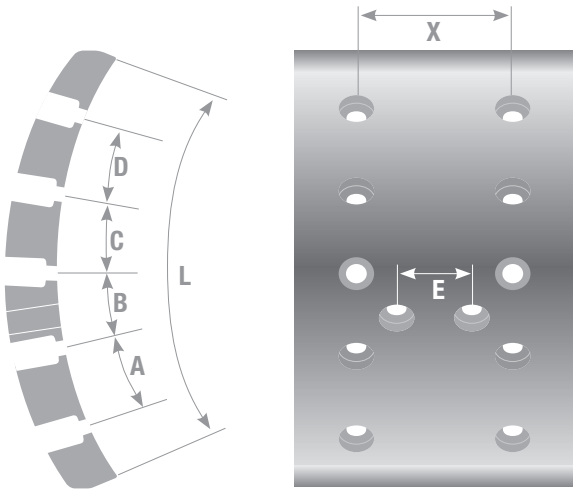

FRAS-LE	BFMC	WVA	FMSI	LonaFlex	PART TYPE	L	X	A	B	C	D	E
	MB/97/1/2	17280/928 00		**L-1018**		259.10	72.00	53.90	53.90	53.90	53.90	48.00
	MB/110/1/2	17280/928 20				259.10	72.00	53.90	53.90	53.90	53.90	48.00

10-K

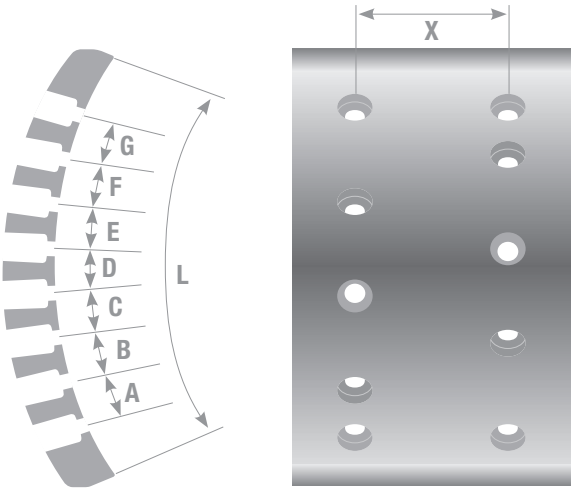

FRAS-LE	BFMC	WVA	FMSI	LonaFlex.	PART TYPE	L	X	A	B	C	D	E	F	G
CB/55				L-145	PRIMARY	179.00	14.00	23.90	23.90	23.90	23.90	23.90	23.90	23.90
CB/49				L-228		186.80	14.00	23.90	23.90	23.90	23.90	23.90	23.90	23.90
OP/24/1	OP/24/1	10125 00		L-1030		190.90	14.00	24.00	24.00	24.00	24.00	24.00	24.00	24.00
CB/55				L-145	SECUNDARY	193.10	14.00	23.90	23.90	23.90	23.90	23.90	23.90	23.90

10-N

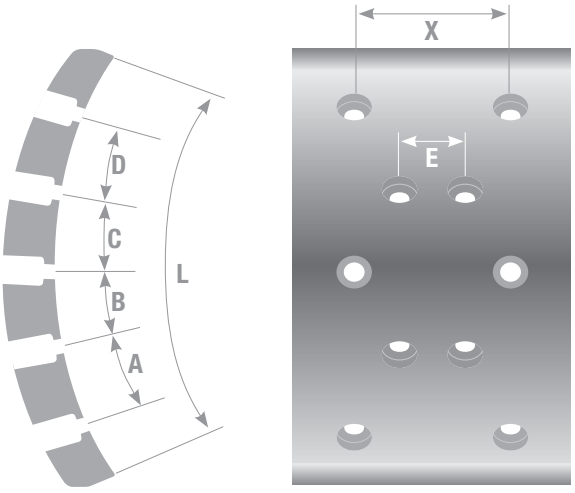

FRAS-LE	BFMC	WVA	FMSI	LonaFlex.	PART TYPE	L	X	A	B	C	D	E
	MB/58/3	19466 00		L-1009		155.50	180.00	28.80	28.80	28.80	28.80	72.00
F/824				L-797	ANC	179.90	116.00	52.70	17.60	44.80	25.50	76.00
F/803		19139 00		L-757		187.10	115.00	38.70	38.70	38.70	38.70	73.00
F/938		19691 00		L-805		190.70	115.50	39.80	39.80	39.80	39.80	74.00
	IZ/28/1		1418	L-767		191.70	104.00	59.20	19.70	59.20	19.70	57.00

10-0

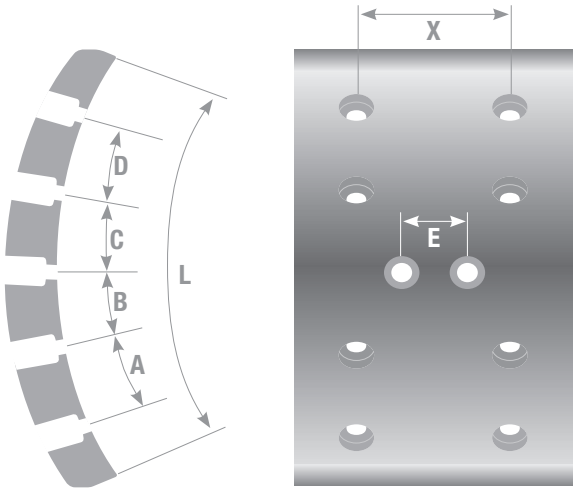

FRAS-LE	BFMC	WVA	FMSI	LonaFlex.	PART TYPE	L	X	A	B	C	D	E
F/781			1471	L-777		190.00	69.00	58.10	23.70	27.70	54.90	43.00
F/783			1422	L-779		190.00	80.00	58.10	23.70	27.70	54.90	35.00

10-P

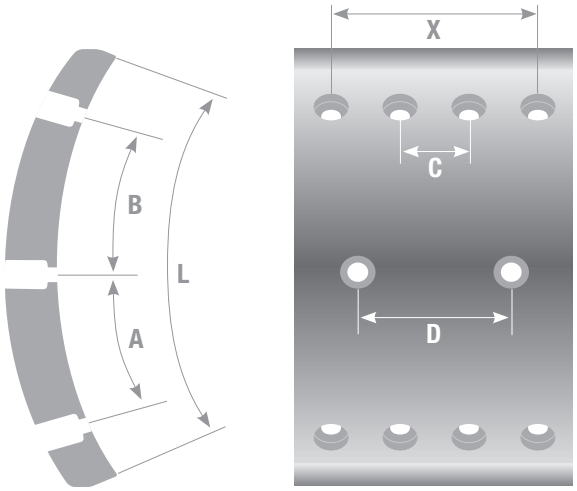

FRAS-LE	BFMC	WVA	FMSI	LonaFlex.	PART TYPE	L	X	A	B	C	D
F/782			1331-A	L-778		190.00	97.00	79.10	72.60	47.00	80.00

10-Q

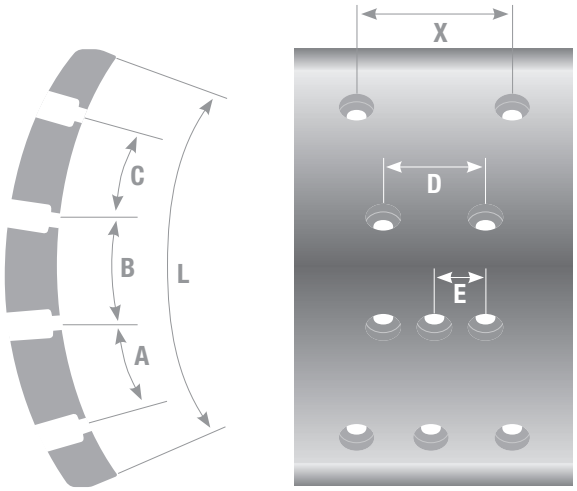

FRAS-LE	BFMC	WVA	FMSI	LonaFlex.	PART TYPE	L	X	A	B	C	D	E
FD/165				L-1059	ANC	144.20	101.00	44.60	27.30	27.30	91.00	45.50

10-R

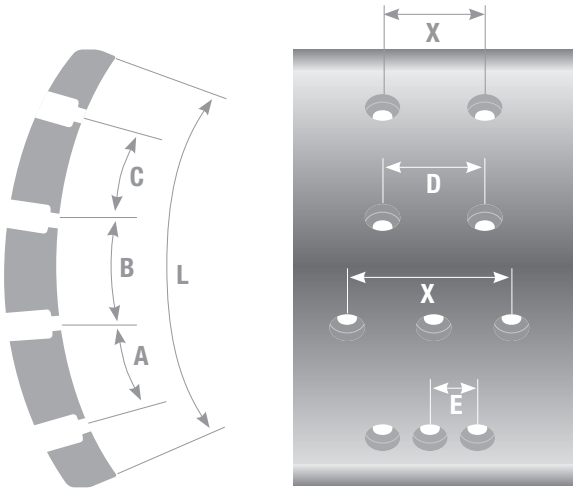

FRAS-LE	BFMC	WVA	FMSI	LonaFlex.	PART TYPE	L	X	A	B	C	D	E
FD/165				L-1059	CAM	143.60	101.00	44.60	27.30	27.30	91.00	45.50

10-S

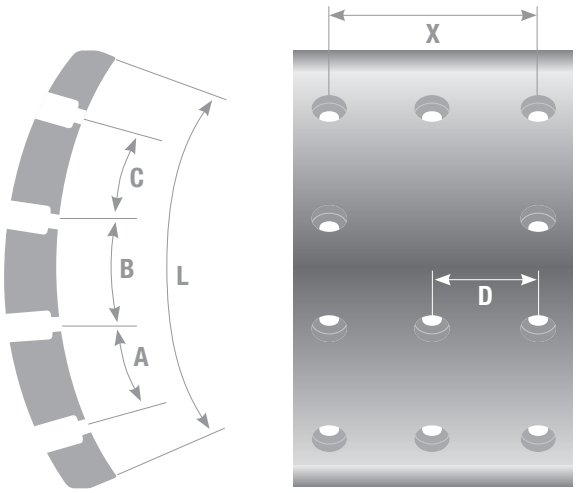

FRAS-LE	BFMC	WVA	FMSI	LonaFlex.	PART TYPE	L	X	A	B	C	D
F/824				L-797	CAM	182.00	116.00	70.30	44.80	25.50	58.00

12-A

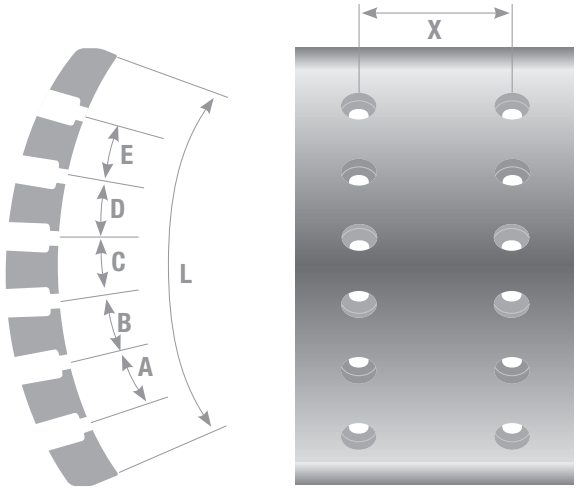

FRAS-LE	BFMC	WVA	FMSI	LonaFlex	PART TYPE	L	X	A	B	C	D	E
FD/87			4704	**L-223**	CAM	171.20	85.70	26.60	26.60	27.40	25.80	22.60
FI/119				**L-226**	CAM	171.20	85.70	26.60	26.60	27.40	25.80	22.60
VV/308			4704	**L-223**	CAM	171.20	85.70	26.60	26.60	27.40	25.80	22.60
FD/87			4704	**L-223**	ANC	177.10	85.70	26.60	26.60	27.40	25.80	22.6
FI/119				**L-226**	ANC	177.10	85.70	26.60	26.60	27.40	25.80	22.60
VV/308			4704	**L-223**	ANC	177.10	85.70	26.60	26.60	27.40	25.80	22.60
			4514-G	**L-136-K**	CAM	189.10	85.70	29.30	29.30	37.20	21.30	24.80
			4715	**L-846**	CAM	189.10	92.10	29.30	29.30	37.20	21.30	24.80
			4715-A		CAM	189.10	104.80	29.30	29.30	40.80	21.30	24.80
			4514-G	**L-136-K**	ANC	194.60	85.70	29.30	29.30	39.00	19.50	24.80
			4715	**L-846**	ANC	194.60	92.10	29.30	29.30	39.00	19.50	24.80
			4715-A		ANC	194.60	104.80	29.30	29.30	39.00	19.50	24.80
			8027	**L-918**		229.20	28.00	41.20	41.20	41.20	41.20	41.20
	OP/18/1	13113 00		**L-1028**		229.20	28.00	41.20	41.20	41.20	41.20	41.20
IV/158	PB/23/26/1	17096/099 00		**L-736**	PRIMARY	236.30	68.00	42.30	42.30	42.30	42.30	42.30
	MB/107/108/1	15869/870 00		**L-997**	PRIMARY	237.00	62.00	41.50	41.50	41.50	41.50	41.50
	MB/100/101/1	17973/974 00		**L-832**	PRIMARY	237.00	72.00	41.50	41.50	41.50	41.50	41.50
MB/193	MB/117/118/2	15869/870 00		**L-586**	PRIMARY	237.00	72.00	41.50	41.50	41.50	41.50	41.50
	MB/69/70/1	15349/350 90		**L-1012**	PRIMARY	244.30	41.00	41.50	41.50	41.50	41.50	41.50
MB/186	MB/72/73/1	15580/581 96	1320	**L-522**	PRIMARY	244.30	70.00	41.50	41.50	41.50	41.50	41.50
MB/187	MB/94/95/1	15580/581 16		**L-522-E**	PRIMARY	244.30	70.00	41.50	41.50	41.50	41.50	41.50
			2011	**L-121**	SECUNDARY	247.70	30.10	43.80	43.80	43.80	43.80	43.80
F/762	SY/20/2/26/1	17635/636 01		**L-1065**	PRIMARY	250.00	80.00	44.50	44.50	44.50	44.50	44.50
FI/92				**L-671**	PRIMARY	252.00	60.00	45.10	45.10	45.10	45.10	45.10
F/761	FI/120/121/1	17924/952 91			PRIMARY	255.20	60.00	44.50	44.50	44.50	44.50	44.50
			2095	**L-630**		255.30	33.30	45.70	45.70	45.70	45.70	45.70
	FD/50/51/1	13057/058 00	8020	**L-917**	SECUNDARY	256.60	20.00	46.20	46.20	46.20	46.20	46.20
RN/210				**L-214**	PRIMARY	256.60	20.00	46.20	46.20	46.20	46.20	46.20
RN/210				**L-214**	SECUNDARY	256.60	20.00	46.20	46.20	46.20	46.20	46.20
	FI/100/101/1	15732/733 00		**L-967**	PRIMARY	257.00	52.00	46.00	46.00	46.00	46.00	46.00
			4470	**L-884**	ANC	275.00	85.70	43.80	43.80	43.80	43.80	43.80
FD/78				**L-658**	PRIMARY	283.30	57.10	35.10	35.10	70.30	70.30	35.10
			4470	**L-884**	CAM	285.50	85.70	46.00	46.00	46.00	46.00	46.00
			2080-T	**L-500**	SECUNDARY	292.80	44.50	32.50	32.50	65.00	65.00	65.00
TY/252				**L-578**		293.10	34.90	53.50	53.50	53.50	53.50	53.50
TY/254				**L-701**		293.10	38.10	53.50	53.50	53.50	53.50	53.50
FI/93				**L-623**	PRIMARY	297.50	76.20	51.40	51.40	51.40	51.40	51.40
			1219	**L-122**	SECUNDARY	298.30	33.30	54.00	54.00	54.00	54.00	54.00
VW/255	MP/37/38/1	15817/823 00		**L-141**	SECUNDARY	301.10	60.00	49.70	49.70	49.70	49.70	49.70
	NN/12/1	15543 00		**L-769**		305.10	50.00	52.40	55.70	55.70	55.70	52.40
			2042	**L-147**	PRIMARY	309.00	44.50	31.00	61.90	61.90	61.90	61.90
			2157-T	**L-923-T**	PRIMARY	309.00	69.80	61.90	61.90	61.90	61.90	30.90
	LE/59/1	17157 05		**L-991**		310.30	88.90	62.10	49.60	49.60	49.60	49.60
	LE/69/1	19662 00		**L-826**		310.30	114.30	62.10	49.60	49.60	49.60	49.60

12-A

FRAS-LE	BFMC	WVA	FMSI	LonaFlex.	PART TYPE	L	X	A	B	C	D	E
F/767			1478	**L-750**		314.20	54.00	54.80	54.80	54.80	54.80	54.80
F/765				**L-749**		314.40	70.00	54.80	54.80	54.80	54.80	54.80
F/763			1482	**L-402**		318.10	60.00	55.00	55.00	55.00	55.00	55.00
F/766			1467	**L-404**		329.00	40.00	57.90	57.90	57.90	57.90	57.90
			2060	**L-202**	PRIMARY	333.80	44.40	33.40	66.90	66.90	66.90	66.90
			2042	**L-147**	SECUNDARY	340.00	44.50	61.90	61.90	61.90	61.90	61.90
FD/71				**L-535**	SECUNDARY	340.00	57.20	61.90	61.90	61.90	61.90	61.90
FD/73				**L-534**	SECUNDARY	340.00	57.20	61.90	61.90	61.90	61.90	61.90
FD/72				**L-577**	SECUNDARY	340.00	63.50	61.90	61.90	61.90	61.90	61.90
			2060	**L-202**	SECUNDARY	367.20	44.40	66.90	66.90	66.90	66.90	66.90
FD/74				**L-523**	SECUNDARY	367.20	57.10	66.90	66.90	66.90	66.90	66.90
			2039	**L-146**	SECUNDARY	367.60	31.70	66.70	66.70	66.70	66.70	66.70
	GG/83/1	19072 00		**L-981**		374.40	120.60	66.60	66.60	66.60	66.60	66.60
	GG/83/2			**L-982**		374.40	120.60	66.60	66.60	66.60	66.60	66.60
			4596-B	**L-560-B**		375.00	98.40	68.20	68.20	68.20	68.20	68.20
			4562	**L-889**		394.10	66.70	72.50	72.50	72.50	72.50	72.50
			2157		PRIMARY	309.00	69.85	61.90	61.90	61.90	61.90	55.70

12-B

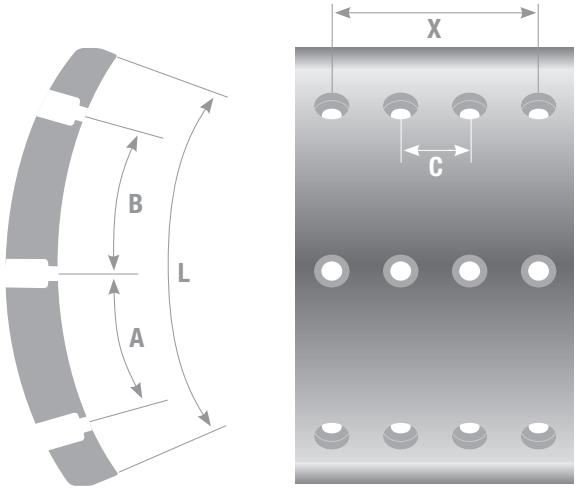

FRAS-LE	BFMC	WVA	FMSI	LonaFlex.	PART TYPE	L	X	A	B	C
			4591	**L-568**	ANC	130.90	165.10	45.60	45.60	82.50
			4591	**L-568**	CAM	130.90	165.10	49.50	49.50	82.50
F/784			1419	**L-780**		190.00	116.00	79.10	72.60	56.00
SV/223	SV/8/1	19075 00		**L-107**		192.60	146.00	78.30	78.30	60.00
SV/226	SV/27/1	19393 00		**L-497**		192.60	171.00	78.30	78.30	60.00
SV/227	SV/34/1	19647 00		**L-499**		192.60	216.00	78.30	78.30	72.00
F/1156				**L-1068**		143.00	110.00	54.90	54.03	50.00

12-C

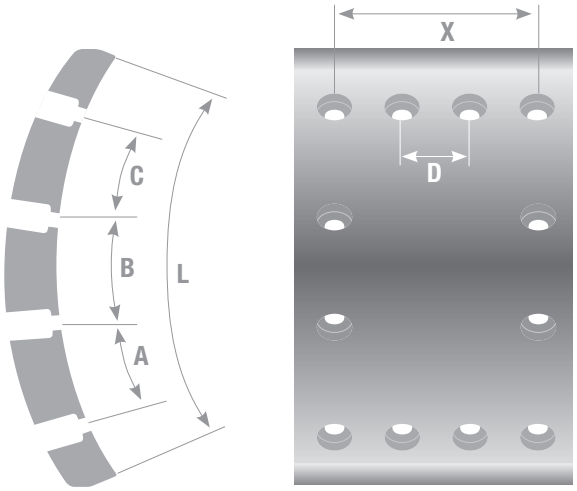

FRAS-LE	BFMC	WVA	FMSI	LonaFlex	PART TYPE	L	X	A	B	C	D
			4505-A	**L-727**		163.50	139.70	48.10	48.10	35.30	57.10
	BC/120/121/1	19718/719 00			ANC	169.00	161.90	36.40	51.60	36.40	82.50
	BC/120/121/1	19718/719 00			CAM	169.00	161.90	36.40	51.60	36.40	82.50
	DF/46/47/1	19052/055 00		**L-837**	CAM	175.60	130.00	46.10	46.10	46.10	80.00
	GG/218/1	19177 00		**L-848**		175.80	129.00	32.80	53.60	53.60	57.00
	DF/36/37/1	19888/889 00		**L-961**	CAM	177.40	130.00	46.10	46.10	46.10	80.00
	DF/46/47/1	19052/055 00		**L-837**	ANC	179.20	130.00	46.10	46.10	46.10	80.00
	DF/36/37/1	19888/889 00		**L-961**	ANC	180.90	130.00	46.10	46.10	46.10	80.00
VW/256				**L-540**		185.60	69.80	36.40	56.50	56.50	38.10
VW/257				**L-541**		185.60	92.20	36.40	56.50	56.50	63.50
			4515-F	**L-157-N**	CAM	189.10	136.50	58.50	58.50	24.80	69.90
			4701	**L-908**	CAM	189.10	136.50	58.50	58.50	24.80	69.90
AC/30					CAM	189.10	136.50	58.50	58.50	24.80	69.90
	FT/15/16/1	19790/791 00		**L-971**	CAM	189.10	136.50	58.50	58.50	24.80	69.90
	IL/66/67/1		4515	**L-157**	CAM	189.10	136.50	58.50	58.50	24.80	69.90
	IL/66/67/3	19036/037 00	4515-C	**L-157-A**	CAM	189.10	136.50	58.50	58.50	24.80	69.90
	IL/66/67/5	19840/841 00		**L-986**	CAM	189.10	136.50	58.50	58.50	24.80	69.90
	IL/66/67/8			**L-987**	CAM	189.10	136.50	58.50	58.50	24.80	69.90
	CW/4/1	19384 00	4602	**L-857**		189.10	139.70	64.10	64.10	28.80	57.40
	CW/4/1/2	19384/385 00				189.10	139.70	64.10	64.10	28.80	57.40
	RW/1/2/1			**L-1035**	CAM	189.10	161.90	58.50	58.50	24.80	82.60
	RW/1/2/3	19365/366 00		**L-1036**	CAM	189.10	161.90	58.50	58.50	24.80	82.60
	FU/4/5/1		4551	**L-696**	CAM	189.10	177.80	58.50	58.50	24.80	98.40
	FU/4/5/3	19369/370 00	4551-Z	**L-696-Z**	CAM	189.10	177.80	58.50	58.50	24.80	98.40
	FU/4/5/4	19842/843 00		**L-973**	CAM	189.10	177.80	58.50	58.50	24.80	98.40
	RW/34/35/1	19030/033 00		**L-1037**	CAM	189.70	143.90	58.50	58.50	24.80	85.70
			4515-F	**L-157-N**	ANC	194.60	136.50	58.50	58.50	24.80	69.90
			4701	**L-908**	ANC	194.60	136.50	58.50	58.50	24.80	69.90
AC/30					ANC	194.60	136.50	58.50	58.50	24.80	69.90
	FT/15/16/1	19790/791 00		**L-971**	ANC	194.60	136.50	58.50	58.50	24.80	69.90
	IL/66/67/1		4515	**L-157**	ANC	194.60	136.50	58.50	58.50	24.80	69.90
	IL/66/67/3	19036/037 00	4515-C	**L-157-A**	ANC	194.60	136.50	58.50	58.50	24.80	69.90
	IL/66/67/5	19840/841		**L-986**	ANC	194.60	136.50	58.50	58.50	24.80	69.90
	IL/66/67/8			**L-987**	ANC	194.60	136.50	58.50	58.50	24.80	69.90
	RW/1/2/1			**L-1035**	ANC	194.60	161.90	58.50	58.50	24.80	82.60
	RW/1/2/3	19365/366 00		**L-1036**	ANC	194.60	161.90	58.50	58.50	24.80	82.60
	FU/4/5/1		4551	**L-696**	ANC	194.60	177.80	58.50	58.50	24.80	98.40
	FU/4/5/3	19369/370 00	4551-Z	**L-696-Z**	ANC	194.60	177.80	58.50	58.50	24.80	98.40
	FU/4/5/4	19842/843		**L-973**	ANC	194.60	177.80	58.50	58.50	24.80	98.40
		19840/841 00			ANC	195.10	136.50	58.50	58.50	24.80	69.90
	RW/34/35/1	19030/033 00		**L-1037**	ANC	195.10	143.90	58.50	58.50	24.80	85.70

12-D

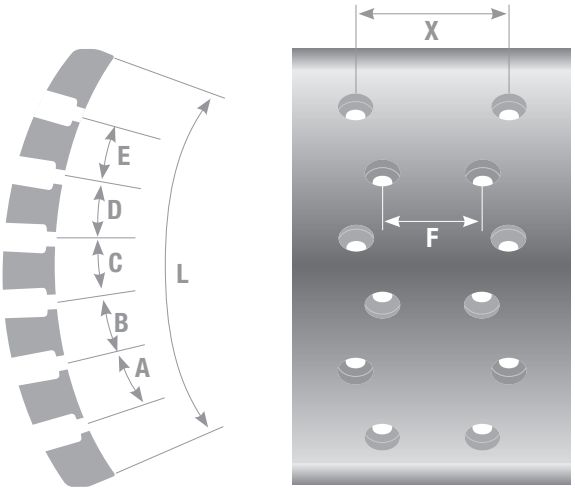

FRAS-LE	BFMC	WVA	FMSI	LonaFlex	PART TYPE	L	X	A	B	C	D	E	F
			4622	**L-589**		262.50	133.30	20.50	71.80	20.50	71.80	20.50	57.10

12-E

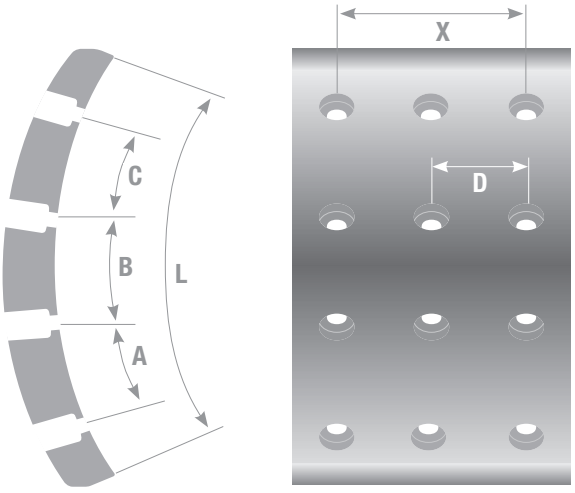

FRAS-LE	BFMC	WVA	FMSI	LonaFlex	PART TYPE	L	X	A	B	C	D
VV/297	VL/86/1	19941 00		**L-713**		177.10	114.00	47.10	45.40	45.40	57.00
VV/298	VL/87/1	19938 00		**L-710**		177.10	140.00	47.10	45.40	45.40	70.00
VV/299	VL/88/1	19939 00		**L-711**		177.10	164.00	47.10	45.40	45.40	82.00
VV/300	VL/89/1	19940 00		**L-712**		177.10	189.00	47.10	45.40	45.40	94.50
VV/250	VL/72/73/1	19467/468 00	4663	**L-706**	ANC	192.00	138.00	50.00	50.00	50.00	69.00
VV/289	VL/76/77/1	19562/563 00	4664	**L-664**	ANC	192.00	160.00	50.00	50.00	50.00	80.00
VV/309	VL/83/84/1	19885/886 00		**L-1049**	ANC	192.00	190.00	50.00	50.00	50.00	95.00
VV/290	VL/81/82/1	19799/800 00	4698	**L-665**	ANC	192.00	204.00	50.00	50.00	50.00	102.00
	PB/18/19/1	19847/848 00		**L-1032**	ANC	196.00	160.00	52.50	52.50	52.50	80.00

12-F

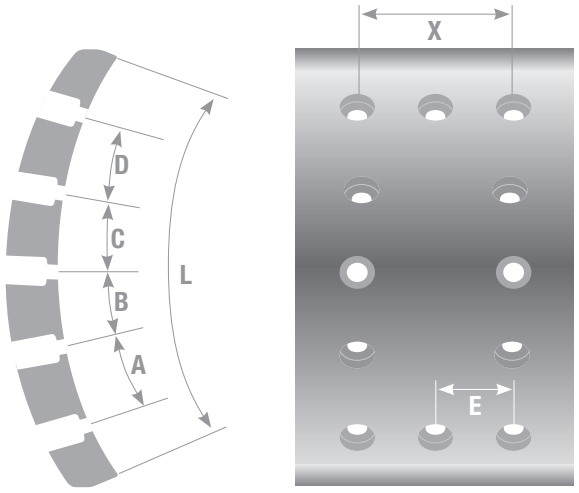

FRAS-LE	BFMC	WVA	FMSI	LonaFlex	PART TYPE	L	X	A	B	C	D	E
VV/287	VL/74/75/1	19560/561 00	4662	**L-811**	ANC	200.00	112.00	40.00	40.00	40.00	40.00	56.00

12-G

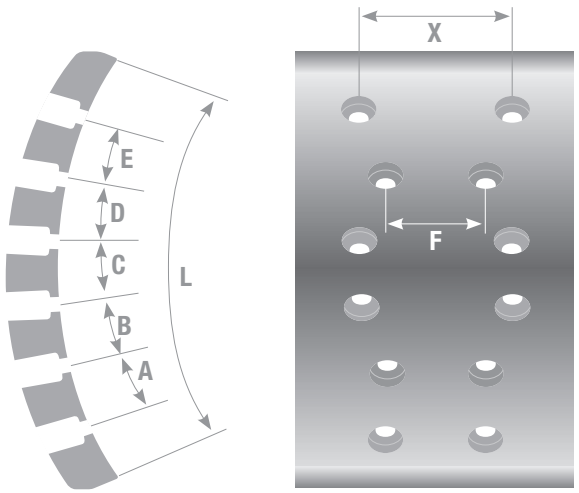

FRAS-LE	BFMC	WVA	FMSI	LonaFlex	PART TYPE	L	X	A	B	C	D	E	F
F/725				**L-744**		194.00	95.00	19.90	29.80	49.70	29.80	19.90	86.00
F/940				**L-807**		194.00	102.50	18.20	34.80	53.00	14.90	38.10	60.00
F/935				**L-802**		194.00	112.00	18.20	34.80	53.00	15.70	37.30	86.00
F/1096		19128 00		**L-1069**		194.00	112.00	18.00	34.40	52.40	16.40	36.00	60.00
	NN/61/1	19683 00	4736	**L-768**		194.00	148.00	18.00	34.40	54.00	32.80	19.70	60.00
F/724	NN/63/1			**L-743**		194.00	160.00	18.20	34.30	53.70	32.70	19.80	87.00
F/936		19132 00		**L-803**		194.00	160.00	18.20	34.80	53.00	34.80	18.20	61.00
	NN/52/1	19623 00	1335	**L-791**		196.20	130.00	20.00	33.20	54.90	34.90	18.30	60.00
F/924				**L-799**		197.10	158.50	18.20	34.80	53.00	24.80	28.20	86.00
F/927				**L-809**		197.30	112.30	16.60	29.80	53.00	14.90	38.10	86.00

12-H

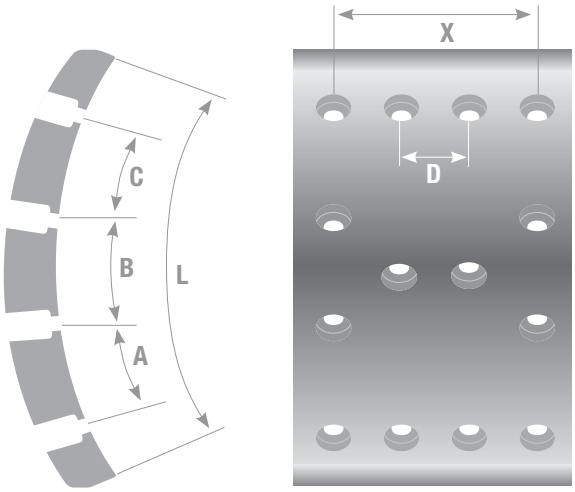

FRAS-LE	BFMC	WVA	FMSI	LonaFlex.	PART TYPE	L	X	A	B	C	D
	CW/4/1/2	19384/385 00				189.10	139.70	64.10	64.10	28.80	57.40
	CW/4/2	19385 00		**L-954**		189.10	139.70	64.10	64.10	28.80	57.40

12-I

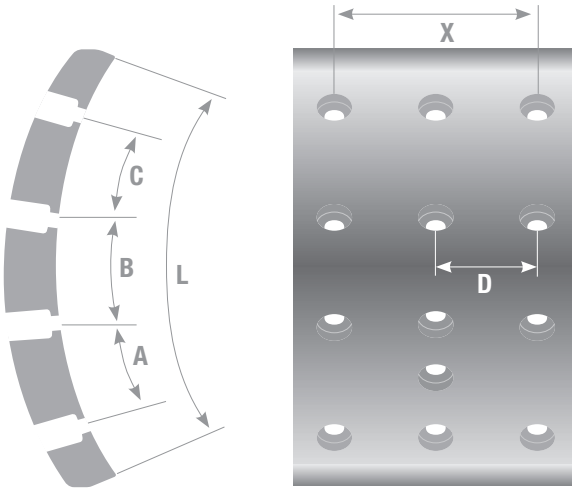

FRAS-LE	WVA	BFMC	FMSI	LonaFlex.	PART TYPE	L	X	A	B	C	D
	19847/848 00	PB/18/19/1		**L-1032**	CAM	196.00	160.00	52.50	52.50	52.50	80.00

12-J

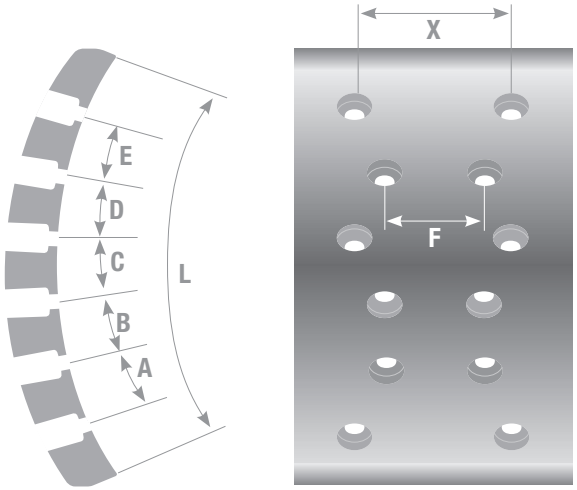

FRAS-LE	BFMC	WVA	FMSI	LonaFlex.	PART TYPE	L	X	A	B	C	D	E	F
F/819				**L-794**		186.70	119.00	19.50	38.90	19.50	58.40	19.50	72.00
F/951						187.80	118.50	20.50	38.00	18.90	58.00	18.90	71.50

12-K

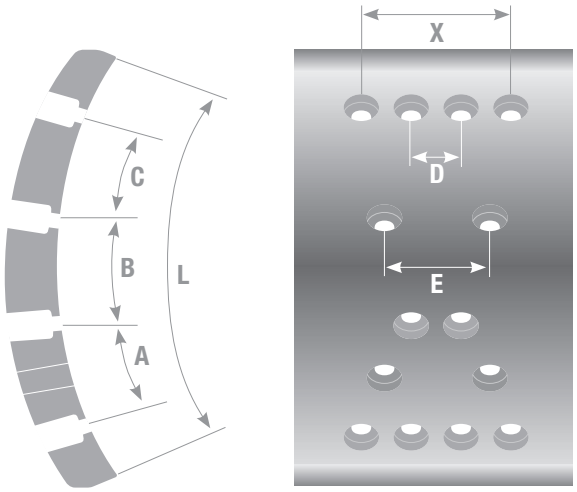

FRAS-LE	BFMC	WVA	FMSI	LonaFlex.	PART TYPE	L	X	A	B	C	D	E
IV/161	RW/28/1/2	19555/556 00		L-1063	CAM	196.40	148.00	49.20	49.20	49.20	60.00	104.00
	RW/28/30/31/1	19714 00			CAM	196.40	148.00	49.20	49.20	49.20	60.00	104.00
IV/159	RW/29/1/2	19553/554 00		L-1062	CAM	196.40	160.00	49.20	49.20	49.20	60.00	110.00
IV/160	RW/29/32/33/1	19716 00		**L-988**	CAM	196.40	160.00	49.20	49.20	49.20	60.00	110.00
IV/164	RW/38/39/1	19116/119 00		L-1052	CAM	196.40	160.00	49.20	49.20	49.20	60.00	110.00
	RW/37/36/1	19109/110			CAM	195.50	148.00	49.20	49.20	49.20	60.00	104.00

12-L

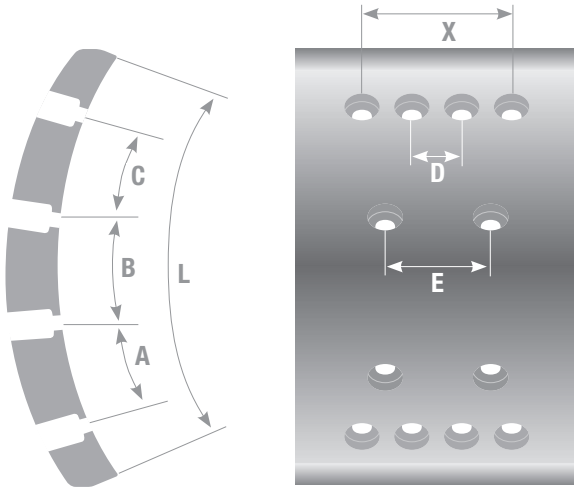

FRAS-LE	BFMC	WVA	FMSI	LonaFlex.	PART TYPE	L	X	A	B	C	D	E
IV/161	RW/28/1/2	19555/556 00		L-1063	ANC	196.40	148.00	49.20	49.20	49.20	60.00	104.00
	RW/28/30/31/1	19714 00			ANC/CAM	196.40	148.00	49.20	49.20	49.20	60.00	104.00
IV/159	RW/29/1/2	19553/554 00		L-1062	ANC	196.40	160.00	49.20	49.20	49.20	60.00	110.00
IV/160	RW/29/32/33/1	19716 00		**L-988**	ANC/CAM	196.40	160.00	49.20	49.20	49.20	60.00	110.00
IV/164	RW/38/39/1	19116/119 00		L-1052	ANC	196.40	160.00	49.20	49.20	49.20	60.00	110.00
	RW/36/37/1	19109/110 00			ANC	195.50	148.00	49.20	49.20	29.20	60.00	104.00

12-M

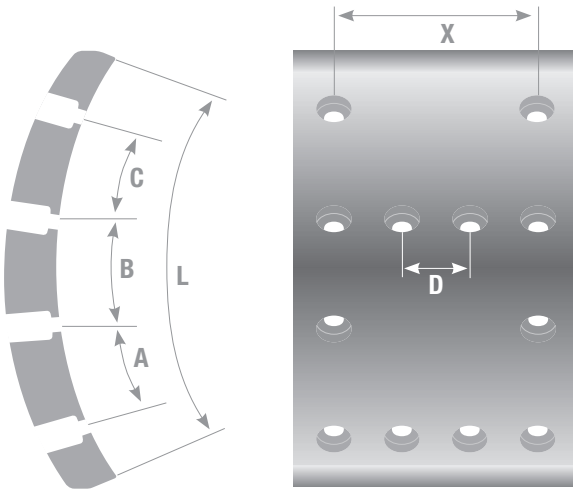

FRAS-LE	WVA	BFMC	FMSI	LonaFlex.	PART TYPE	L	X	A	B	C	D
F/957						184.00	140.00	51.10	51.10	51.10	60.00

12-N

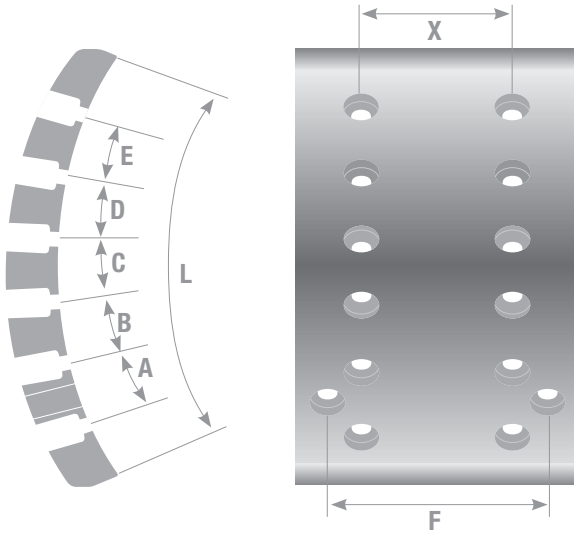

FRAS-LE	BFMC	WVA	FMSI	LonaFlex.	PART TYPE	L	X	A	B	C	D	E	F
			4514-G WH		CAM	189.10	85.70	29.30	29.30	37.20	21.30	24.80	120.60

13-C

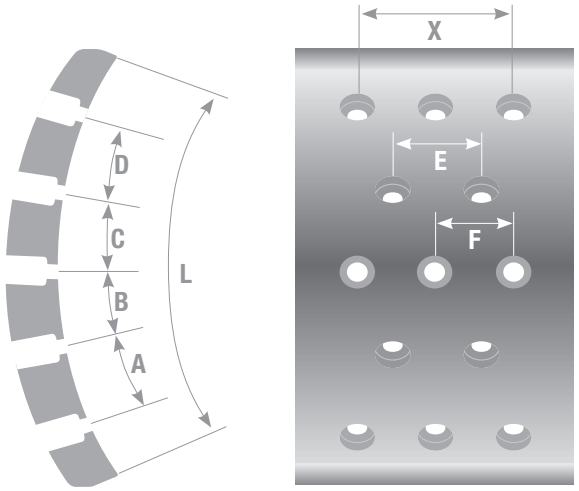

FRAS-LE	BFMC	WVA	FMSI	LonaFlex.	PART TYPE	L	X	A	B	C	D	E	F
F/820					ANC	179.90	166.00	52.70	17.60	44.80	25.50	110.00	55.00

14-A

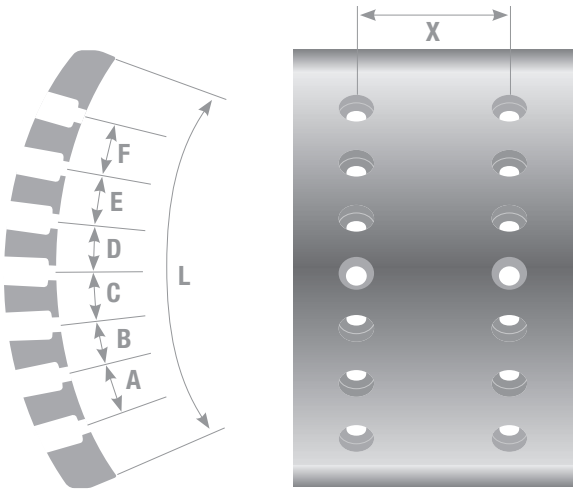

FRAS-LE	BFMC	WVA	FMSI	LonaFlex	PART TYPE	L	X	A	B	C	D	E	F
CB/47				**L-653**		222.70	25.00	33.10	33.10	24.80	36.40	36.40	36.40
	MB/107/108/1	15869/870 00		**L-997**	SECUNDARY	263.90	62.00	41.50	41.50	41.50	41.50	41.50	26.90
	MB/100/101/1	17973/974 00		**L-832**	SECUNDARY	263.90	72.00	41.50	41.50	41.50	41.50	41.50	26.90
F/768	LH/103/04/1	17945/946 00		**L-751**	PRIMARY	285.40	70.00	42.50	42.50	42.50	42.50	42.50	42.50
	MB/69/70/1	15349/350 90		**L-1012**	SECUNDARY	285.90	41.00	41.50	41.50	41.50	41.50	41.50	41.50
MB/186	MB/72/73/1	15580/581 96	1320	**L-522**	SECUNDARY	285.90	70.00	41.50	41.50	41.50	41.50	41.50	41.50
MB/187	MB/94/95/1	15580/581 16		**L-522-E**	SECUNDARY	285.90	70.00	41.50	41.50	41.50	41.50	41.50	41.50
F/756				**L-401**		287.70	74.50	44.10	44.10	38.90	38.90	44.10	44.10
F/762	SY/20/2/26/1	17635/636 01		**L-1065**	SECUNDARY	289.30	80.00	44.50	44.50	44.50	44.50	44.50	39.90
F/761	FI/120/121/1	17924/925 91			SECUNDARY	291.90	80.00	44.50	44.50	44.50	44.50	44.50	39.30
			2006	**L-518**	SECUNDARY	292.80	33.30	32.50	32.50	65.00	65.00	32.50	32.50
			2006-T	**L-387**	SECUNDARY	292.80	33.30	32.50	32.50	65.00	65.00	32.50	32.50
MB/157				**L-115**	SECUNDARY	292.80	44.50	33.70	33.70	67.50	67.50	33.70	33.70
FI/92				**L-671**	SECUNDARY	295.70	60.00	45.10	45.10	45.10	45.10	45.10	45.10
	FI/100/101/1	15732/733 00		**L-967**	SECUNDARY	297.70	52.00	46.00	46.00	46.00	46.00	46.00	46.00
F/755				**L-400**		298.10	66.50	49.20	44.10	38.90	38.90	44.10	49.20
			2157-T		SECUNDARY	309.00	69.80	61.90	61.90	61.90	61.90	61.90	61.90
			1458	**L-774**		311.80	70.00	45.20	45.20	45.20	45.20	45.20	45.20
FD/78				**L-658**	SECUNDARY	316.30	57.10	35.10	35.10	70.30	70.30	35.10	35.10
			2042-A		SECUNDARY	340.00	44.50	61.90	61.90	61.90	61.90	61.90	61.90
FI/93				**L-623**	SECUNDARY	340.70	76.20	51.40	51.40	51.40	51.40	51.40	48.70
MB/155	MB/20/1	15090 00		**L-114**		344.80	34.00	57.50	57.50	57.50	57.50	57.50	57.50
			4639			368.50	95.20	54.20	54.20	54.20	54.20	54.20	54.20
			2032			368.70	69.80	55.10	55.10	55.10	55.10	55.10	55.10
FD/82				**L-655**		374.70	69.80	56.20	56.20	56.20	56.20	56.20	56.20
			4564-A			374.80	82.50	56.30	56.30	56.30	56.30	56.30	56.30
CB/36				**L-361**		375.00	82.50	55.10	55.10	55.10	55.10	55.10	55.10
			1252	**L-722**		375.00	82.60	58.40	58.40	58.40	58.40	58.40	58.40
			4596			375.00	98.40	58.40	58.40	58.40	58.40	58.40	58.40
			4597			375.00	128.60	58.40	58.40	58.40	58.40	58.40	58.40
			1294	**L-872**		376.20	41.30	58.70	58.70	58.70	58.70	58.70	58.70
FD/75				**L-524**		377.00	95.20	56.30	56.30	56.30	56.30	56.30	56.30
			1443-TT	**L-829**		393.00	50.80	60.10	60.10	66.30	53.90	60.10	60.10
			1307	**L-766**		393.70	57.10	60.40	60.40	60.40	60.40	60.40	60.40
			1308-A	**L-105-A**		393.70	66.70	58.60	58.60	58.60	58.60	58.60	58.60
			1308	**L-105**		393.70	69.80	60.40	60.40	60.40	60.40	60.40	60.40
			1308-TT	**L-105-TT**		393.70	69.80	60.40	60.40	60.40	60.40	60.40	60.40
			1245-A	**L-662**		404.30	54.00	63.10	63.10	63.10	63.10	63.10	63.10
			1280	**L-870**		404.30	54.00	63.10	63.10	63.10	63.10	63.10	63.10
			4561			408.90	57.10	61.30	61.30	61.30	61.30	61.30	61.30
			4561-B			408.90	57.10	61.30	61.30	61.30	61.30	61.30	61.30
FD/76				**L-488**		408.90	57.10	61.30	61.30	61.30	61.30	61.30	61.30
			659-B	**L-510**		409.00	38.10	61.30	61.30	61.30	61.30	61.30	61.30
			1276	**L-869**		409.00	38.10	61.30	61.30	61.30	61.30	61.30	61.30
			2157		SECUNDARY	335.80	69.85	61.90	61.90	61.90	61.90	55.70	26.90

14-B

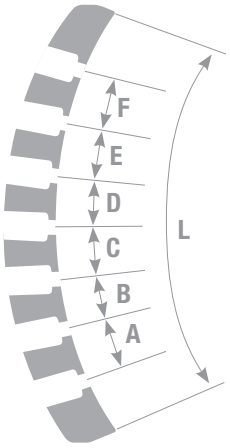

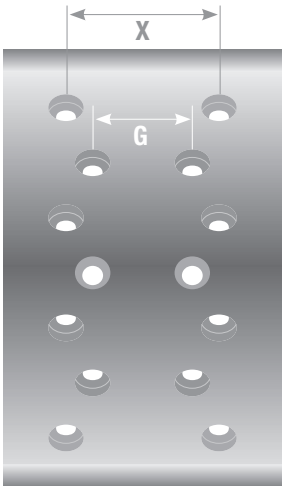

FRAS-LE	BFMC	WVA	FMSI	LonaFlex.	PART TYPE	L	X	A	B	C	D	E	F	G
F/787	CB/31/1 F			**L-781**		191.70	115.00	19.70	39.40	19.70	19.70	39.40	19.70	60.00
			4462	**L-833-B**	ANC	274.90	136.60	37.20	35.00	32.80	41.60	35.00	37.20	69.80
			4462-A	**L-883-B**	ANC	274.90	136.60	37.20	35.00	32.80	41.60	35.00	37.20	69.80
			4462	**L-833-B**	CAM	285.40	136.60	41.60	39.40	52.50	28.40	41.60	24.10	69.80
			4462-A	**L-883-B**	CAM	285.40	136.60	41.60	39.40	52.50	28.40	41.60	24.10	69.80
			4480	**L-885**	ANC	299.40	136.60	40.50	38.10	35.70	45.30	38.10	40.50	69.80
			4480	**L-885**	CAM	328.00	136.60	45.30	43.00	57.20	31.00	45.30	26.20	69.80

14-C

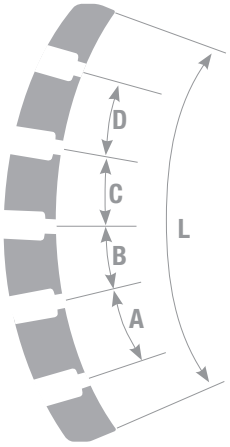

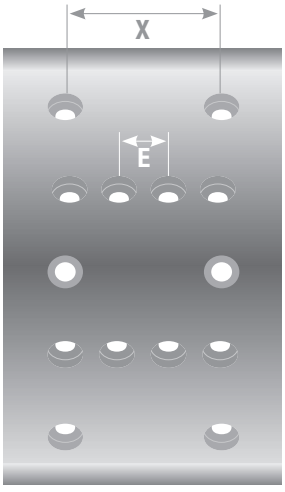

FRAS-LE	BFMC	WVA	FMSI	LonaFlex.	PART TYPE	L	X	A	B	C	D	E
F/969						188.00	118.00	39.60	39.60	39.60	39.60	60.00
	AX/14/6	19896 00	4311-J			196.20	139.70	36.60	36.60	36.60	36.60	88.90

14-D

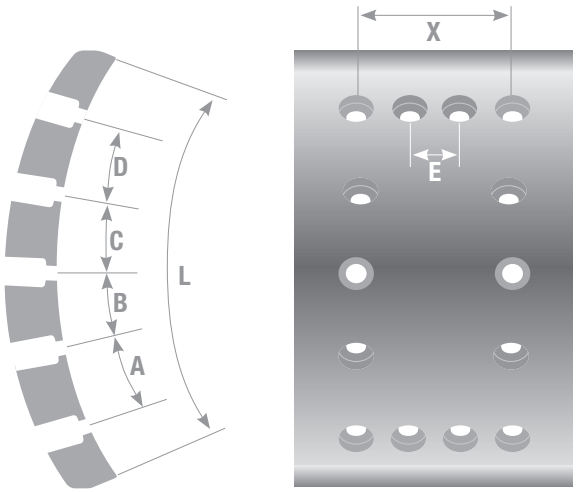

FRAS-LE	BFMC	WVA	FMSI	LonaFlex.	PART TYPE	L	X	A	B	C	D	E
	DF/16/17/1			**L-955**	ANC	212.40	130.00	46.10	46.10	46.10	46.10	80.00
	DF/16/17/2	19256/260 00		**L-956**	ANC	212.40	130.00	46.10	46.10	46.10	46.10	80.00
	DF/16/17/1			**L-955**	CAM	217.50	130.00	46.10	46.10	46.10	46.10	80.00
	DF/16/17/2	19256/260 00		**L-956**	CAM	217.50	130.00	46.10	46.10	46.10	46.10	80.00

14-E

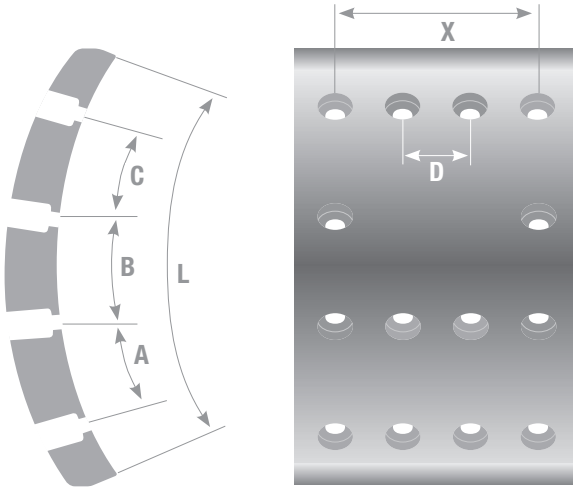

FRAS-LE	BFMC	WVA	FMSI	LonaFlex.	PART TYPE	L	X	A	B	C	D
FD/88			4705	**L-224**	CAM	171.20	136.50	53.20	53.20	22.60	79.40
VV/306			4705	**L-224**	CAM	171.20	136.50	53.20	53.20	22.60	79.40
FD/88			4705	**L-224**	ANC	177.10	136.50	53.20	53.20	22.60	79.40
VV/306			4705	**L-224**	ANC	177.10	136.50	53.20	53.20	22.60	79.40
MP/410				**L-410**	CAM	184.90	142.80	57.20	57.20	24.30	91.80
MP/411				**L-411**	CAM	184.90	178.80	57.20	57.20	24.30	107.80
			4515-G	**L-157-O**	CAM	189.10	136.50	58.50	58.50	24.80	69.80
			4707	**L-641**	CAM	189.10	142.90	58.50	58.50	24.80	85.70
F/815					CAM	189.10	142.90	58.50	58.50	24.80	85.70
			4711	**L-643**	CAM	189.10	168.30	58.50	58.50	58.50	85.70
			4718	**L-639**	CAM	189.10	168.30	58.50	58.50	58.50	85.70
ST/352				**L-352**	CAM	189.10	168.30	58.50	58.50	58.50	85.70
			4551-E	**L-696-E**	CAM	189.10	177.80	58.50	58.50	24.80	98.40
MP/410				**L-410**	ANC	190.40	142.80	57.20	40.90	40.60	91.80
MP/411				**L-411**	ANC	190.40	178.80	57.20	40.90	40.60	107.80
			4515-G	**L-157-O**	ANC	194.60	136.50	58.50	58.50	24.80	69.80
			4707	**L-641**	ANC	194.60	142.90	58.50	58.50	24.80	85.70
F/815					ANC	194.60	142.90	58.50	58.50	24.80	85.70
			4711	**L-643**	ANC	194.60	168.30	58.50	41.70	41.70	85.70
			4718	**L-639**	ANC	194.60	168.30	58.50	41.70	41.70	85.70
ST/352				**L-352**	ANC	194.60	168.30	58.50	41.70	41.70	85.70
			4551-E	**L-696-E**	ANC	194.60	177.80	58.50	58.50	24.80	98.40

14-F

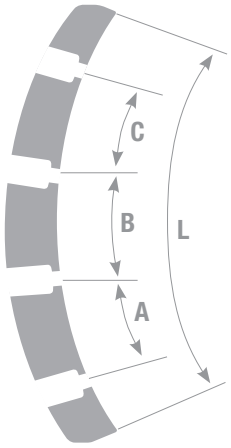

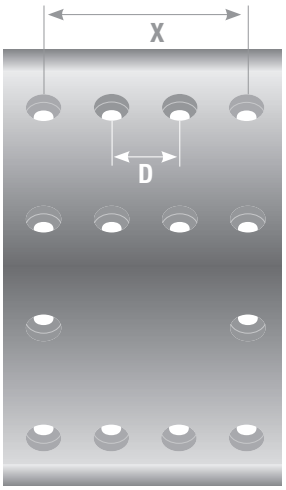

FRAS-LE	BFMC	WVA	FMSI	LonaFlex.	PART TYPE	L	X	A	B	C	D
AC/11			4717	L-912		176.80	181.00	40.20	49.80	40.10	88.90
			4708	L-910	ANC	195.60	139.70	49.80	44.40	49.80	88.90
			4708	L-910	CAM	195.60	139.70	49.80	49.80	44.40	88.90
			4709	L-812		196.10	139.70	44.60	55.30	44.60	88.90

14-G

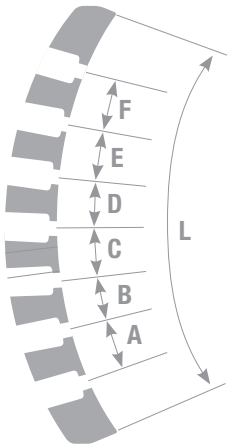

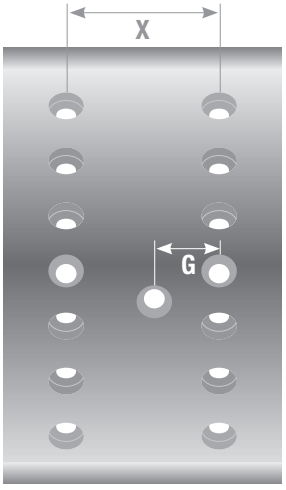

FRAS-LE	BFMC	WVA	FMSI	LonaFlex.	PART TYPE	L	X	A	B	C	D	E	F	G
			1245-C	L-662-C		404.30	54.00	63.10	63.10	63.10	63.10	63.10	63.10	27.00
			1280-B	L-870-B		404.30	54.00	63.10	63.10	63.10	63.10	63.10	63.10	27.00

14-H

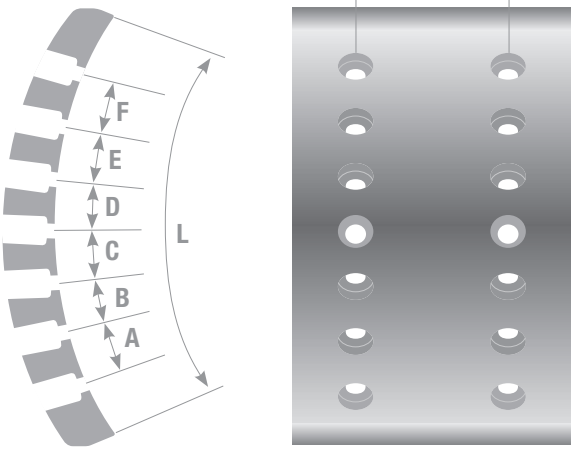

FRAS-LE	BFMC	WVA	FMSI	LonaFlex.	PART TYPE	L	X	A	B	C	D	E	F
MB/193	MB/117/118/2	17351/975 04		**L-586**	SECUNDARY	263.90	72.00	41.50	41.50	41.50	41.50	41.50	26.90
IV/158	PB/23/26/1	17096/099 00		**L-736**	SECUNDARY	273.60	68.00	42.30	42.30	42.30	42.30	42.30	37.30

14-I

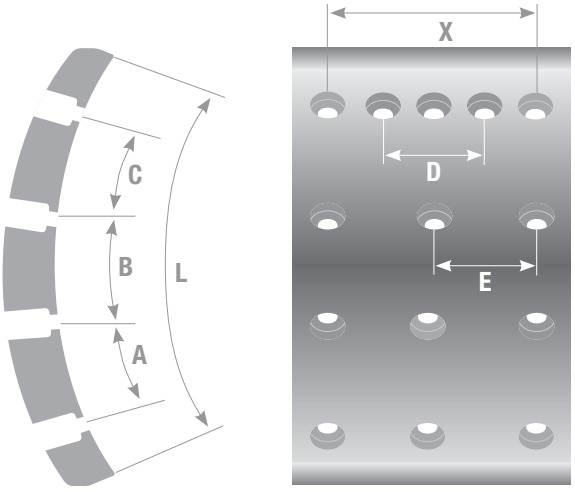

FRAS-LE	BFMC	WVA	FMSI	LonaFlex.	PART TYPE	L	X	A	B	C	D	E
VV/303	VL/87/2	19090 00		**L-733**		177.10	140.00	47.10	45.40	45.40	80.40	70.00
VV/304	VL/88/2	19071 00		**L-734**		177.10	164.00	47.10	45.40	45.40	80.40	82.00
VV/305	VL/89/2	19068 00		**L-735**		177.10	189.00	47.10	45.40	45.40	80.40	94.50

14-K

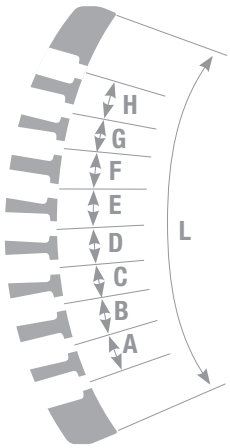

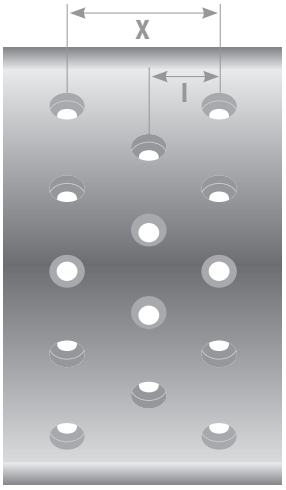

FRAS-LE	BFMC	WVA	FMSI	LonaFlex.	PART TYPE	L	X	A	B	C	D	E	F	G	H	I
F/837			4738	L-788		191.30	160.00	19.80	19.80	19.80	19.80	19.80	19.80	19.80	19.80	80.00

14-M

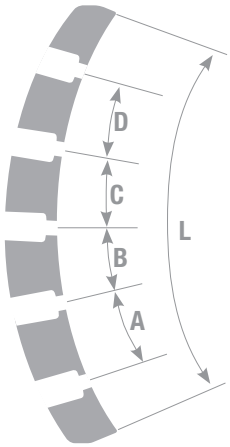

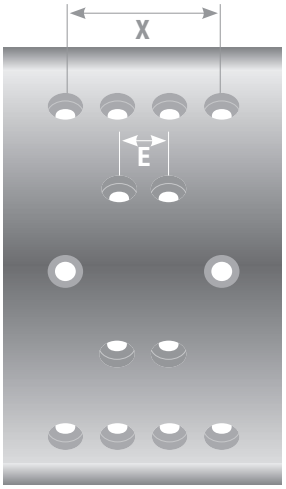

FRAS-LE	BFMC	WVA	FMSI	LonaFlex.	PART TYPE	L	X	A	B	C	D	E
	PB/24/1/2	19263/343 00			ANC	202.70	140.00	40.90	40.90	40.90	40.90	60.00

14-N

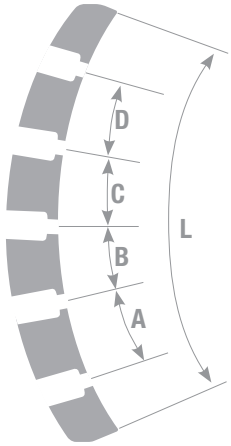

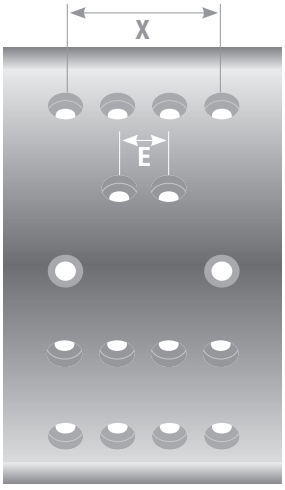

FRAS-LE	BFMC	WVA	FMSI	LonaFlex.	PART TYPE	L	X	A	B	C	D	E
	PB/24/1/2	19263/343 00			CAM	202.70	140.00	40.90	40.90	40.90	40.90	60.00

14-O

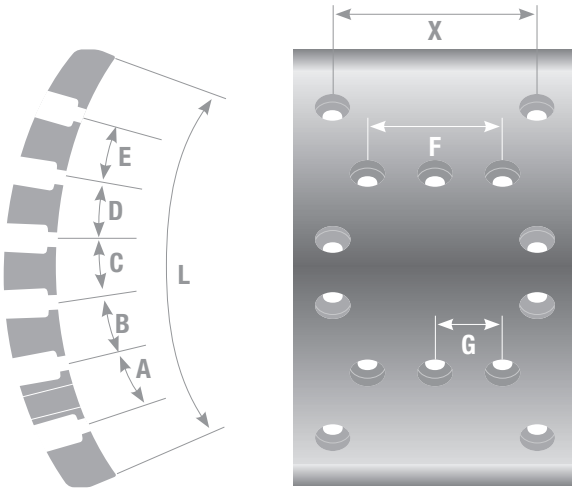

FRAS-LE	BFMC	WVA	FMSI	LonaFlex	PART TYPE	L	X	A	B	C	D	E	F	G
F/1088						197.10	180.00	24.60	23.50	48.00	23.50	24.60	120.00	60.00

14-P

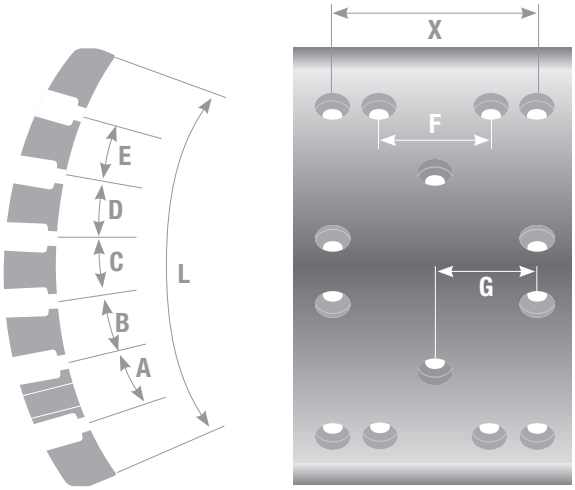

FRAS-LE	BFMC	WVA	FMSI	LonaFlex	PART TYPE	L	X	A	B	C	D	E	F	G
		19244 00				186.10	180.00	23.80	23.80	47.50	23.80	23.80	120.00	90.00

15-B

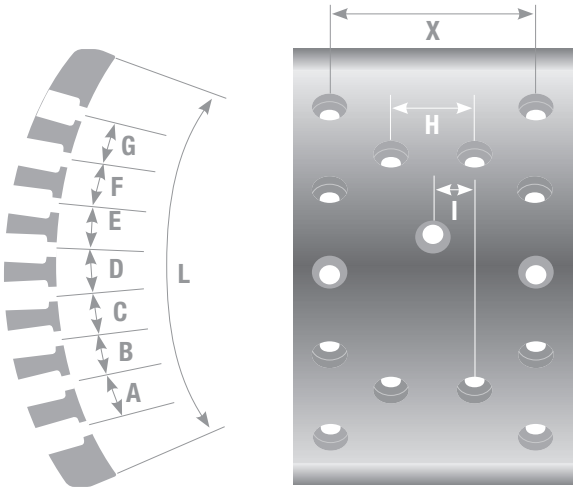

FRAS-LE	BFMC	WVA	FMSI	LonaFlex	PART TYPE	L	X	A	B	C	D	E	F	G	H	I
			4734	L-1058		191.70	139.00	19.70	19.70	19.70	19.70	39.40	19.70	19.70	86.60	43.30
F/788	CB/31/1 R			L-756		191.70	181.50	19.70	19.70	19.70	19.70	39.40	19.70	19.70	105.00	52.50
F/804		19138 00	4747	L-758		197.10	180.00	19.90	19.90	19.90	19.90	39.80	19.90	19.90	104.00	52.00

15-D

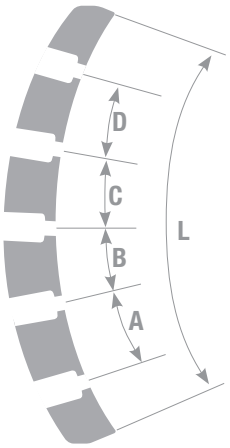

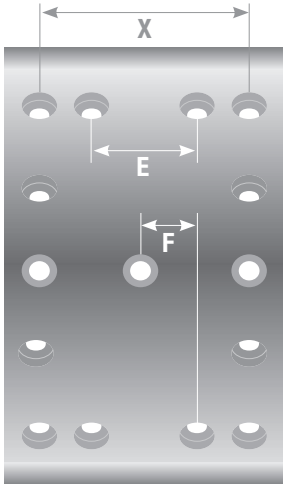

FRAS-LE	BFMC	WVA	FMSI	LonaFlex.	PART TYPE	L	X	A	B	C	D	E	F
F/937			4741	**L-804**		189.00	180.00	39.80	39.80	39.80	39.80	97.00	48.50
F/928				**L-810**		194.40	180.00	40.20	40.20	40.20	40.20	96.00	48.00

16-A

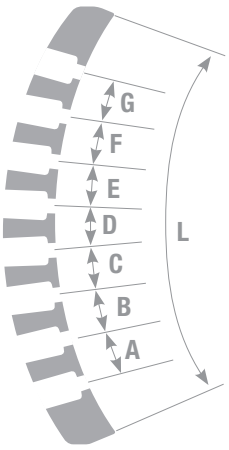

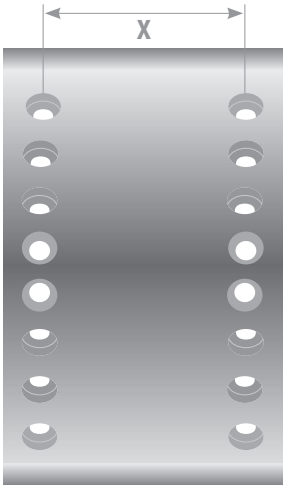

FRAS-LE	BFMC	WVA	FMSI	LonaFlex.	PART TYPE	L	X	A	B	C	D	E	F	G
F/768	LH/103/104/1	17945/946 00		**L-751**	SECUNDARY	324.00	70.00	42.50	42.50	42.50	42.50	42.50	42.50	42.50
FI/115	FI/86/1	17481 00		**L-970**		421.60	90.00	55.30	55.30	55.30	55.30	55.30	55.30	55.30

16-B

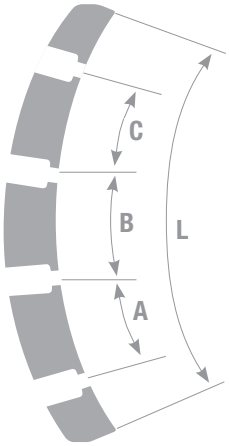

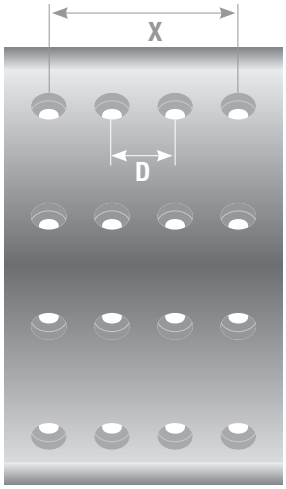

FRAS-LE	BFMC	WVA	FMSI	LonaFlex.	PART TYPE	L	X	A	B	C	D
			4706	**L-966**	CAM	171.20	161.90	53.20	53.20	22.60	79.40

16-B

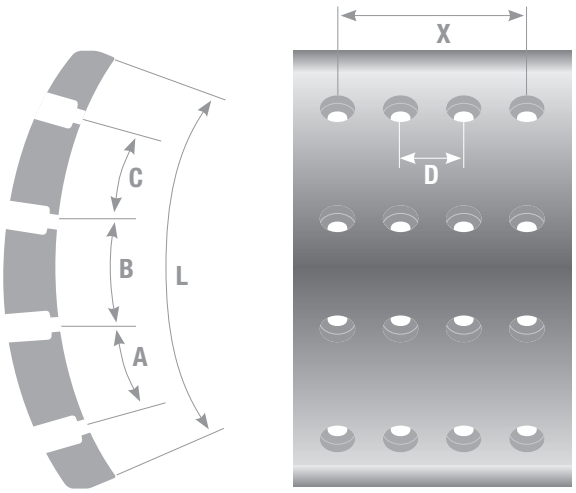

FRAS-LE	BFMC	WVA	FMSI	LonaFlex	PART TYPE	L	X	A	B	C	D
VV/307			4710	**L-640**	CAM	171.20	161.90	53.20	53.20	22.60	79.40
	DF/48/49/1	19063/064 00		**L-838**	CAM	175.60	156.00	46.10	46.10	46.10	80.00
FD/89			4706	**L-966**	ANC	177.10	161.90	53.20	53.20	22.60	79.40
VV/307			4710	**L-640**	ANC	177.10	161.90	53.20	53.20	22.60	79.40
	DF/32/33/1	19890/891 00		**L-959**	CAM	177.40	156.00	46.10	46.10	46.10	80.00
	DF/38/39/1	19914/915 00		**L-962**	CAM	177.40	180.00	46.10	46.10	46.10	80.00
	DF/50/51/1	19069/077 00		**L-839**	ANC	177.40	180.00	46.10	46.10	46.10	80.00
	DF/48/49/1	19063/064 00		**L-838**	ANC	179.20	156.00	46.10	46.10	46.10	80.00
	DF/32/33/1	19890/891 00		**L-959**	ANC	180.90	156.00	46.10	46.10	46.10	80.00
	DF/38/39/1	19914/915 00		**L-962**	ANC	180.90	180.00	46.10	46.10	46.10	80.00
	DF/50/51/1	19069/077 00		**L-839**	CAM	180.90	180.00	46.10	46.10	46.10	80.00
F/1120				**L-1060**		186.70	170.00	51.90	51.90	51.90	96.00
			4515-E	**L-157-E**	CAM	189.10	136.50	58.50	58.50	24.80	69.80
	RW/5/6/4	19613/614 00		**L-1056**	CAM	189.10	136.50	58.50	58.50	24.80	69.80
			4515-H	**L-157-H**	CAM	189.10	136.60	58.50	58.50	24.80	76.20
AC/17					CAM	189.10	139.70	43.90	54.70	43.90	88.90
AC/18					CAM	189.10	161.90	58.50	58.50	24.80	95.20
CA/32				**L-638**	CAM	189.10	161.90	58.50	58.50	24.80	69.90
CA/32-A					CAM	189.10	161.90	58.50	58.50	24.80	69.90
	FT/6/7/1	19557/606 00		**L-972**	CAM	189.10	161.90	58.50	58.50	24.80	82.60
CA/33				**L-636**	CAM	189.10	168.30	58.50	58.50	24.80	85.70
			4728	**L-914**	CAM	189.10	174.60	58.50	58.50	24.80	104.80
	FU/4/5/6		4551-B	**L-696-B**	CAM	189.10	177.80	58.50	58.50	24.80	98.40
	RW/1/2/5	19017/997 00	4644-A	**L-993-A**	CAM	189.10	177.80	58.50	58.50	24.80	98.40
			4552	**L-888**	CAM	189.10	215.90	58.50	58.50	24.80	111.10
CA/36				**L-635**	CAM	189.10	219.10	58.50	58.50	24.80	104.80
			4515-E	**L-157-E**	ANC	194.60	136.50	58.50	58.50	24.80	69.80
	RW/5/6/4	19613/614 00		**L-1056**	ANC	194.60	136.50	58.50	58.50	24.80	69.80
			4515-H	**L-157-H**	ANC	194.60	136.60	58.50	58.50	24.80	76.20
AC/17					ANC	194.60	139.70	43.90	54.70	43.90	88.90
AC/18					ANC	194.60	161.90	58.50	58.50	24.80	95.20
CA/32				**L-638**	ANC	194.60	161.90	58.50	58.50	24.80	69.90
CA/32-A					ANC	194.60	161.90	58.50	58.50	24.80	69.90
	FT/6/7/1	19557/606 00		**L-972**	ANC	194.60	161.90	58.50	58.50	24.80	82.60
CA/33				**L-636**	ANC	194.60	168.30	58.50	41.70	41.70	85.70
			4728	**L-914**	ANC	194.60	174.60	58.50	41.70	41.70	104.80
	FU/4/5/6		4551-B	**L-696-B**	ANC	194.60	177.80	58.50	58.50	24.80	98.40
	RW/1/2/5	19017/997 00	4644-A	**L-993-A**	ANC	194.60	177.80	58.50	58.50	24.80	98.40
			4552	**L-888**	ANC	194.60	215.90	58.50	58.50	24.80	111.10
CA/36				**L-635**	ANC	194.60	219.10	58.50	41.70	41.70	104.80
		19728/741 00			ANC	195.30	178.00	43.80	54.50	43.80	90.00
		19728/741 00			CAM	195.30	178.00	43.80	54.50	43.80	90.00
	CW/11/1	19887 00		**L-952**		195.60	139.70	66.30	66.30	29.80	57.40
	CW/12/1	19921 00		**L-953**		195.60	165.10	66.30	66.30	29.80	69.60
			4471-B	**L-926-B**	CAM	195.80	136.50	32.00	32.00	64.00	69.80

16-B

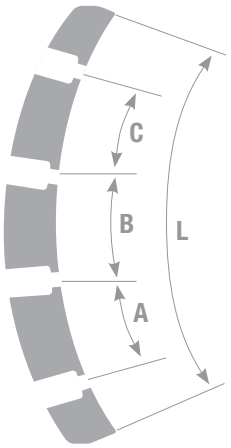

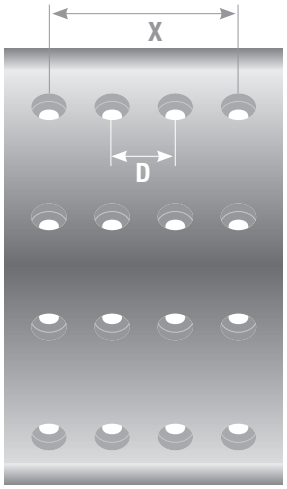

FRAS-LE	BFMC	WVA	FMSI	LonaFlex.	PART TYPE	L	X	A	B	C	D
			4726	**L-913**		196.10	177.80	44.60	62.40	37.40	88.90
F/955				**L-964**	ANC	198.10	138.00	54.20	54.00	54.20	78.00
F/955				**L-964**	CAM	198.10	138.00	54.20	54.00	54.20	78.00
			4471-B	**L-926-B**	ANC	201.30	136.50	32.00	32.00	64.00	69.80
			4625-A	**L-741-A**	ANC	212.80	136.50	58.50	58.50	42.60	69.80
			4625-A	**L-741-A**	CAM	212.80	136.50	58.50	58.50	49.60	69.80
		19897/898 00	4625-B	**L-741-B**	ANC	212.80	136.50	58.50	58.50	42.60	76.20
		19897/898 00	4625-B	**L-741-B**	CAM	212.80	136.50	58.50	58.50	49.60	76.20
SV/229	SV/40/2	19931 00		**L-308**		235.00	146.00	62.00	62.00	62.00	80.00
SV/230	SV/41/2	19932 00		**L-309**		235.00	171.00	62.00	62.00	62.00	80.00
SV/231	SV/42/2	19933 00		**L-310**		235.00	216.00	62.00	62.00	62.00	80.00

16-C

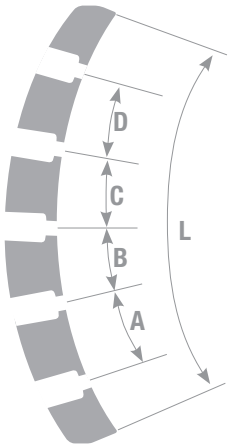

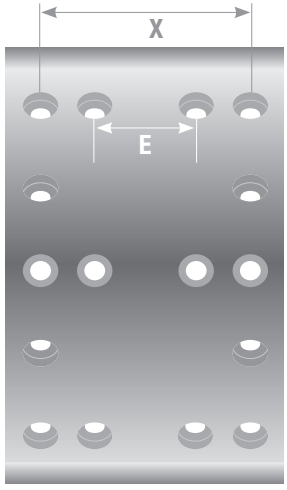

FRAS-LE	BFMC	WVA	FMSI	LonaFlex.	PART TYPE	L	X	A	B	C	D	E
			4311-C	**L-358-C**		196.20	139.70	36.60	36.60	36.60	36.60	63.50
			4674	**L-904**		196.20	177.80	36.60	36.60	36.60	36.60	88.90

16-F

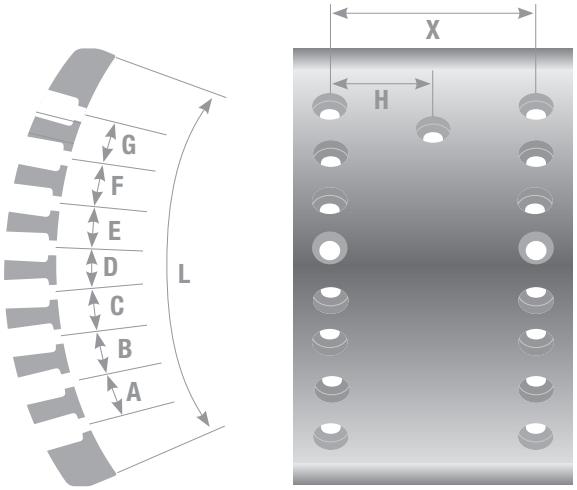

FRAS-LE	BFMC	WVA	FMSI	LonaFlex.	PART TYPE	L	X	A	B	C	D	E	F	G	H
FN/106				L-104-A		388.80	60.00	49.50	49.50	49.50	49.50	49.50	49.50	49.50	30.00

16-I

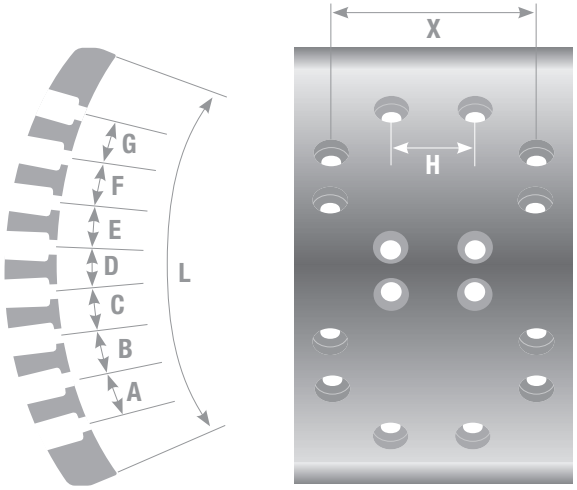

FRAS-LE	BFMC	WVA	FMSI	LonaFlex.	PART TYPE	L	X	A	B	C	D	E	F	G	H
F/764		17413	1534	L-403		312.50	95.00	40.00	40.00	40.00	36.20	40.00	40.00	40.00	80.00

16-J

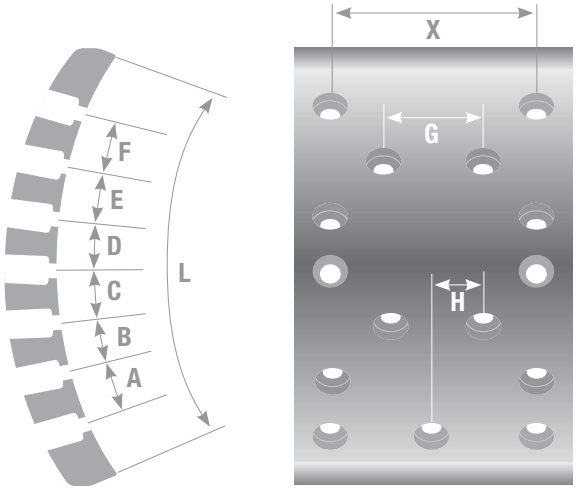

FRAS-LE	BFMC	WVA	FMSI	LonaFlex.	PART TYPE	L	X	A	B	C	D	E	F	G	H
F/835				L-761		191.30	176.00	39.60	19.80	19.80	39.60	19.80	19.80	92.00	46.00

16-K

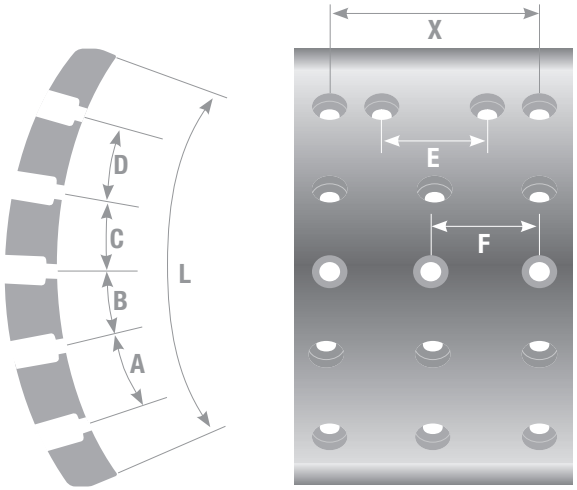

FRAS-LE	BFMC	WVA	FMSI	LonaFlex.	PART TYPE	L	X	A	B	C	D	E	F
F/834				L-760		191.30	158.00	39.60	39.60	39.60	39.60	112.00	79.00

16-L

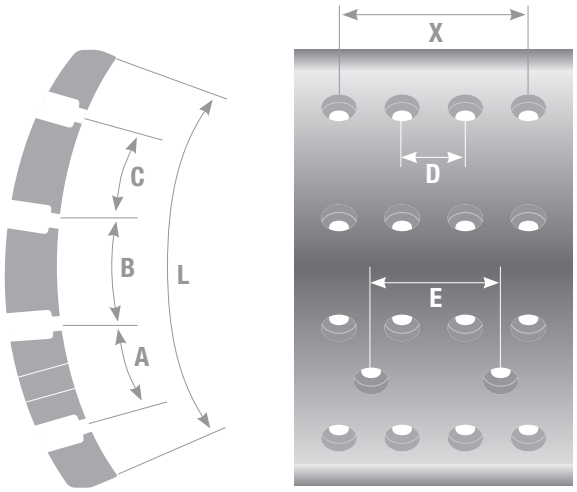

FRAS-LE	WVA	BFMC	FMSI	LonaFlex.	PART TYPE	L	X	A	B	C	D	E
CA/32-A					CAM	189.10	161.90	58.50	58.50	24.80	69.90	111.80

16-M

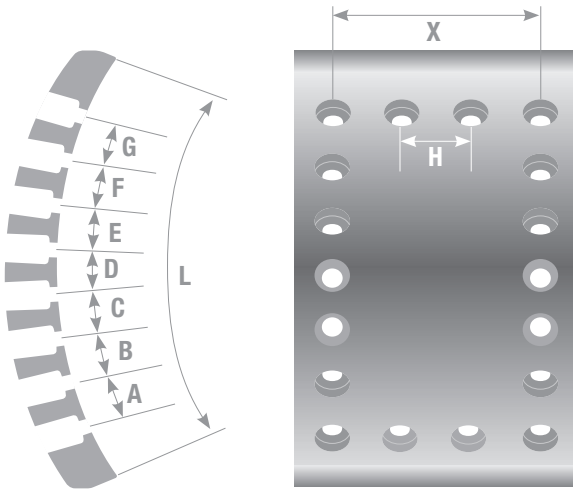

FRAS-LE	WVA	BFMC	FMSI	LonaFlex.	PART TYPE	L	X	A	B	C	D	E	F	G	H
			1455	L-773		308.50	80.00	2.80	54.00	54.00	54.00	54.00	54.00	54.00	34.00

17-A

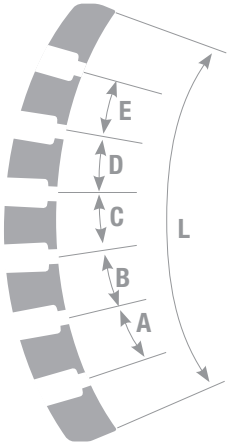

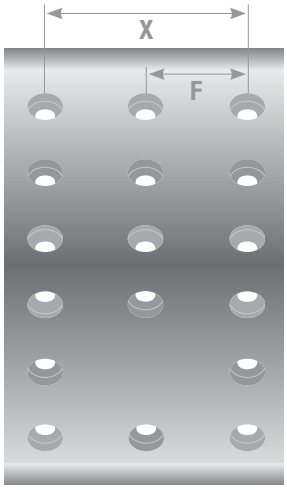

FRAS-LE	BFMC	WVA	FMSI	LonaFlex.	PART TYPE	L	X	A	B	C	D	E	F
	LE/60/1/2	19066/067 00		**L-825**	PRIMARY	310.30	162.60	62.10	49.60	49.60	49.60	62.10	81.30
	LE/64/1/2	19178/179 00		**L-994**	PRIMARY	315.80	139.70	63.20	50.50	50.50	50.50	63.20	69.80

17-B

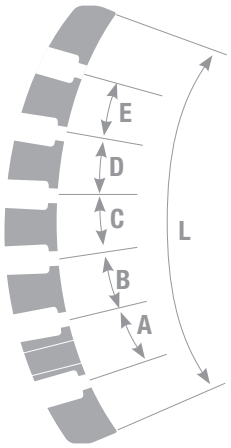

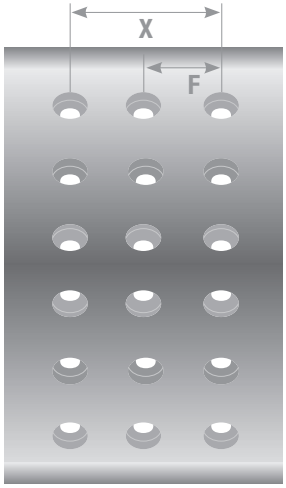

FRAS-LE	BFMC	WVA	FMSI	LonaFlex.	PART TYPE	L	X	A	B	C	D	E	F
	LE/60/1/2	19066/067 00		**L-825**	SECUNDARY	310.30	162.60	62.10	49.60	49.60	49.60	62.10	81.30
	LE/64/1/2	19178/179 00		**L-994**	SECUNDARY	315.80	139.70	63.20	50.50	50.50	50.50	63.20	69.80

17-C

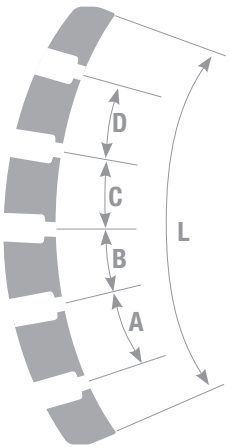

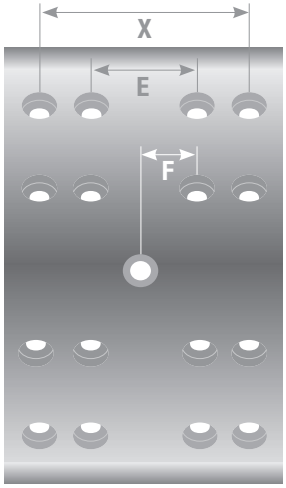

FRAS-LE	WVA	BFMC	FMSI	LonaFlex.	PART TYPE	L	X	A	B	C	D	E	F
F/818				**L-793**		186.70	170.00	51.90	26.00	26.00	51.90	96.00	48.00
F/786				**L-754**		191.70	170.50	53.40	26.80	26.60	53.40	96.00	48.00
F/1131						191.70	180.00	52.60	26.30	26.30	52.60	96.00	48.00

17-D

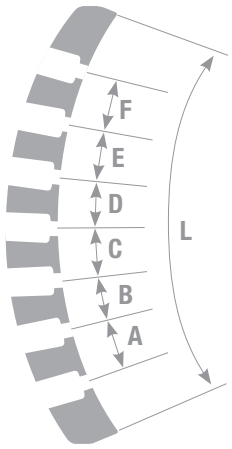

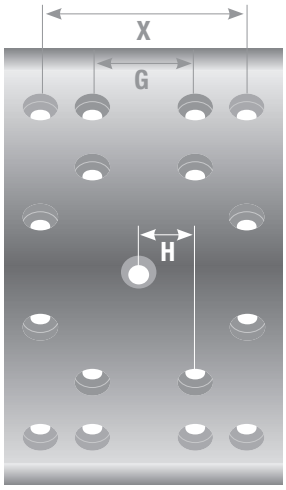

FRAS-LE	BFMC	WVA	FMSI	LonaFlex.	PART TYPE	L	X	A	B	C	D	E	F	G	H
	NN/100/1			**L-1061**		191.30	150.00	37.90	14.80	23.10	29.70	13.20	39.60	107.50	53.70
	NN/101/1					191.30	190.00	37.90	14.80	23.10	29.70	13.20	39.60	107.50	53.70

18-C

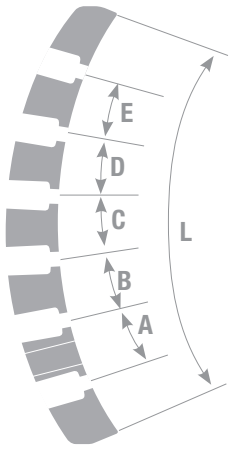

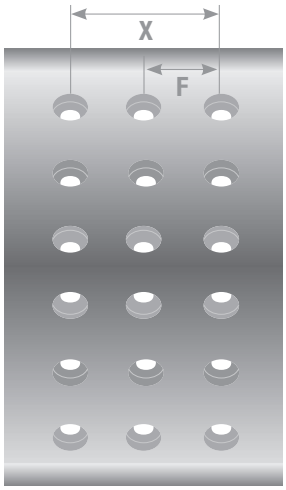

FRAS-LE	WVA	BFMC	FMSI	LonaFlex.	PART TYPE	L	X	A	B	C	D	E	F
	19111 00	GG/92/1		**L-983**		358.40	146.10	66.60	66.60	66.60	66.60	66.60	73.00
	19371 00	GG/142/1		**L-976**		358.40	171.50	66.60	66.60	66.60	66.60	66.60	85.70

18-D

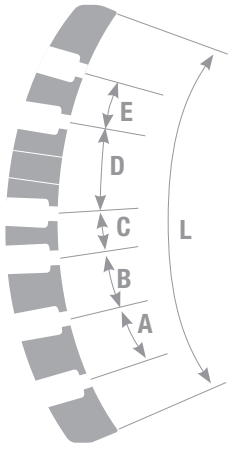

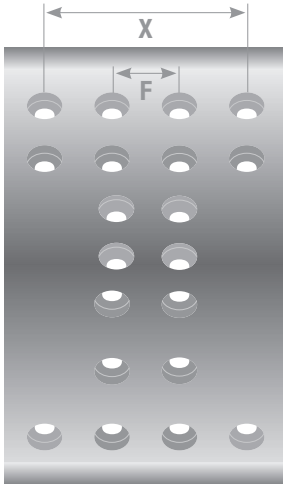

FRAS-LE	WVA	BFMC	FMSI	LonaFlex.	PART TYPE	L	X	A	B	C	D	E	F
			4633-A	**L-899-A**		238.30	146.00	35.00	30.60	35.00	48.10	48.10	79.20

18-E

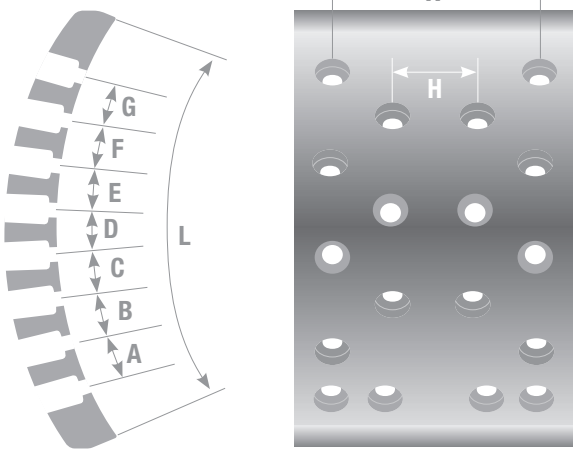

FRAS-LE	BFMC	WVA	FMSI	LonaFlex.	PART TYPE	L	X	A	B	C	D	E	F	G	H
	FI/124/1	19918 00		**L-628**		317.70	130.00	40.40	40.40	40.40	40.40	40.40	40.40	40.40	60.00

22-A

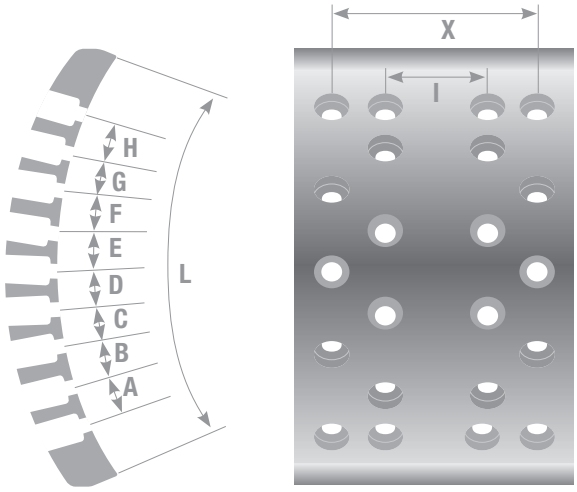

FRAS-LE	BFMC	WVA	FMSI	LonaFlex.	PART TYPE	L	X	A	B	C	D	E	F	G	H	I
	SA/10/11/1	19049/199 95		**L-827**	PRIMARY	284.80	100.00	31.00	31.00	31.00	31.00	31.00	31.00	31.00	31.00	55.00

24-D

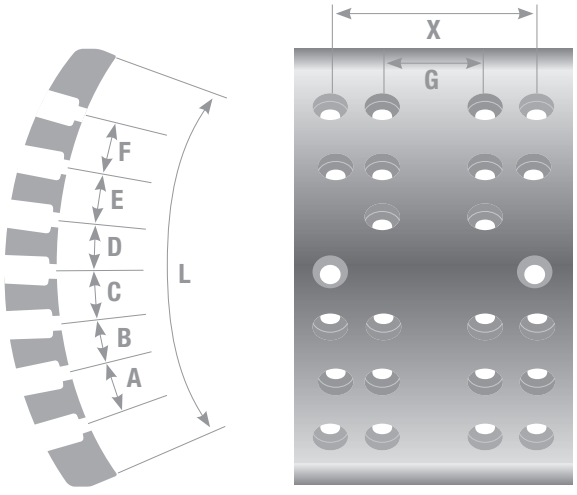

FRAS-LE	BFMC	WVA	FMSI	LonaFlex.	PART TYPE	L	X	A	B	C	D	E	F	G
	CW/7/1		4618	**L-895**		321.80	165.10	56.50	56.50	56.50	28.20	28.20	56.50	107.90

26-A

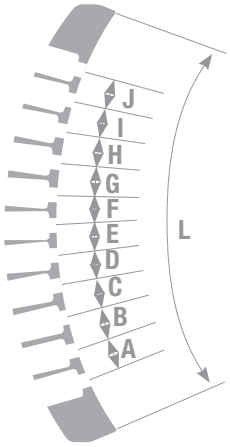

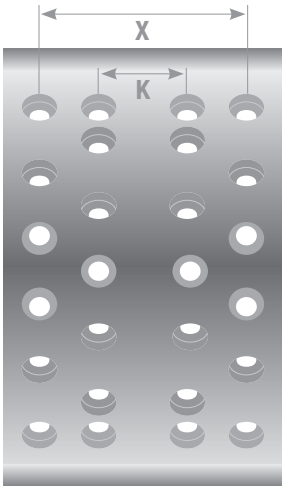

FRAS-LE	BFMC	WVA	FMSI	LonaFlex.	PART TYPE	L	X	A	B	C	D	E	F	G	H	I	J	K
	SA/10/11/1	19049/199 95		**L-827**	SECUNDARY	346.70	100.00	31.00	31.00	31.00	31.00	31.00	31.00	31.00	31.00	31.00	31.00	55.00

28-A

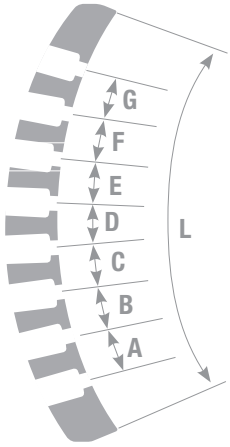

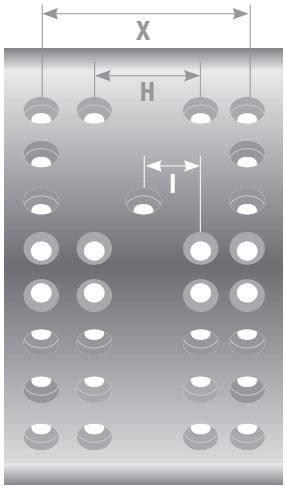

FRAS-LE	WVA	BFMC	FMSI	LonaFlex.	PART TYPE	L	X	A	B	C	D	E	F	G	H	I
FN/107				**L-103-A**		388.80	110.00	49.50	49.50	49.50	49.50	49.50	49.50	49.50	36.00	18.00

FRAS-LE®



Brake Shoes with Lining

Zapatas de Freno con Guarniciones

FRAS-LE	Dimensions Dimensiones	
AM/323-CP	ø200.0x36.0	Asia / Kia Motors
CB/46-CP	ø230.0x42.0	GM
CB/49-CPA	ø200.0x29.0	GM
CB/51-CP	ø279.4x65.0	Ford / GM
CB/51-CPA	ø279.4x65.0	GM
CB/57-CP	ø330,2x65.0	GM
CB/58-CPA	ø200.0x46.0	Daewoo / GM
CB/132-CP	ø279.4x52.0	GM
CB/132-CPA	ø279.4x52.0	GM
CB/175-CP	ø160.0x25.0	GM
CB/176-CP	ø220.0x42.0	GM
CB/177-CP	ø190.0x25.0	GM
CI/321-CPA	ø203.0x39.0	Citroen
CI/344-CPA	ø203.0x39.0	Citroen / Peugeot
FD/61-CPA	ø180.0x32.0	Ford / GM
FD/63-CPA	ø203.0x38.0	Ford / Volkswagen
FD/64-CPA	ø180.0x32.0	Ford / Volkswagen
FD/98-CP	ø203.0x38.0	Ford
FD/99-CP	ø184.0x30.0	Chrysler / Ford
FD/100-CP	ø228.0x47.0	Ford
FD/101-CP	ø330.0x70.6	Ford
FD/126-CPA	ø203.0x38.0	Ford / Volkswagen
FD/130-CPA	ø229.0x45.0	Ford
FD/134-CP	ø180.0x32.0	Ford
FD/137-CP	ø280.0x57.0	Chrysler / Ford
FD/138-CPA	ø203.0x39.0	Ford
FD/140-CPA	ø203.0x38.0	Ford
FD/141-CPA	ø229.0x44.0	Ford
FD/150-CP	ø254.0x63.0	Ford
FD/151-CP	ø206.0x42.0	Ford
FD/152-CPA	ø203.0x21.0	Ford
FI/90-CP	ø185.0x30.0	Fiat
FI/91-CP	ø228.6x40.0	Fiat
FI/96-CPA	ø180.0x32.0	Fiat
FI/97-CP	ø180.0x30.0	Fiat
FI/97-CPA	ø180.0x30.0	Fiat
FI/125-CP	ø228.6x42.0	Fiat
FI/127-CPA	ø230.0x42.0	Fiat
FI/129-CPA	ø228.0x42.0	Fiat
FI/135-CP	ø180.0x32.0	Fiat
FI/136-CP	ø228.0x42.0	Fiat
FI/170-CPA	ø254.0x57.0	Citroen / Fiat / Peugeot
FI/196-CP	ø180.0x40.0	Citroen / Fiat / Peugeot
FI/199-CPA	ø254.0x57.0	Citroen / Fiat / Peugeot
FI/219 - CPA	ø200.0x38.0	Fiat
FI/220-CPA	ø228.6x40.0	Fiat
FI/322-CP	ø172.0x42.0	Citroen / Fiat / Peugeot
HA/380-CP	ø228.6x41.0	Asia
HO/173-CPA	ø203.0x35.0	Honda
HO/197-CPA	ø180.0x30.0	Honda
HO/332-CP	ø180.0x31.0	Honda
HO/333-CP	ø200.0x36.0	Honda
HO/334-CPA	ø191.0x34.5	Honda
HY/336-CP	ø228.0x42.0	Hyundai
HY/337-CP	ø170.0x27.0	Hyundai
HY/338-CP	ø220.0x54.0	Hyundai
HY/339-CPA	ø180.0x35.0	Hyundai
HY/340-CP	ø168.0x25.0	Hyundai

FRAS-LE	Dimensions Dimensiones	
HY/340-CPA	ø168.0x25.0	Hyundai
IV/163-CP	ø177,8x42.0	Iveco
KI/133-CP	ø260.0x51.0	Asia / Kia Motors
KI/143-CP	ø254.0x60.0	Kia Motors
KI/144-CP	ø260.0x51.0	Hyundai
KI/200-CP	ø254.0x60.0	Kia Motors
KI/360-CP	ø254.0x54.0	Kia Motors
KI/361-CP	ø180.0x32.0	Kia Motors
KI/362-CPA	ø203.0x36.0	Kia Motors
LD/123-CP	ø250.0x51.0	Lada
MB/156-CP	ø255.0x55.0	Hyundai / Mercedes-Benz
MB/157-CP	ø280.0x63.5	Mercedes-Benz
MB/162-CP	ø180.0x40.0	Mercedes-Benz
MB/169-CPA	ø180.0x40.0	Mercedes-Benz
MI/139-CP	ø254.0x51.0	Mitsubishi
MI/198-CP	ø279.0x52.0	Mitsubishi
MI/370-CP	ø295.0x50.0	Mitsubishi / Volkswagen
NI/174-CP	ø295.0x50.0	Nissan
NI/175-CP	ø260.0x50.0	Nissan
NI/176-CP	ø228.0x37.0	Nissan
NI/177-CP	ø203.0x35.0	Nissan
PE/172-CPA	ø228.0x42.0	Citroen / Peugeot
PG/202-CP	ø180.0x30.0	Peugeot
PG/203-CP	ø180.0x32.0	Citroën / Peugetot
PG/204-CPA	ø180.0x32.0	Citroën / Peugetot
PG/205-CPA	ø255.0x61.0	Peugeot
PG/206-CP	ø164.0x32.0	Citroën / Peugetot
PG/207-CPA	ø228,6x42.0	Peugeot
PG/208-CP	ø180.0x32.0	Citroën / Peugetot
PG/209-CPA	ø203.0x39.0	Peugeot
RN/131-CPA	ø203.0x38.0	Renault / Fiat
RN/171-CPA	ø228.0x42.0	Renault
RN/212-CPA	ø180.0x42.0	Renault
RN/213-CP	ø203.0x38.0	Renault
RN/214-CP	ø228.6x40.0	Renault
RN/215-CP	ø180.0x42.0	Reanult
RN/216-CP	ø203.0x39.0	Reanult
RN/324-CPA	ø180.0x42.0	Renault
RN/325-CPA	ø203.0x39.0	Reanult
RN/326-CPA	ø255.0x46.0	Renault
TY/320-CP	ø200.0x31.0	Toyota
TY/325-CP	ø200.0x35.0	Toyota
TY/326-CP	ø295.0x50.0	Toyota
TY/327-CP	ø279.0x60.0	Toyota
TY/328-CPA	ø180.0x22.0	Toyota
VW/276-CPA	ø200.0x40.0	Seat / Volkswagen
VW/279-CPA	ø254.0x56.0	Volkswagen
VW/280-CPA	ø230.0x32.0	Volkswagen
VW/281-CPA	ø200.0x40.0	Volkswagen
VW/282-CPA	ø294.0X56.0	Volkswagen
FI/330-CPA	ø203.0x38.0	Fiat
CB/153-CPA	Ø200.0x37.0	General Motorss
CB/416-CPA	Ø200.0x30.0	General Motorss
CB/417-CPA	Ø230.0x47.0	General Motorss
RN/329-CPA	Ø203.0X42.0	Renault
HY/418-CPA	Ø203.0x32.0	Hyundai
FD/102-CPA	Ø228.6X43.0	Ford

CB/175-CP Ø 160 X 25 mm

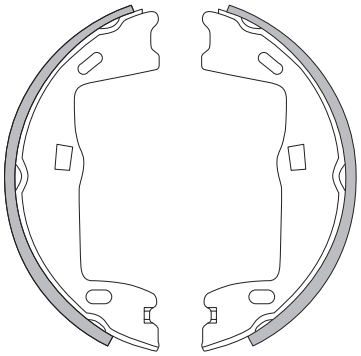

PG/206-CP Ø 164x32mm

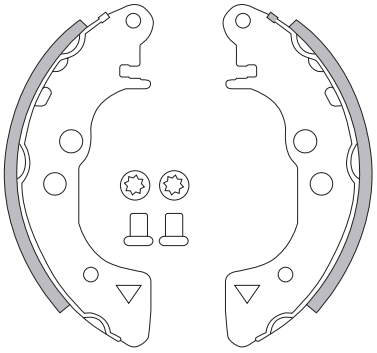

HY/340-CP Ø 168x25mm

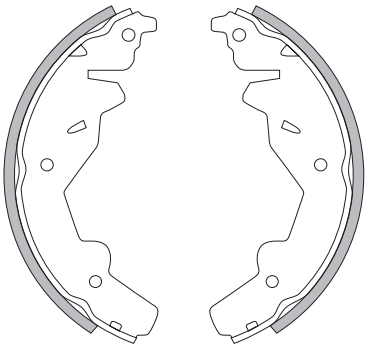

HY/337-CP Ø 170x27mm

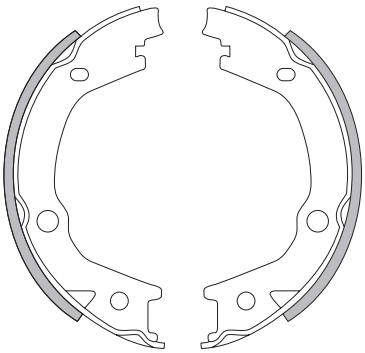

FI/322-CP Ø 172x42mm

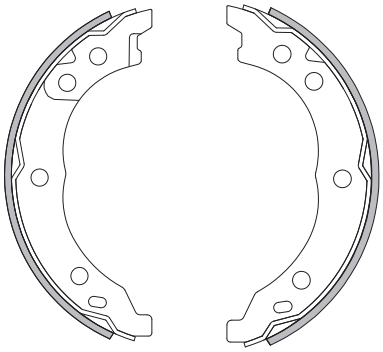

IV/163-CP Ø 177.8x42mm

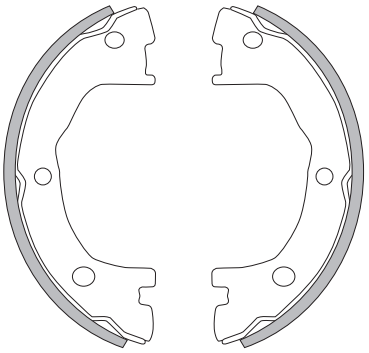

TY/328-CPA Ø 180x22mm

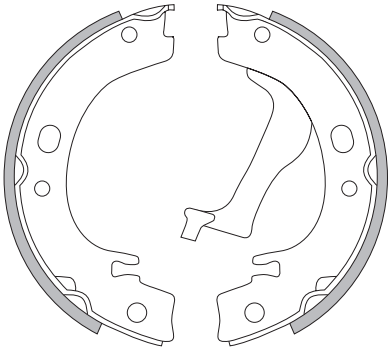

FI/97-CP Ø 180x30mm

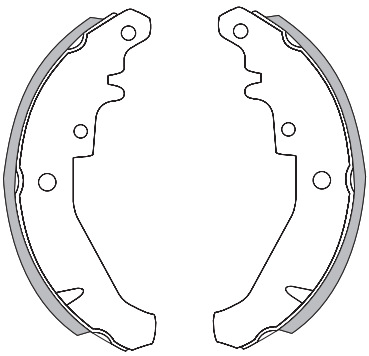

FI/97-CPA Ø 180x30mm

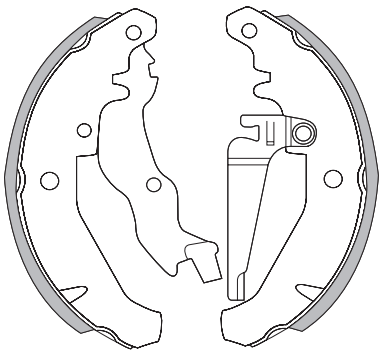

HO/197-CPA Ø 180x30mm

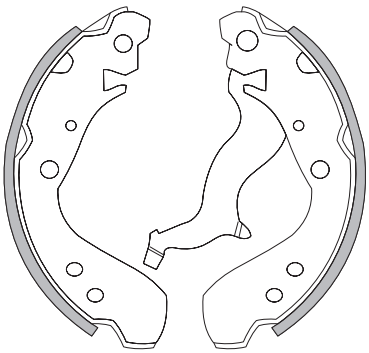

PG/202-CP Ø 180x32mm

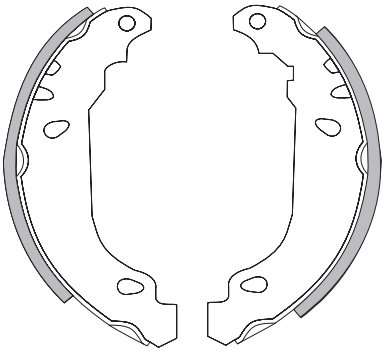

HO/332-CP Ø 180x31mm

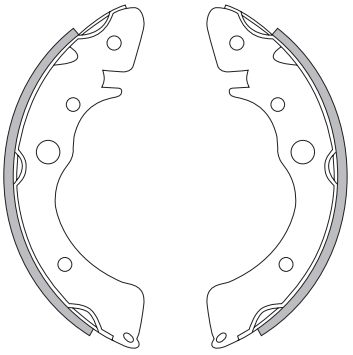

FD/61-CPA Ø 180x32mm

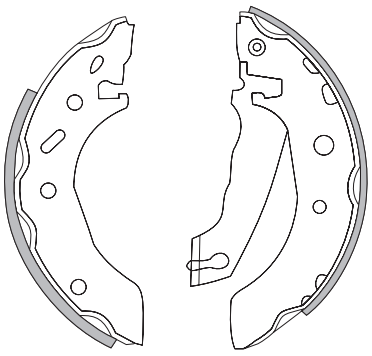

FD/64-CPA Ø 180x32mm

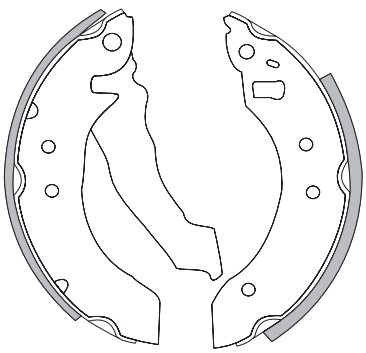

FD/134-CP Ø 180x32mm

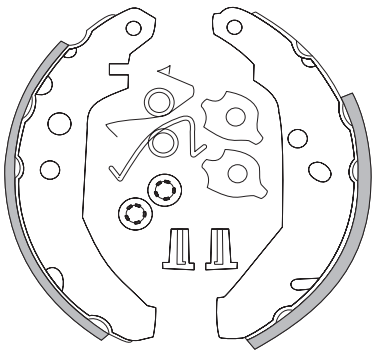

FI/96-CPA Ø 180x32mm

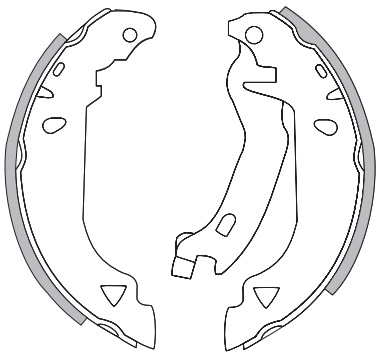

FI/135-CP Ø 180x32mm

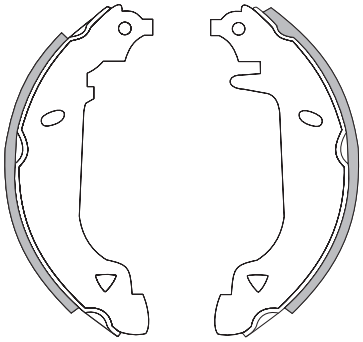

KI/361-CP Ø 180x32mm

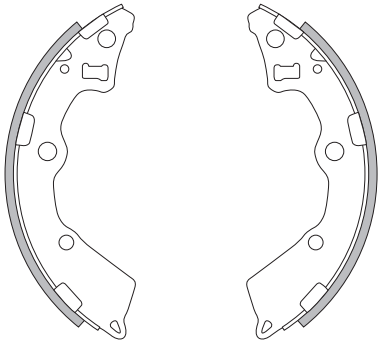

PG/203-CP Ø 180x32mm

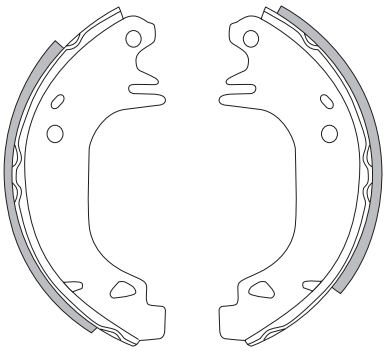

PG/204-CPA Ø 180x32mm

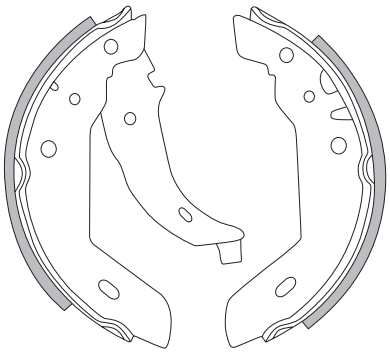

PG/208-CP Ø 180x32mm

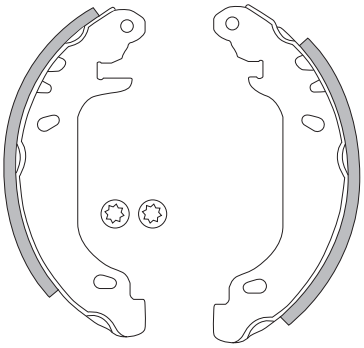

HY/339-CPA Ø 180x35mm

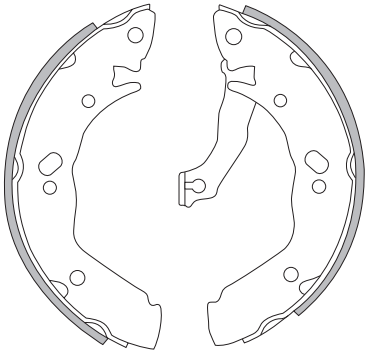

FI/196-CP Ø 180x40mm

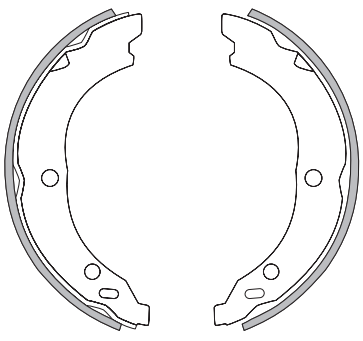

MB/162-CP Ø 180x40mm

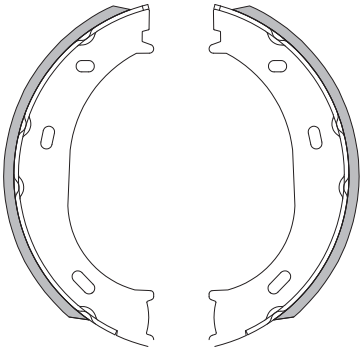

MB/169-CPA Ø 180x40mm

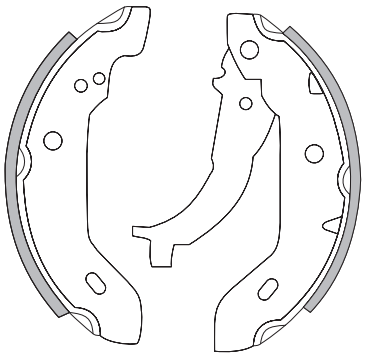

RN/212-CPA Ø 180x42mm

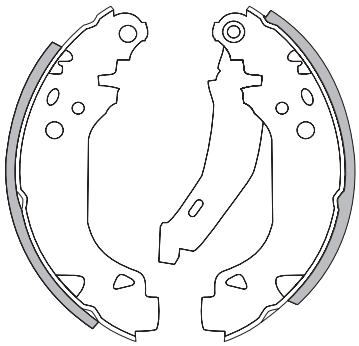

RN/215-CP Ø 180x42mm

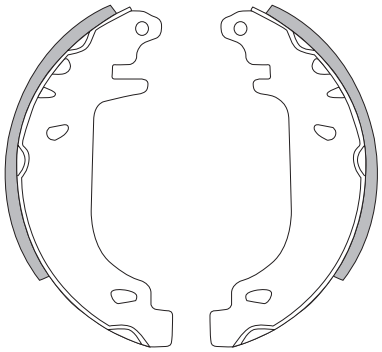

RN/324-CPA Ø 180x42mm

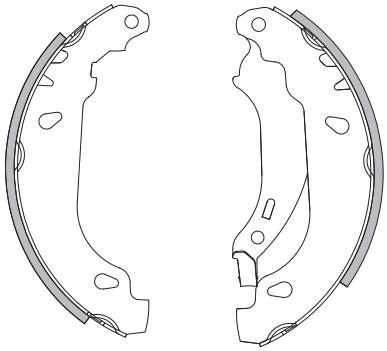

FD/99-CP Ø 184x30mm

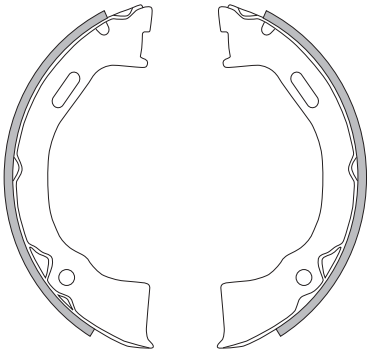

FI/90-CP Ø 185x30mm

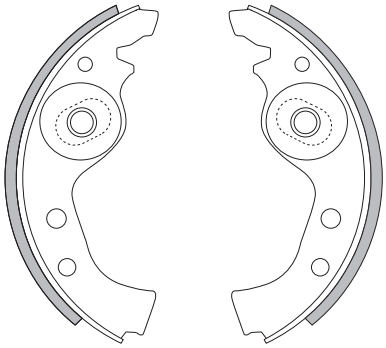

HO/334-CPA Ø 191x34,5mm

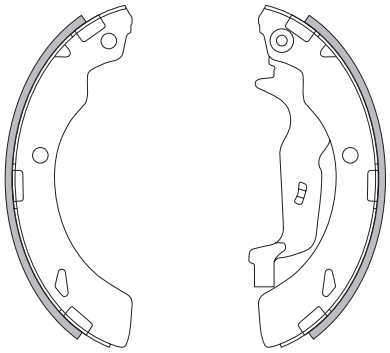

CB/49-CPA Ø 200x29mm

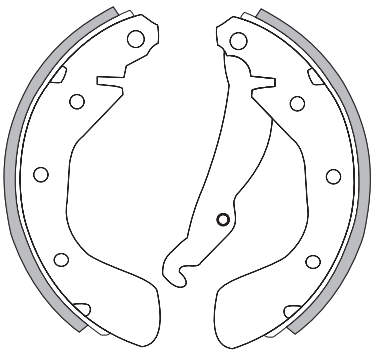

CB/416-CPA Ø 200x36mm

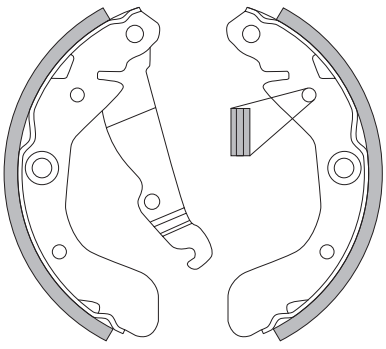

TY/320-CP Ø 200x31mm

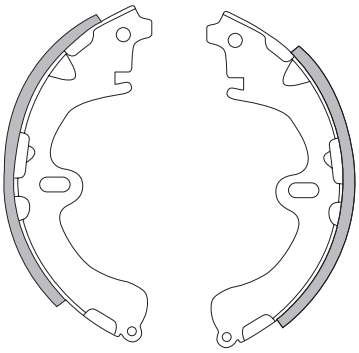

TY/325-CP Ø 200x35mm

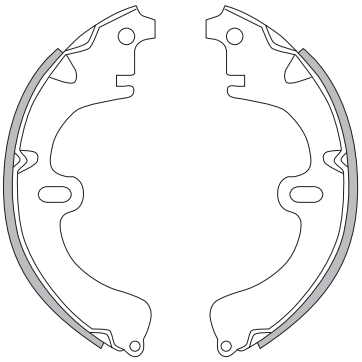

AM/323-CP Ø 200x36mm

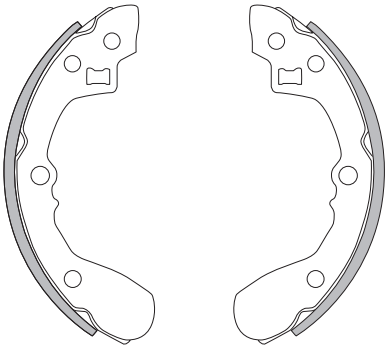

HO/333-CP Ø 200x36mm

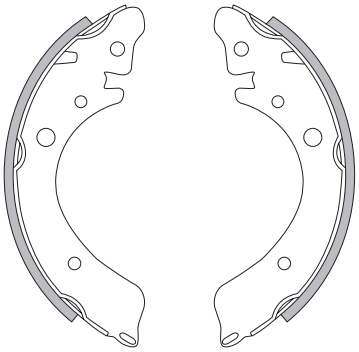

CB/153-CPA Ø 200x37 mm

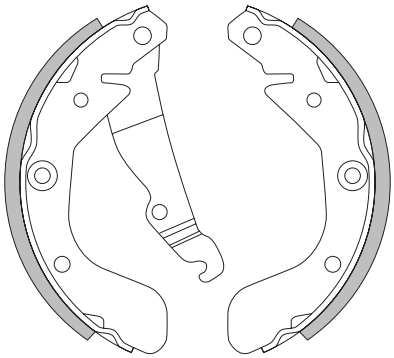

FI/219-CPA Ø 200x38mm

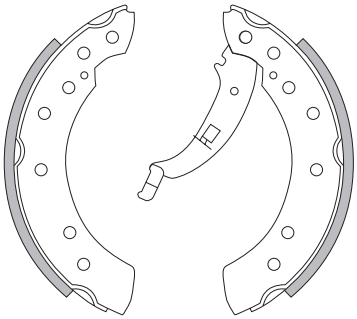

VW/276-CPA Ø 200 X 40 mm

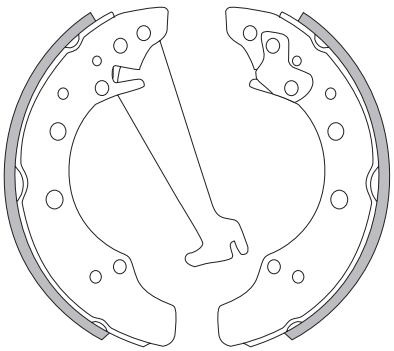

VW/281-CPA Ø 200x40mm

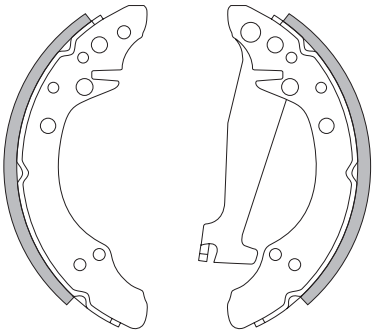

CB/58-CPA Ø 200x46mm

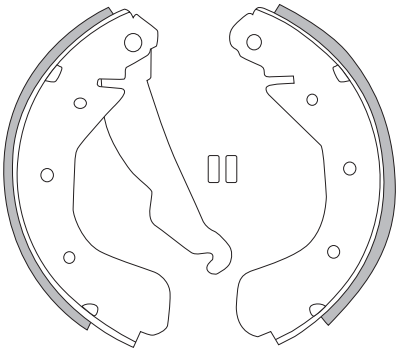

FD/152-CPA Ø 203x21mm

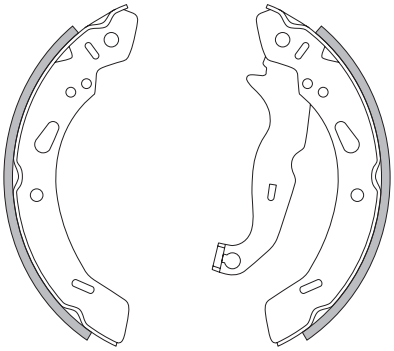

HY/418-CPA Ø 203,2x32mm

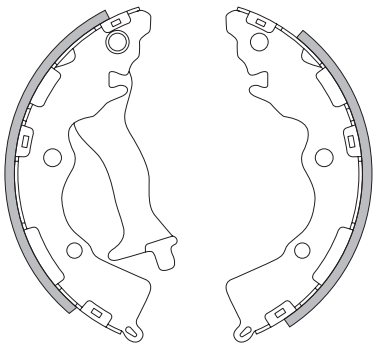

HO/173-CPA Ø 203x35mm

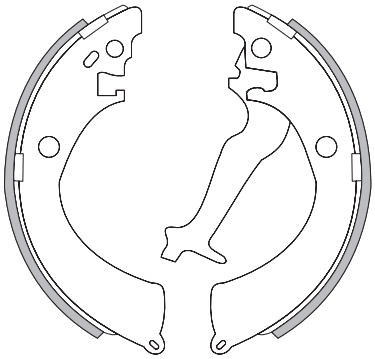

NI/177-CP Ø 203x35mm

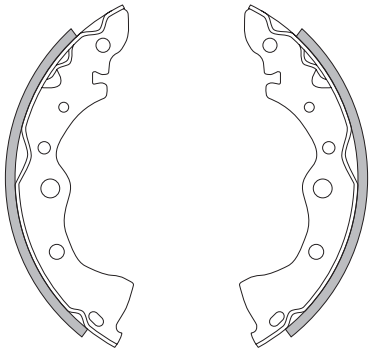

KI/362-CPA Ø 203x36mm

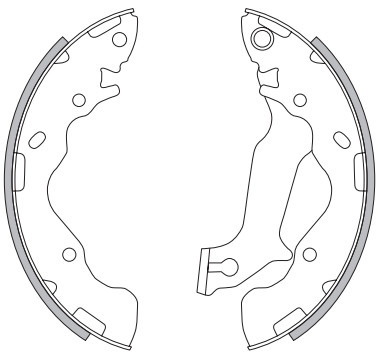

FD/63-CPA Ø 203x38mm

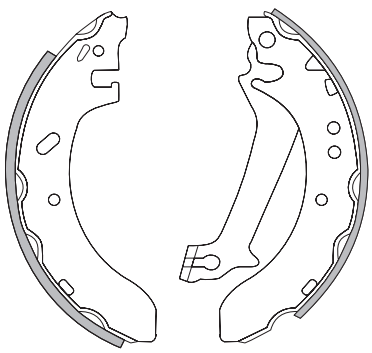

FRAS-LE

FD/98-CPA Ø 203x38mm

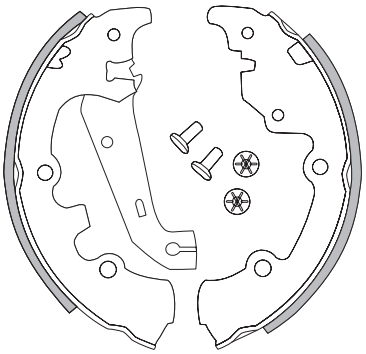

FD/126-CPA Ø 203x38mm

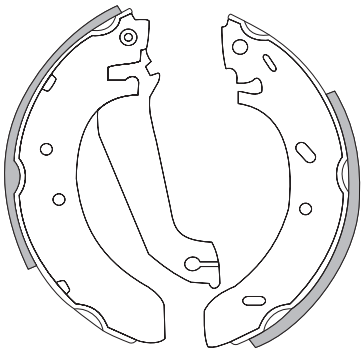

FD/140-CPA Ø 203x38mm

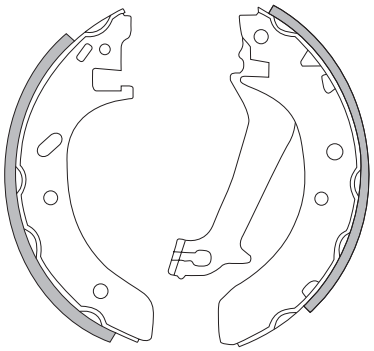

RN/131-CPA Ø 203x38mm

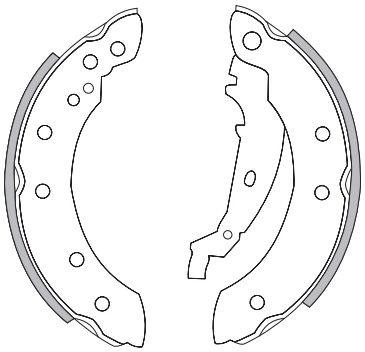

RN/213-CP Ø 203x38mm

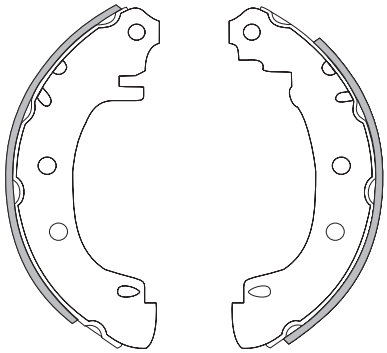

FI/330-CPA Ø 203x38 mm

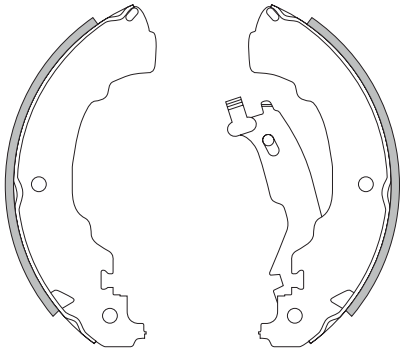

CI/321-CPA Ø 203x39mm

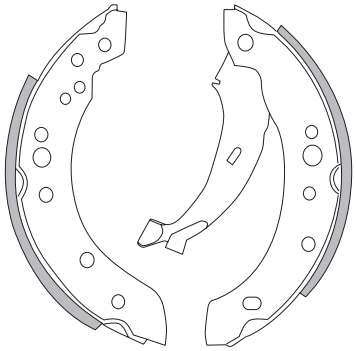

CI/344-CPA Ø 203x39mm

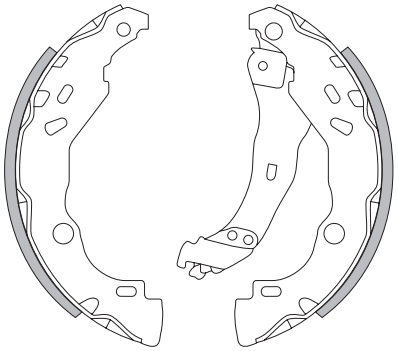

FD/138-CPA Ø 203x39mm

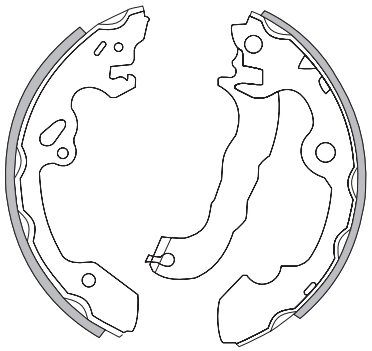

PG/209-CPA Ø 203x39mm

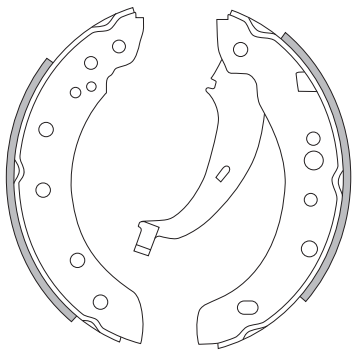

RN/216-CP Ø 203x39mm

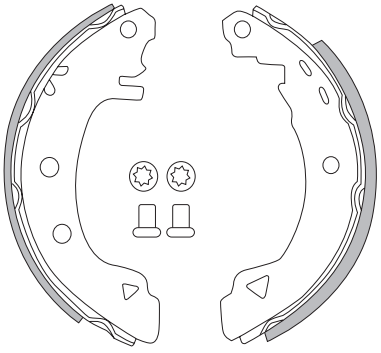

RN/325-CPA Ø 203x39mm

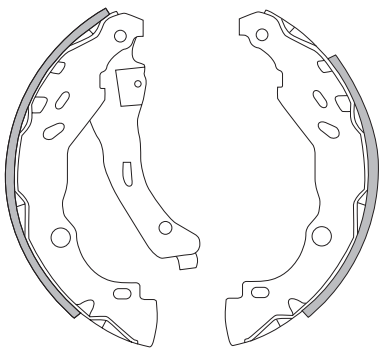

RN/329-CPA Ø 230x42mm

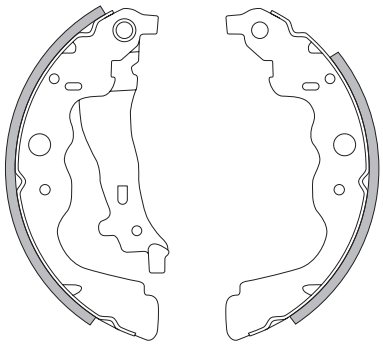

FD/151-CP Ø 206x42mm

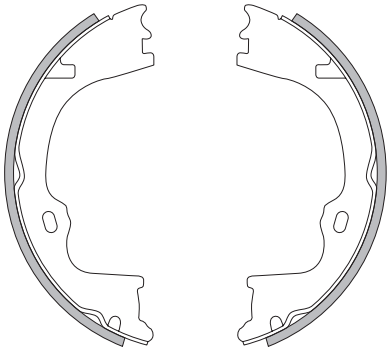

CB/176-CP Ø 220x42mm

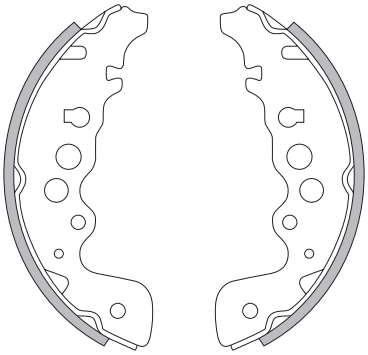

HY/338-CP Ø 220x54mm

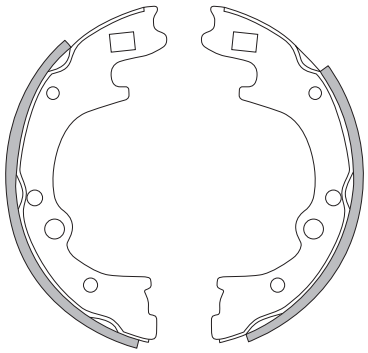

PG/207-CPA Ø 228.6x42mm

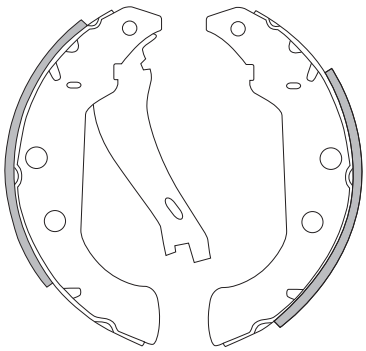

NI/176-CP Ø 228x37mm

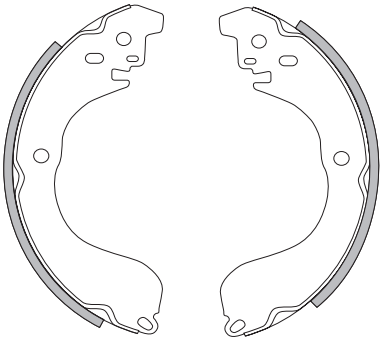

FI/129-CPA Ø 228x42mm

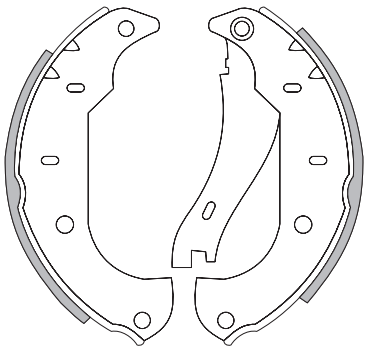

FI/136-CP Ø 228x42mm

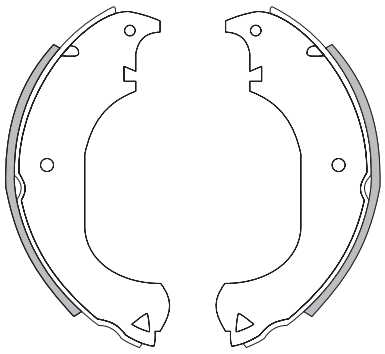

HY/336-CP Ø 228x42mm

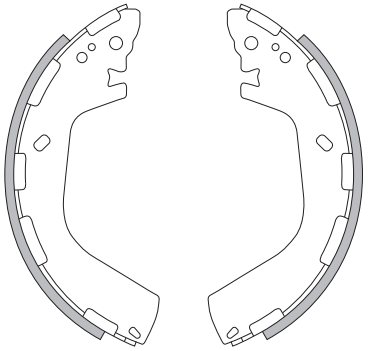

PE/172-CPA Ø 228x42mm

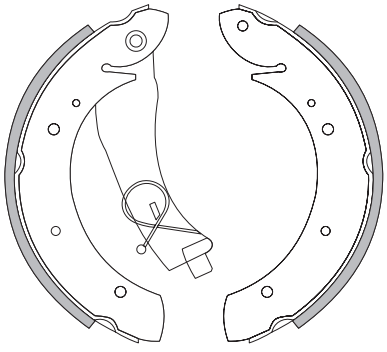

RN/171-CPA Ø 228x42mm

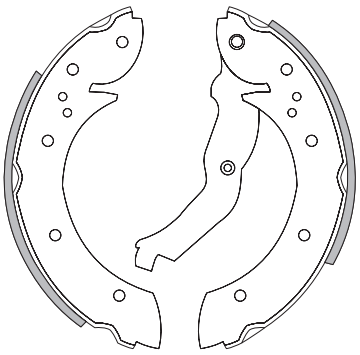

FD/100-CP Ø 228x47mm

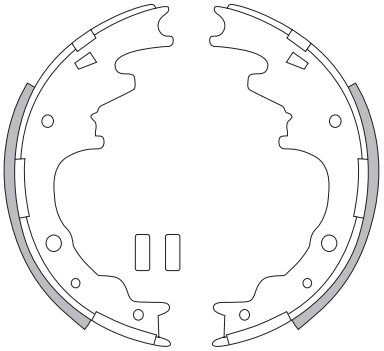

FI/91-CP Ø 228x40mm

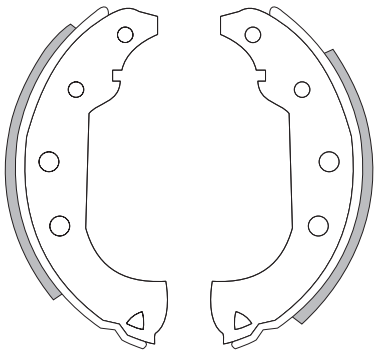

FI/220-CPA Ø 228,6x40mm

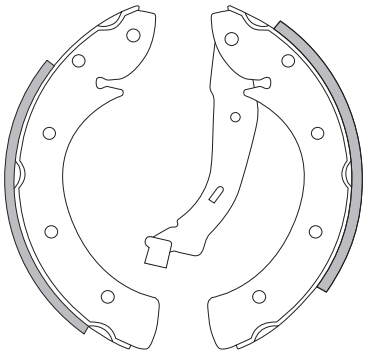

RN/214-CP Ø 229x40mm

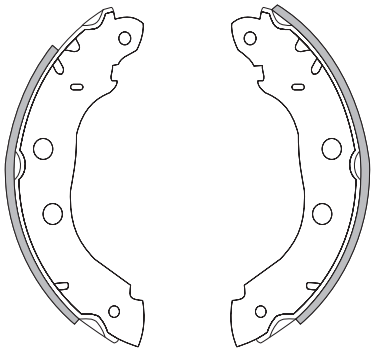

HA/380-CP Ø 228,6x41mm

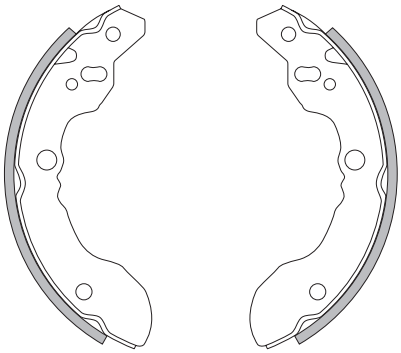

FI/125-CP Ø 228x42mm

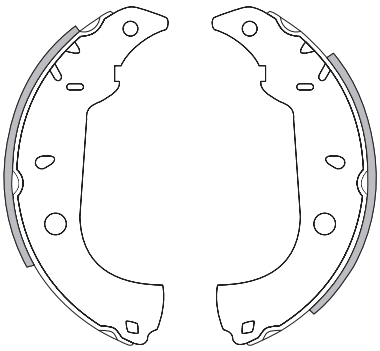

FD/102-CPA Ø 228.6x60mm

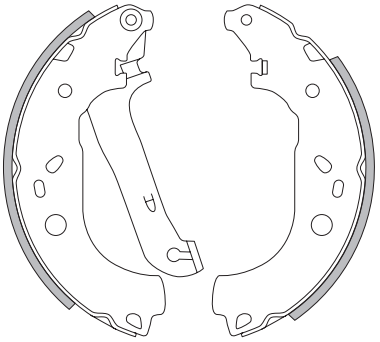

FD/141-CPA Ø 229x44mm

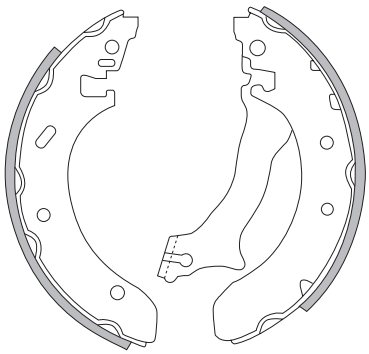

FD/130-CPA Ø 229x45mm

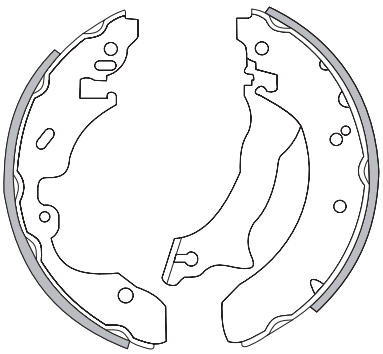

VW/280-CPA Ø 230x32mm

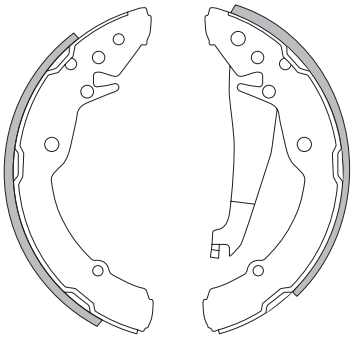

CB/46-CP Ø 230x42mm

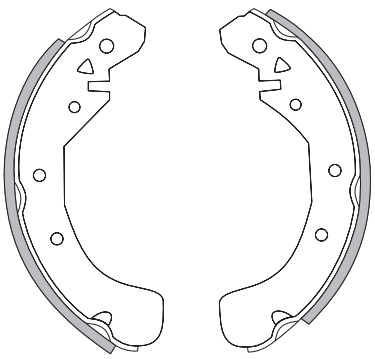

FI/127-CPA Ø 230x42mm

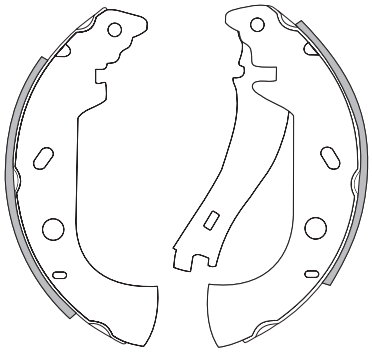

CB/417-CPA Ø 230x47mm

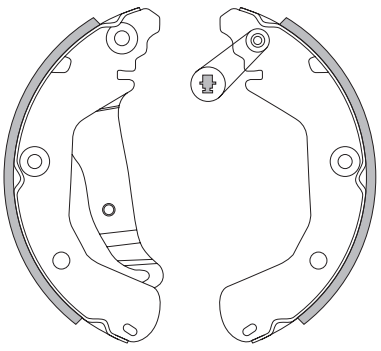

LD/123-CP Ø 250x51mm

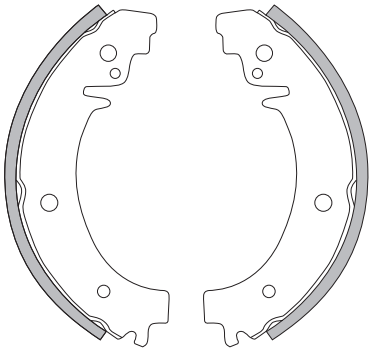

MI/139-CP Ø 254x51mm

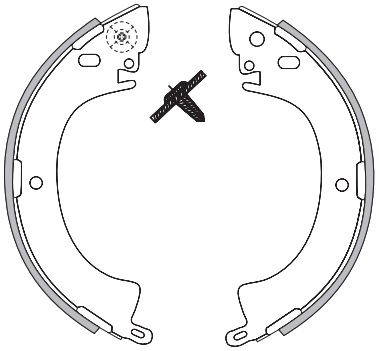

KI/360-CP Ø 254x54mm

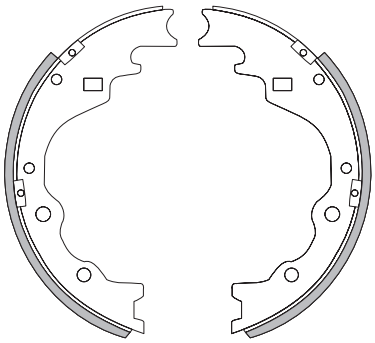

VW/279-CPA Ø 254x56mm

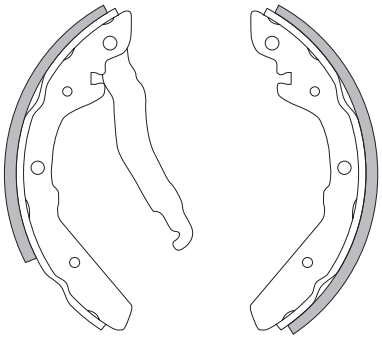

FI/170-CPA Ø 254x57mm

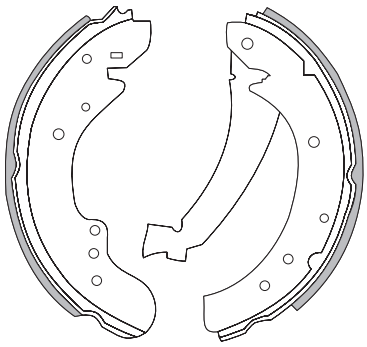

FI/199-CPA Ø 254x57mm

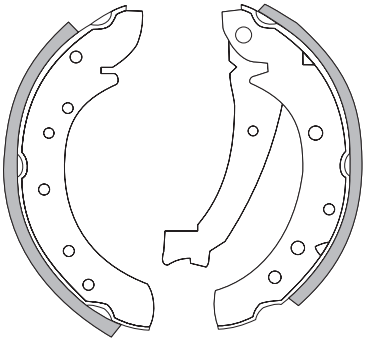

KI/143-CP Ø 254x60mm

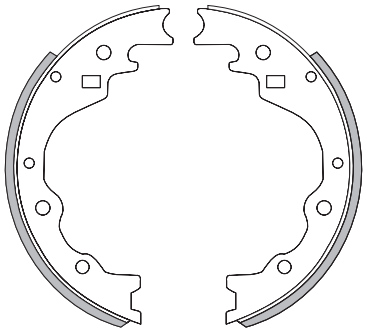

KI/200-CP Ø 254x60mm

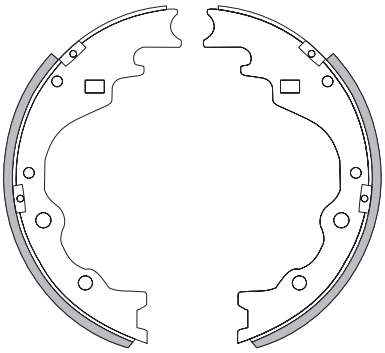

FD/150-CP Ø 254x63mm

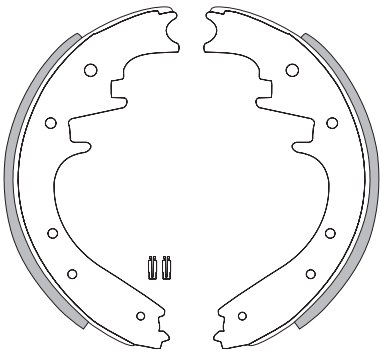

RN/326-CPA Ø 255x46mm

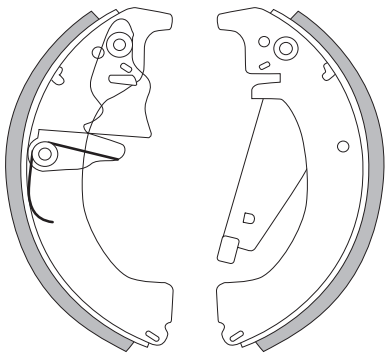

MB/156-CP Ø 255x55mm

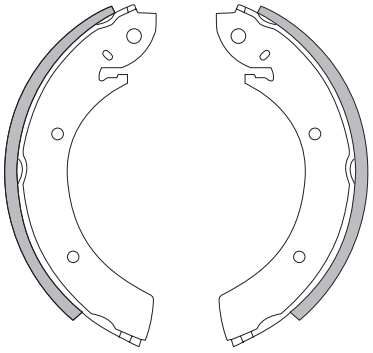

PG/205-CPA Ø 255x61mm

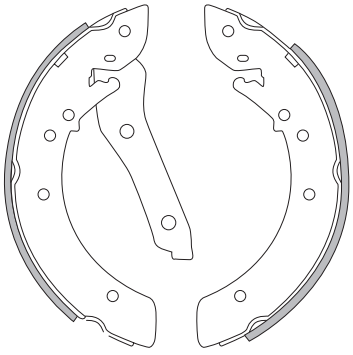

NI/175-CP Ø 260x50mm

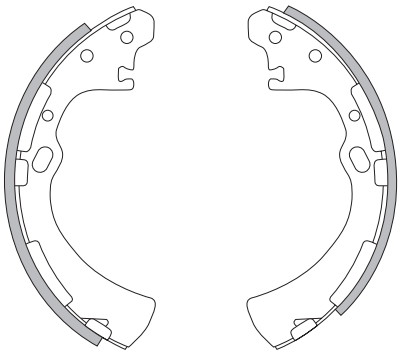

KI/133-CP Ø 260x51mm

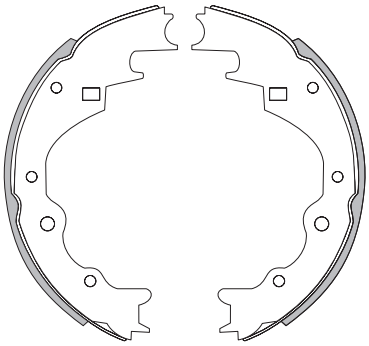

KI/144-CP Ø 260x51mm

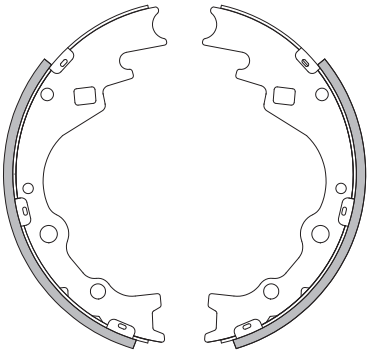

MI/198-CP Ø 270x52mm

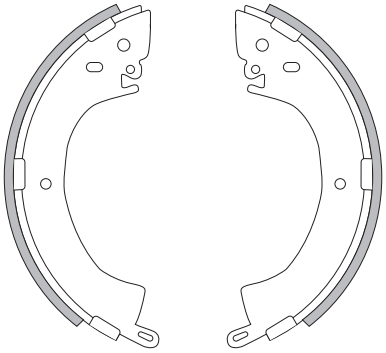

TY/327-CP Ø300x62mm

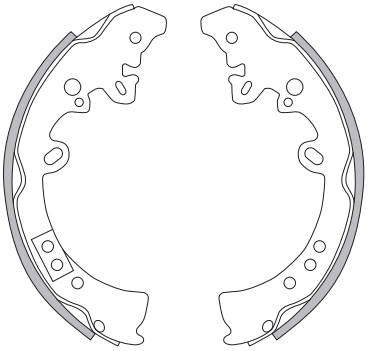

CB/132-CP Ø 279,4x52mm

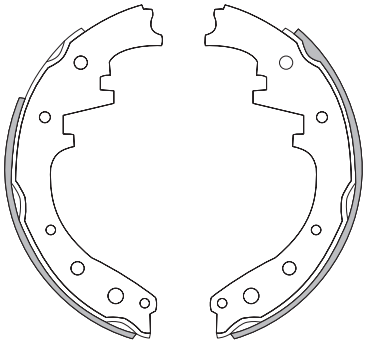

CB/132-CPA Ø 279,4x52mm

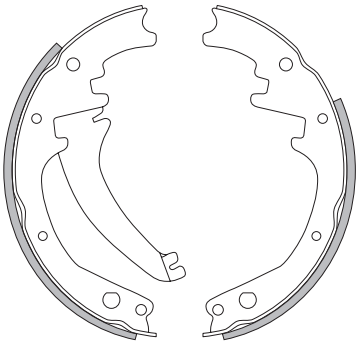

CB/51-CP Ø 279x65mm

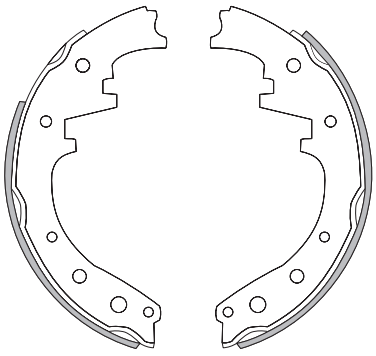

CB/51-CPA Ø 279x65mm

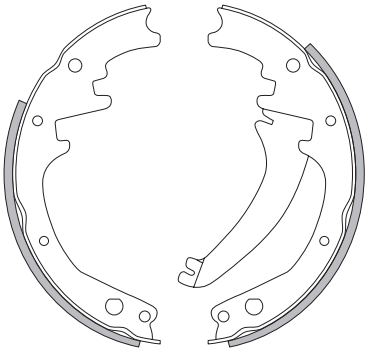

FD/137-CP Ø 280x57mm

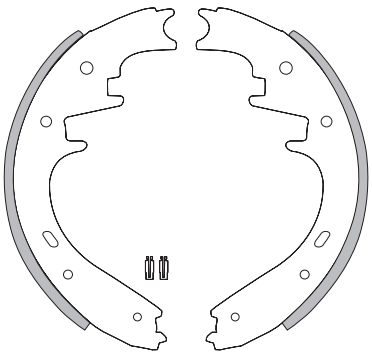

MB/157-CP Ø 280x63mm

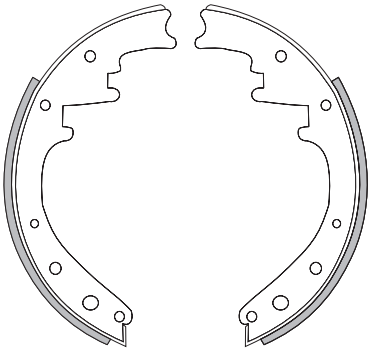

VW/282-CPA Ø 294x56mm

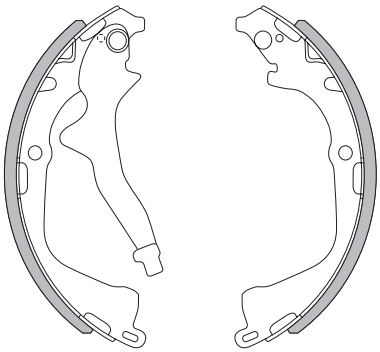

MI/370-CP Ø 295x50mm

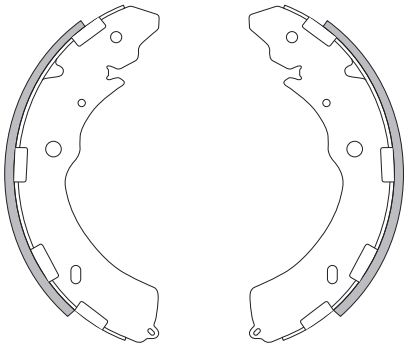

NI/174-CP Ø 295x50mm

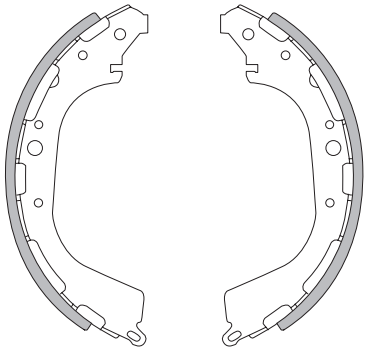

TY/326-CP Ø 295x50mm

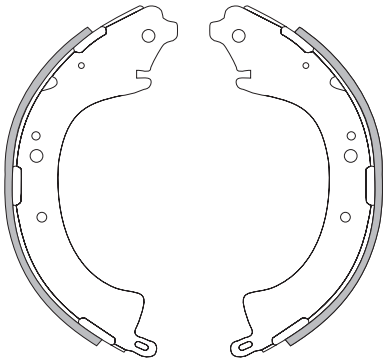

CB/57-CP Ø 330.2x65mm

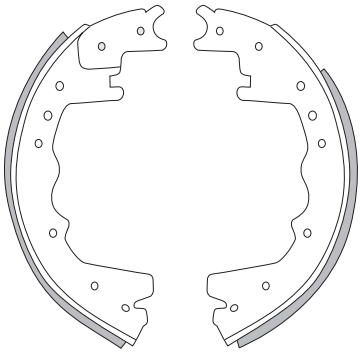

FD/101-CP Ø 330x70.6mm

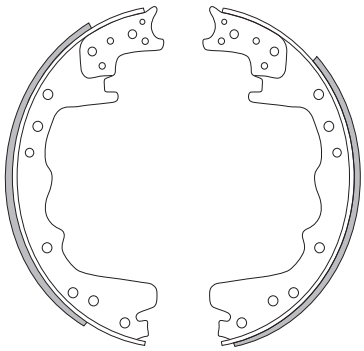

FRAS-LE®

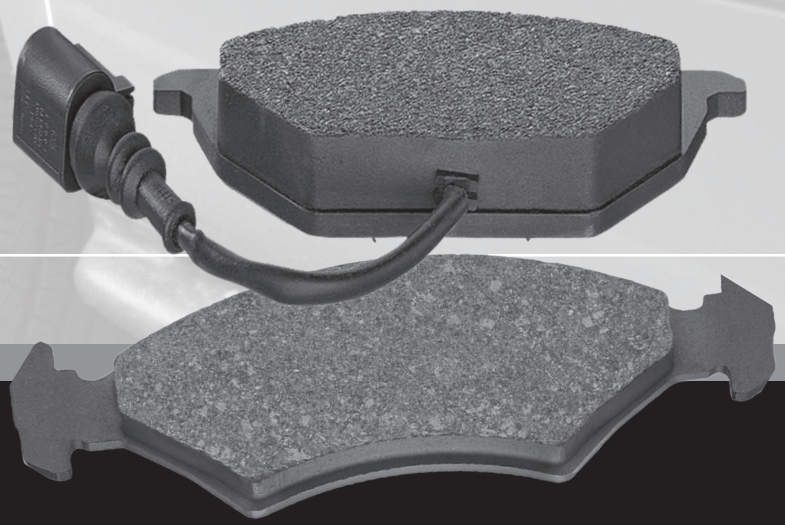

Disc Brake Pads

Pastillas para Frenos a Disco

FRAS-LE	LENGTH LONGITUD	DRAWINGS DIBUJOS
PD/1	76.80	Pag.: 391
PD/5	55.80	Pag.: 390
PD/6	61.80	Pag.: 390
PD/7	78.40	Pag.: 391
PD/8	98.20	Pag.: 396
PD/9	98.20	Pag.: 396
PD/10	108.80	Pag.: 403
PD/11	76.80	Pag.: 391
PD/13	76.80	Pag.: 391
PD/16	61.80	Pag.: 390
PD/17	61.80	Pag.: 390
PD/18	89.70	Pag.: 425
PD/19-C	157.60/182.90	Pag.: 446
PD/22	104.20	Pag.: 399
PD/23	151.30	Pag.: 439
PD/24-A	151.30	Pag.: 437
PD/24-B	151.30	Pag.: 437
PD/24	151.30	Pag.: 437
PD/25-A	151.30	Pag.: 438
PD/25-B	151.30	Pag.: 438
PD/25-RA	151.30	Pag.: 438
PD/25-RA-A	151.30	Pag.: 438
PD/25-RA-B	151.30	Pag.: 438
PD/25-RA-FA	151.30	Pag.: 438
PD/25-RA-FB	151.30	Pag.: 438
PD/25-RA-P	151.30	Pag.: 438
PD/25-RA-R	151.30	Pag.: 438
PD/25	151.30	Pag.: 438
PD/26-A	104.20	Pag.: 399
PD/26	104.20	Pag.: 399
PD/27-A	104.00	Pag.: 399
PD/28	151.30	Pag.: 438
PD/28-B	151.30	Pag.: 438
PD/29	277.80	Pag.: 467
PD/31	83.90	Pag.: 392
PD/32	126.00	Pag.: 415
PD/34	151.30	Pag.: 437
PD/35	131.30	Pag.: 419
PD/36	61.80	Pag.: 390
PD/37	156.30	Pag.: 444
PD/38	61.80	Pag.: 390
PD/39	151.30	Pag.: 439
PD/40	129.90	Pag.: 418
PD/41	61.70	Pag.: 390
PD/42	140.10/141.30	Pag.: 427
PD/43	76.80	Pag.: 391
PD/44-B	156.30	Pag.: 445
PD/44	156.30	Pag.: 445
PD/45	110.00	Pag.: 404
PD/46	131.60	Pag.: 420
PD/47-A	151.30	Pag.: 438
PD/47-RA-P	151.30	Pag.: 438
PD/47	151.30	Pag.: 438
PD/48-A	151.30	Pag.: 439
PD/48	151.30	Pag.: 439
PD/49	87.20	Pag.: 392

FRAS-LE	LENGTH LONGITUD	DRAWINGS DIBUJOS
PD/50	94.90	Pag.: 395
PD/51	151.30	Pag.: 438
PD/52	156.30	Pag.: 444
PD/54	104.20	Pag.: 399
PD/55	140.10/141.30	Pag.: 426
PD/57	160.00/177.60	Pag.: 448
PD/58-B	146.00	Pag.: 432
PD/58	146.00	Pag.: 432
PD/59	87.20	Pag.: 392
PD/60-A	151.30	Pag.: 438
PD/60	151.30	Pag.: 438
PD/61	155.10/156.30	Pag.: 442
PD/62	193.10	Pag.: 462
PD/63	158.70	Pag.: 447
PD/64	154.00	Pag.: 440
PD/65	151.30	Pag.: 437
PD/66-A	155.10/156.30	Pag.: 441
PD/66-B	155.10/156.30	Pag.: 441
PD/66	155.10/156.30	Pag.: 441
PD/67-A	116.50	Pag.: 408
PD/67	116.50	Pag.: 408
PD/68-B	151.30	Pag.: 439
PD/68	151.30	Pag.: 439
PD/69	154.00	Pag.: 439
PD/71	118.00	Pag.: 409
PD/72	155.10/156.30	Pag.: 441
PD/73-B	146.00	Pag.: 432
PD/73	146.00	Pag.: 432
PD/74	123.00	Pag.: 412
PD/75	108.50	Pag.: 402
PD/76	114.40	Pag.: 406
PD/77	156.30	Pag.: 445
PD/78-A	155.10/156.30	Pag.: 441
PD/79	151.30	Pag.: 437
PD/80	150.10/151.30	Pag.: 436
PD/81	151.30	Pag.: 438
PD/82	140.10/141.30	Pag.: 426
PD/84	156.30	Pag.: 444
PD/85	151.50	Pag.: 439
PD/87	151.30	Pag.: 438
PD/88	151.30	Pag.: 439
PD/89	151.30	Pag.: 438
PD/90	151.30	Pag.: 438
PD/91	140.10/141.30	Pag.: 426
PD/92-B	155.10/156.30	Pag.: 441
PD/92	155.10/156.30	Pag.: 441
PD/93	155.10/156.30	Pag.: 441
PD/94	151.50	Pag.: 439
PD/102	139.40	Pag.: 425
PD/103	164.00	Pag.: 449
PD/104-A	175.00	Pag.: 455
PD/104	175.00	Pag.: 455
PD/105	164.00	Pag.: 449
PD/106	164.00	Pag.: 391
PD/107	145.80	Pag.: 432
PD/108	166.60	Pag.: 452

FRAS-LE	LENGTH LONGITUD	DRAWINGS DIBUJOS
PD/109	139.40	Pag.: 425
PD/110	166.90	Pag.: 453
PD/111-A	164.60	Pag.: 451
PD/111	164.60	Pag.: 451
PD/112	249.30	Pag.: 466
PD/113	175.10	Pag.: 455
PD/114	145.70	Pag.: 432
PD/115	119.30	Pag.: 411
PD/116	247.50	Pag.: 466
PD/117-A	175.50	Pag.: 455
PD/117	175.50	Pag.: 455
PD/118-A	125.70	Pag.: 415
PD/118	125.70	Pag.: 415
PD/120	210.70	Pag.: 464
PD/121-A	164.60	Pag.: 451
PD/121	164.60	Pag.: 451
PD/122-A	164.60	Pag.: 451
PD/122	164.60	Pag.: 451
PD/123	175.40	Pag.: 455
PD/124	175.50	Pag.: 455
PD/125 c/30.0	249.50	Pag.: 466
PD/125	249.50	Pag.: 466
PD/126	213.40	Pag.: 464
PD/127	205.00/269.80	Pag.: 463
PD/128	240.50	Pag.: 466
PD/129	249.60	Pag.: 467
PD/130	210.70	Pag.: 464
PD/131	210.50	Pag.: 464
PD/132	91.70	Pag.: 394
PD/133	205.00/265.50	Pag.: 463
PD/134	155.40	Pag.: 443
PD/135	177.20	Pag.: 456
PD/136	130.50	Pag.: 418
PD/137	166.30	Pag.: 452
PD/138	205.40	Pag.: 463
PD/139	174.80	Pag.: 455
PD/140-A	176.00	Pag.: 456
PD/141	247.50	Pag.: 466
PD/142	210.50	Pag.: 464
PD/143	240.00	Pag.: 466
PD/144	240.00	Pag.: 466
PD/145	244.40	Pag.: 466
PD/146	244.40	Pag.: 466
PD/147	210.90	Pag.: 464
PD/148-A	191.00	Pag.: 461
PD/148	191.00	Pag.: 461
PD/150-A	149.00	Pag.: 435
PD/151-A	109.50	Pag.: 404
PD/152	176.00	Pag.: 456
PD/154	175.20	Pag.: 455
PD/155-E	180.00	Pag.: 457
PD/156	193.50	Pag.: 462
PD/159	175.70	Pag.: 455
PD/160	210.00	Pag.: 464
PD/161	204.60	Pag.: 463
PD/163	109.60	Pag.: 404

FRAS-LE	LENGTH LONGITUD	DRAWINGS DIBUJOS
PD/164	210.40	Pag.: 464
PD/166	204.00	Pag.: 463
PD/168-A	204.50	Pag.: 463
PD/169-E	180.00	Pag.: 457
PD/170	247.60	Pag.: 466
PD/172	210.90	Pag.: 464
PD/175	139.50	Pag.: 426
PD/176	139.50	Pag.: 426
PD/177	288.40	Pag.: 467
PD/178	288.30	Pag.: 467
PD/179	235.60	Pag.: 446
PD/185	139.20	Pag.: 425
PD/186	247.60	Pag.: 466
PD/187	249.90	Pag.: 467
PD/188-A	164.60	Pag.: 451
PD/189-A	163.40	Pag.: 449
PD/189	163.40	Pag.: 449
PD/190	141.40	Pag.: 429
PD/191-A	149.00	Pag.: 435
PD/192-A	149.00	Pag.: 435
PD/193-A	191.00	Pag.: 461
PD/194	204.60	Pag.: 463
PD/195	216.00	Pag.: 465
PD/196	249.50	Pag.: 467
PD/197	247.50	Pag.: 466
PD/201	184.00	Pag.: 459
PD/202	216.00	Pag.: 465
PD/204	249.90	Pag.: 467
PD/205	244.30	Pag.: 466
PD/206	207.30	Pag.: 464
PD/207	248.60	Pag.: 466
PD/208	164.50	Pag.: 450
PD/209	210.00	Pag.: 464
PD/213	210.50	Pag.: 464
PD/214	217.85	Pag.: 465
PD/300	116.80	Pag.: 409
PD/301-A	108.80	Pag.: 403
PD/301	108.80	Pag.: 403
PD/302	108.80	Pag.: 403
PD/303-A	105.50	Pag.: 401
PD/304	99.50	Pag.: 397
PD/305-A	100.00	Pag.: 397
PD/305	100.00	Pag.: 397
PD/306	98.20	Pag.: 396
PD/307	77.00	Pag.: 391
PD/308	109.00	Pag.: 403
PD/309	108.80	Pag.: 403
PD/310	108.80	Pag.: 403
PD/311-A	78.40	Pag.: 391
PD/312-A	105.00	Pag.: 400
PD/313	80.70	Pag.: 392
PD/316	63.40	Pag.: 390
PD/317	101.50	Pag.: 397
PD/318-A	155.70	Pag.: 444
PD/319	109.00	Pag.: 403
PD/320	108.80	Pag.: 403

FRAS-LE	LENGTH LONGITUD	DRAWINGS DIBUJOS
PD/321-A	122.90	Pag.: 412
PD/321	122.90	Pag.: 412
PD/322-A	105.20	Pag.: 400
PD/322	154.00	Pag.: 400
PD/324	184.20/197.30	Pag.: 459
PD/325-A	129.90	Pag.: 417
PD/326-A	95.00	Pag.: 395
PD/327	105.00	Pag.: 400
PD/328	137.90	Pag.: 424
PD/329	119.00	Pag.: 410
PD/330	78.80	Pag.: 392
PD/331	154.00	Pag.: 440
PD/332	154.00	Pag.: 440
PD/333	133.30	Pag.: 421
PD/334	87.20	Pag.: 393
PD/335-A	104.00	Pag.: 399
PD/336	119.00	Pag.: 410
PD/337	119.00	Pag.: 410
PD/338-A	100.00	Pag.: 397
PD/338	100.00	Pag.: 397
PD/339-A	174.40	Pag.: 454
PD/340-B	156.30	Pag.: 445
PD/341-A	156.40	Pag.: 445
PD/341	156.40	Pag.: 445
PD/342	168.50	Pag.: 453
PD/343	137.00	Pag.: 422
PD/344	101.50	Pag.: 397
PD/346	136.80	Pag.: 422
PD/347	138.00	Pag.: 424
PD/348	185.10	Pag.: 459
PD/349	150.30	Pag.: 436
PD/350	138.80	Pag.: 425
PD/351	139.30	Pag.: 425
PD/352-A	155.20	Pag.: 442
PD/352	155.20	Pag.: 442
PD/353	148.90	Pag.: 435
PD/354	154.00	Pag.: 440
PD/355	175.00	Pag.: 455
PD/356	194.00	Pag.: 462
PD/357	127.20	Pag.: 416
PD/358-A	144.80	Pag.: 431
PD/358	144.80	Pag.: 431
PD/359-A	109.70	Pag.: 404
PD/360-A	149.00	Pag.: 435
PD/361-A	89.50	Pag.: 393
PD/362	87.20	Pag.: 392
PD/363-A	89.80	Pag.: 394
PD/364-A	140.10/141.30	Pag.: 427
PD/365	154.20	Pag.: 440
PD/366	166.20	Pag.: 452
PD/367	141.80	Pag.: 429
PD/368	141.80	Pag.: 429
PD/369-B	144.80	Pag.: 431
PD/370	320.50	Pag.: 467
PD/371	443.70	Pag.: 467
PD/372	413.00	Pag.: 467

FRAS-LE	LENGTH LONGITUD	DRAWINGS DIBUJOS
PD/373	277.00	Pag.: 467
PD/374	160.20/172.00	Pag.: 448
PD/376	91.50	Pag.: 467
PD/377	128.00	Pag.: 417
PD/378	103.50	Pag.: 398
PD/379	107.40	Pag.: 401
PD/380	114.90	Pag.: 406
PD/382	127.50	Pag.: 416
PD/383	149.70	Pag.: 435
PD/384-A	156.30	Pag.: 445
PD/384	156.30	Pag.: 445
PD/385	151.50	Pag.: 439
PD/386	127.80	Pag.: 416
PD/387	133.20	Pag.: 421
PD/388	137.70	Pag.: 424
PD/389	124.00	Pag.: 414
PD/390	151.30	Pag.: 437
PD/391-A	129.90	Pag.: 418
PD/391	129.90	Pag.: 418
PD/392	133.50	Pag.: 421
PD/393	108.50	Pag.: 403
PD/394	129.20	Pag.: 417
PD/395	165.20	Pag.: 452
PD/396	164.50/165.20	Pag.: 450
PD/397	138.00	Pag.: 424
PD/398	88.90	Pag.: 393
PD/399	125.80	Pag.: 415
PD/400-A	95.50	Pag.: 396
PD/401	85.50	Pag.: 392
PD/402-A	115.80	Pag.: 407
PD/403-B	156.30	Pag.: 445
PD/404	131.50	Pag.: 420
PD/405-E	130.00	Pag.: 418
PD/406-B	129.80	Pag.: 417
PD/406	129.80	Pag.: 417
PD/407	95.00	Pag.: 395
PD/409	118.00	Pag.: 409
PD/410	140.10	Pag.: 426
PD/411-E	130.00	Pag.: 418
PD/411	130.00	Pag.: 418
PD/412-B	131.00	Pag.: 419
PD/413	118.70	Pag.: 410
PD/414-E	130.00	Pag.: 418
PD/415	110.20	Pag.: 404
PD/416	88.30	Pag.: 393
PD/417-A	156.50	Pag.: 445
PD/417	156.50	Pag.: 445
PD/418	177.00	Pag.: 456
PD/419	116.70	Pag.: 408
PD/420-A	174.50	Pag.: 455
PD/420	174.50	Pag.: 454
PD/421	108.50	Pag.: 402
PD/422-A	159.90	Pag.: 447
PD/422	159.90	Pag.: 447
PD/423	127.60	Pag.: 416
PD/424	99.90	Pag.: 397

FRAS-LE	LENGTH LONGITUD	DRAWINGS DIBUJOS
PD/425-A	63.80	Pag.: 390
PD/426	119.90	Pag.: 411
PD/427	161.00	Pag.: 448
PD/428	130.00	Pag.: 418
PD/429	142.60	Pag.: 430
PD/430	87.00	Pag.: 392
PD/431	100.00	Pag.: 397
PD/432	110.20	Pag.: 404
PD/433-B	151.30	Pag.: 439
PD/435	131.00	Pag.: 419
PD/436	183.00	Pag.: 458
PD/437	113.50	Pag.: 406
PD/438-B	159.90	Pag.: 447
PD/439	87.40	Pag.: 393
PD/440	115.00	Pag.: 407
PD/441	110.40	Pag.: 405
PD/442	177.80	Pag.: 457
PD/443	118.70	Pag.: 410
PD/444	88.90	Pag.: 393
PD/445	137.80	Pag.: 424
PD/446	145.00	Pag.: 432
PD/447	109.40	Pag.: 404
PD/448-A	139.50	Pag.: 426
PD/449	148.90	Pag.: 435
PD/450	108.00	Pag.: 402
PD/451	89.60	Pag.: 393
PD/452	114.00	Pag.: 406
PD/453	137.20	Pag.: 423
PD/454-E	131.00	Pag.: 419
PD/455	102.40	Pag.: 398
PD/457	88.70	Pag.: 393
PD/458-B	104.90	Pag.: 400
PD/463-B	129.20	Pag.: 417
PD/464-B	88.50	Pag.: 393
PD/465	105.00	Pag.: 400
PD/466	118.90	Pag.: 410
PD/467	118.90	Pag.: 410
PD/468-A	68.30	Pag.: 391
PD/469	127.70	Pag.: 416
PD/470	113.80	Pag.: 406
PD/471-A	169.50	Pag.: 453
PD/472	138.80	Pag.: 425
PD/473	129.80	Pag.: 417
PD/474	126.80	Pag.: 416
PD/475	143.00	Pag.: 431
PD/477	104.80	Pag.: 399
PD/478	104.80	Pag.: 399
PD/479	134.30	Pag.: 421
PD/480	87.00	Pag.: 392
PD/481-A	156.30	Pag.: 445
PD/482	126.00	Pag.: 415
PD/483-A	130.00	Pag.: 418
PD/484-A	130.00	Pag.: 418
PD/485	191.70	Pag.: 461
PD/486	149.20	Pag.: 435
PD/487	91.50	Pag.: 394

FRAS-LE	LENGTH LONGITUD	DRAWINGS DIBUJOS
PD/488	123.00	Pag.: 412
PD/489	109.50	Pag.: 404
PD/490	54.00	Pag.: 390
PD/491	131.70	Pag.: 420
PD/492	164.50/165.20	Pag.: 450
PD/493	136.30	Pag.: 422
PD/494	150.10/151.30	Pag.: 436
PD/495	137.90	Pag.: 424
PD/496	112.20	Pag.: 405
PD/497	150.10/151.30	Pag.: 436
PD/498-A	140.50	Pag.: 428
PD/499	126.30/147.90	Pag.: 416
PD/500	151.00	Pag.: 437
PD/501	109.50	Pag.: 404
PD/502	126.00/147.80	Pag.: 416
PD/503	150.30/151.30	Pag.: 436
PD/504	164.30/172.80	Pag.: 450
PD/505	137.10	Pag.: 423
PD/506	147.50/190.40	Pag.: 433
PD/507	131.10	Pag.: 419
PD/508	147.90/190.40	Pag.: 434
PD/509-A	123.00	Pag.: 412
PD/509-B	123.00	Pag.: 412
PD/510	164.50/165.20	Pag.: 450
PD/511-B	137.00	Pag.: 423
PD/511	137.00	Pag.: 423
PD/512	95.70	Pag.: 396
PD/513	160.20/172.00	Pag.: 448
PD/514	129.00	Pag.: 417
PD/515	164.50/165.20	Pag.: 451
PD/516	115.80	Pag.: 407
PD/517	123.60/152.40	Pag.: 413
PD/518	95.00	Pag.: 395
PD/519	140.50	Pag.: 428
PD/520	131.40	Pag.: 420
PD/521-E	100.10	Pag.: 397
PD/522-E	105.20	Pag.: 400
PD/523	157.60/182.90	Pag.: 446
PD/524	237.50	Pag.: 466
PD/525-A	156.30	Pag.: 445
PD/526	173.80/185.00	Pag.: 454
PD/527	119.30	Pag.: 410
PD/528	134.50	Pag.: 421
PD/529	249.40	Pag.: 467
PD/530	156.70	Pag.: 446
PD/531	124.30	Pag.: 414
PD/532	108.50	Pag.: 403
PD/533	173.80/185.00	Pag.: 454
PD/534	164.50	Pag.: 450
PD/535	104.90	Pag.: 400
PD/536	164.50	Pag.: 450
PD/537	165.30/179.50	Pag.: 452
PD/538	139.20	Pag.: 425
PD/539	191.70	Pag.: 461
PD/540	126.00/152.40	Pag.: 416
PD/541	182.80/206.70	Pag.: 458

FRAS-LE	LENGTH LONGITUD	DRAWINGS DIBUJOS
PD/542	164.30	Pag.: 450
PD/543	151.10	Pag.: 437
PD/544	108.50	Pag.: 402
PD/545	165.30/179.50	Pag.: 452
PD/546	125.70/142.20	Pag.: 415
PD/547	125.70/147.00	Pag.: 415
PD/548	124.40/147.30	Pag.: 414
PD/549	127.30	Pag.: 416
PD/550	137.20	Pag.: 423
PD/551	125.70/147.00	Pag.: 415
PD/552	125.70/147.00	Pag.: 415
PD/553	164.80	Pag.: 451
PD/554	88.80	Pag.: 393
PD/555	188.10	Pag.: 460
PD/556	143.00	Pag.: 430
PD/557	204.90/265.50	Pag.: 463
PD/558	102.20	Pag.: 398
PD/559	220.30	Pag.: 465
PD/560	140.30	Pag.: 427
PD/561	158.80	Pag.: 447
PD/562	158.80	Pag.: 447
PD/563	137.50	Pag.: 423
PD/564	147.60	Pag.: 433
PD/565	188.50	Pag.: 460
PD/566	142.30	Pag.: 430
PD/567	161.20	Pag.: 448
PD/568	159.20/220.00	Pag.: 447
PD/569	188.40	Pag.: 460
PD/570	221.50	Pag.: 465
PD/571	216.00	Pag.: 464
PD/572	177.50	Pag.: 457
PD/573	139.10/141.10	Pag.: 425
PD/574	143.00	Pag.: 431
PD/575	164.30	Pag.: 450
PD/576	220.00	Pag.: 465
PD/577	153.90	Pag.: 439
PD/578	183.60	Pag.: 458
PD/580	146.40	Pag.: 433
PD/581	172.60	Pag.: 454
PD/582	155.50	Pag.: 444
PD/583	188.50	Pag.: 460
PD/584	166.20	Pag.: 452
PD/585	105.50	Pag.: 401
PD/586	148.70	Pag.: 434
PD/587	221.50	Pag.: 465
PD/588	140.50	Pag.: 428
PD/589	172.70	Pag.: 454
PD/590	175.80	Pag.: 455
PD/591	158.30/158.70	Pag.: 447
PD/592-B	116.10	Pag.: 407
PD/592	116.10	Pag.: 407
PD/593	118.60	Pag.: 410
PD/594	184.20	Pag.: 459
PD/595	124.10	Pag.: 414
PD/596	82.00	Pag.: 392
PD/597	168.50	Pag.: 453

FRAS-LE	LENGTH LONGITUD	DRAWINGS DIBUJOS
PD/598	127.00	Pag.: 416
PD/599	115.80	Pag.: 407
PD/600	95.50	Pag.: 396
PD/601	136.80	Pag.: 422
PD/602	119.00	Pag.: 410
PD/603	119.60	Pag.: 411
PD/604	104.70	Pag.: 399
PD/605	160.00/169.60	Pag.: 447
PD/606	182.90/197.40	Pag.: 458
PD/607	116.20	Pag.: 407
PD/608	191.70	Pag.: 461
PD/609	147.60/212.20	Pag.: 434
PD/610	131.60	Pag.: 420
PD/611	111.30	Pag.: 405
PD/612	126.80/128.30	Pag.: 416
PD/613	138.00	Pag.: 424
PD/614	137.90	Pag.: 424
PD/615	142.60	Pag.: 430
PD/616	78.80	Pag.: 391
PD/617	125.10	Pag.: 415
PD/618	165.00	Pag.: 452
PD/619	108.40	Pag.: 402
PD/620	192.30/194.40	Pag.: 462
PD/621	122.70	Pag.: 411
PD/622	188.30	Pag.: 460
PD/623	191.70	Pag.: 461
PD/624	206.00	Pag.: 463
PD/625	206.10	Pag.: 464
PD/626	210.20	Pag.: 464
PD/627	219.50	Pag.: 465
PD/628	123.10	Pag.: 412
PD/629	78.60	Pag.: 391
PD/630	149.00	Pag.: 435
PD/631	144.90	Pag.: 431
PD/632	91.10/111.50	Pag.: 394
PD/633	116.20	Pag.: 407
PD/634	155.00	Pag.: 440
PD/635	131.60	Pag.: 420
PD/636	116.60	Pag.: 408
PD/637	219.80	Pag.: 465
PD/638	135.50	Pag.: 422
PD/639	218.00	Pag.: 465
PD/640	221.50	Pag.: 465
PD/641	177.40	Pag.: 457
PD/642	177.30	Pag.: 456
PD/643	177.30	Pag.: 457
PD/644	141.70	Pag.: 429
PD/645	88.80	Pag.: 393
PD/646	110.60	Pag.: 405
PD/647	136.50	Pag.: 422
PD/648	122.70	Pag.: 411
PD/649-E	148.80	Pag.: 434
PD/650-E	168.80	Pag.: 453
PD/651	73.00	Pag.: 391
PD/652-B	164.70	Pag.: 451
PD/652	164.70	Pag.: 451

FRAS-LE	LENGTH LONGITUD	DRAWINGS DIBUJOS
PD/653	228.30	Pag.: 465
PD/654	219.60/235.60	Pag.: 465
PD/655	183.00/237.70	Pag.: 458
PD/656	177.20	Pag.: 456
PD/657-A	63.70	Pag.: 390
PD/659-A	141.40	Pag.: 429
PD/660	108.50	Pag.: 403
PD/661	169.20	Pag.: 453
PD/662	163.10	Pag.: 449
PD/663	137.00	Pag.: 423
PD/664	164.90	Pag.: 451
PD/665	165.00	Pag.: 451
PD/666	85.20	Pag.: 392
PD/667	148.90	Pag.: 435
PD/668	118.20	Pag.: 409
PD/669	137.10	Pag.: 423
PD/672	144.50	Pag.: 431
PD/673-B	150.80	Pag.: 437
PD/674	147.60	Pag.: 433
PD/675	150.00	Pag.: 435
PD/676	155.10/156.30	Pag.: 441
PD/677	108.00	Pag.: 402
PD/678	124.10	Pag.: 414
PD/679	142.70/199.50	Pag.: 430
PD/680	119.60	Pag.: 411
PD/681	104.40	Pag.: 399
PD/682	107.50	Pag.: 401
PD/683	107.60	Pag.: 402
PD/684	85.20	Pag.: 392
PD/685	150.30/151.50	Pag.: 437
PD/686	140.90	Pag.: 428
PD/687	127.90	Pag.: 416
PD/688	108.00	Pag.: 402
PD/689	102.50	Pag.: 398
PD/690	88.80	Pag.: 393
PD/691	105.40	Pag.: 401
PD/692	105.40	Pag.: 401
PD/693	109.50	Pag.: 404
PD/694	136.60	Pag.: 422
PD/695	116.30	Pag.: 407
PD/696	94.70	Pag.: 395
PD/697	147.50/213.20	Pag.: 433
PD/698	90.10	Pag.: 394
PD/699	90.10	Pag.: 394
PD/700	137.50	Pag.: 424
PD/701	133.60	Pag.: 421
PD/702	144.50	Pag.: 431
PD/703	106.00	Pag.: 401
PD/704	141.10	Pag.: 429
PD/705	141.10	Pag.: 428
PD/706	137.00	Pag.: 423
PD/707	117.00	Pag.: 409
PD/708	177.00	Pag.: 456
PD/709	108.00	Pag.: 402
PD/710	113.80	Pag.: 406
PD/711	149.10	Pag.: 435

FRAS-LE	LENGTH LONGITUD	DRAWINGS DIBUJOS
PD/712	116.80	Pag.: 409
PD/713	182.60	Pag.: 457
PD/714	161.20	Pag.: 448
PD/715	110.70	Pag.: 405
PD/716	123.30	Pag.: 413
PD/717	138.00	Pag.: 424
PD/719	148.80	Pag.: 434
PD/720	143.00	Pag.: 431
PD/721	139.10	Pag.: 425
PD/722	183.50	Pag.: 458
PD/723	105.90	Pag.: 401
PD/724	119.30	Pag.: 411
PD/725	99.00	Pag.: 397
PD/726	112.80	Pag.: 406
PD/727	137.50	Pag.: 423
PD/728	137.50	Pag.: 423
PD/729	155.20/156.50	Pag.: 443
PD/730	99.50	Pag.: 397
PD/731	142.70	Pag.: 430
PD/732	146.70	Pag.: 433
PD/733	144.30	Pag.: 431
PD/734	144.90	Pag.: 432
PD/735	109.00	Pag.: 404
PD/736	140.60	Pag.: 428
PD/737	177.00	Pag.: 456
PD/738	137.80	Pag.: 424
PD/739	93.00	Pag.: 394
PD/740	139.20	Pag.: 425
PD/741	105.40	Pag.: 401
PD/742	114.20	Pag.: 406
PD/743	143.30	Pag.: 431
PD/744	146.60	Pag.: 433
PD/745	131.70	Pag.: 420
PD/746	216.00	Pag.: 465
PD/747	182.60	Pag.: 457
PD/748	123.20	Pag.: 413
PD/749	137.10	Pag.: 423
PD/750	210.30	Pag.: 464
PD/751	139.40/141.40	Pag.: 425
PD/752	137.00	Pag.: 423
PD/753	96.80	Pag.: 396
PD/754	139.70	Pag.: 426
PD/755	157.70	Pag.: 446
PD/756	124.80	Pag.: 414
PD/757	189.20	Pag.: 461
PD/758	189.20	Pag.: 461
PD/759	166.30	Pag.: 452
PD/760	183.60	Pag.: 458
PD/761	123.70/152.40	Pag.: 414
PD/762	101.80	Pag.: 398
PD/763	185.00	Pag.: 459
PD/764	141.00	Pag.: 428
PD/765	116.10	Pag.: 407
PD/766	113.80	Pag.: 406
PD/767	155.40/156.60	Pag.: 444
PD/768	101.90	Pag.: 398

FRAS-LE	LENGTH LONGITUD	DRAWINGS DIBUJOS
PD/769	147.60	Pag.: 433
PD/770	185.40	Pag.: 459
PD/771	155.70	Pag.: 444
PD/772	161.20	Pag.: 448
PD/773	119.30	Pag.: 410
PD/774	183.80/197.80	Pag.: 459
PD/775	140.90	Pag.: 428
PD/776	166.90	Pag.: 452
PD/777	220.30	Pag.: 465
PD/778	107.70	Pag.: 402
PD/779	176.00	Pag.: 455
PD/780	155.50	Pag.: 444
PD/781	139.00	Pag.: 425
PD/782	129.00	Pag.: 417
PD/783	156.40	Pag.: 445
PD/784	143.90	Pag.: 431
PD/785	142.00	Pag.: 429
PD/786	155.00/156.30	Pag.: 440
PD/787	123.10	Pag.: 412
PD/788	117.50	Pag.: 409
PD/789	116.40	Pag.: 408
PD/790	138.80	Pag.: 424
PD/791	129.00	Pag.: 417
PD/792	122.60	Pag.: 411
PD/793	112.50	Pag.: 405
PD/794	118.40	Pag.: 410
PD/796	123.10	Pag.: 412
PD/797	140.20	Pag.: 427
PD/798	109.00	Pag.: 404
PD/799	147.70	Pag.: 434
PD/800	177.30	Pag.: 456
PD/801	167.40	Pag.: 453
PD/802	142.60	Pag.: 430
PD/803	170.40/172.20	Pag.: 454
PD/804	146.00	Pag.: 433
PD/805	150.60	Pag.: 437
PD/806	101.30	Pag.: 397
PD/807	176.00	Pag.: 456
PD/808	177.70	Pag.: 457
PD/809	155.00	Pag.: 440
PD/810	124.70	Pag.: 414
PD/811	163.60	Pag.: 449
PD/812	123.00	Pag.: 412
PD/813	110.40	Pag.: 405
PD/814	163.00	Pag.: 449
PD/815	118.60	Pag.: 410
PD/816	136.50	Pag.: 422
PD/817	143.00	Pag.: 431
PD/818	133.10	Pag.: 421
PD/819	123.20	Pag.: 413
PD/1000-B	155.20/156.50	Pag.: 443
PD/1000	155.20/156.50	Pag.: 443
PD/1001	183.30/197.40	Pag.: 458
PD/1002	116.20	Pag.: 407
PD/1003	156.50	Pag.: 445
PD/1004	183.20/238.20	Pag.: 458

FRAS-LE	LENGTH LONGITUD	DRAWINGS DIBUJOS
PD/1005	108.50	Pag.: 403
PD/1006	177.20	Pag.: 456
PD/1007-A	188.00	Pag.: 460
PD/1008	163.20	Pag.: 449
PD/1009	117.80	Pag.: 409
PD/1010	69.10	Pag.: 391
PD/1011	131.10	Pag.: 419
PD/1012-B	140.20	Pag.: 427
PD/1013	63.80	Pag.: 390
PD/1014	157.20	Pag.: 446
PD/1015	172.70	Pag.: 454
PD/1016	95.50	Pag.: 396
PD/1017	109.70	Pag.: 404
PD/1018	150.10	Pag.: 436
PD/1019	176.00	Pag.: 455
PD/1020	183.30	Pag.: 458
PD/1021	101.90	Pag.: 398
PD/1022	101.90	Pag.: 398
PD/1023	195.30	Pag.: 463
PD/1024	178.30	Pag.: 457
PD/1025	105.40	Pag.: 400
PD/1026	146.60	Pag.: 433
PD/1028-B	165.00	Pag.: 452
PD/1028	165.00	Pag.: 452
PD/1029-A	122.80	Pag.: 412
PD/1030	105.30	Pag.: 400
PD/1031	116.10	Pag.: 407
PD/1032	167.90	Pag.: 453
PD/1033	188.00	Pag.: 459
PD/1034	144.50	Pag.: 431
PD/1035	119.60	Pag.: 411
PD/1036	114.80	Pag.: 406
PD/1037	99.00	Pag.: 396
PD/1038	123.20	Pag.: 413
PD/1039	108.60	Pag.: 403
PD/1040	188.00	Pag.: 459
PD/1041	102.10	Pag.: 398
PD/1042-A	156.50	Pag.: 446
PD/1043	151.40	Pag.: 439
PD/1044	155.20/156.50	Pag.: 443
PD/1045	94.70	Pag.: 395
PD/1046	63.50	Pag.: 390
PD/1047	148.10	Pag.: 434
PD/1048	107.60	Pag.: 402
PD/1049	131.60	Pag.: 420
PD/1050	63.50	Pag.: 390
PD/1051	122.70/123.80	Pag.: 412
PD/1052	135.40	Pag.: 422
PD/1053	130.00	Pag.: 418
PD/1054	87.10	Pag.: 392
PD/1055-A	63.50/77.70	Pag.: 390
PD/1056	74.80	Pag.: 391
PD/1057	188.50	Pag.: 460
PD/1058	140.40	Pag.: 427
PD/1059	123.20	Pag.: 413
PD/1060	76.70	Pag.: 391

FRAS-LE	LENGTH LONGITUD	DRAWINGS DIBUJOS
PD/1061	123.20	Pag.: 413
PD/1062	123.20	Pag.: 413
PD/1063	155.20/156.50	Pag.: 443
PD/1064	190.20	Pag.: 461
PD/1065	120.90	Pag.: 411
PD/1066	166.40	Pag.: 452
PD/1067	157.20	Pag.: 446
PD/1068	112.80	Pag.: 405
PD/1069	162.60	Pag.: 449
PD/1070	116.60	Pag.: 408
PD/1071	110.50	Pag.: 405
PD/1072	110.70	Pag.: 405
PD/1073	113.00	Pag.: 406
PD/1074	134.60	Pag.: 422
PD/1075	145.00	Pag.: 432
PD/1076	110.50	Pag.: 405
PD/1077	124.20	Pag.: 414
PD/1078	157.70	Pag.: 446
PD/1079	190.20	Pag.: 461
PD/1080	138.90	Pag.: 425
PD/1081	110.70	Pag.: 405
PD/1082	116.60	Pag.: 408
PD/1083	234.20/235.50	Pag.: 465
PD/1084	143.80	Pag.: 431
PD/1085	116.30	Pag.: 408
PD/1086	214.40	Pag.: 464
PD/1087	202.20	Pag.: 463
PD/1088	93.50	Pag.: 395
PD/1089	143.50	Pag.: 431
PD/1090	116.60	Pag.: 408
PD/1091-A	165.00	Pag.: 452
PD/1092	130.00	Pag.: 418
PD/1093	93.10	Pag.: 394
PD/1094-A	164.90	Pag.: 451
PD/1095-A	101.90	Pag.: 398
PD/1096	130.80	Pag.: 419
PD/1097	125.60	Pag.: 415
PD/1098	143.50	Pag.: 431
PD/1099-B	168.80	Pag.: 453
PD/1100	141.80	Pag.: 429
PD/1101	148.30	Pag.: 434
PD/1102	116.80	Pag.: 409
PD/1103	155.40/156.60	Pag.: 444
PD/1131	107.90	Pag.: 402
PD/1232-B	155.10/156.40	Pag.: 442
PD/1277	131.40	Pag.: 419
PD/1279	129.80	Pag.: 417
PD/1287	156.80	Pag.: 446
PD/1288	131.70	Pag.: 420
PD/1296	137.80	Pag.: 424
PD/1298	155.10	Pag.: 440
PD/1299	110.60	Pag.: 405
PD/1301	155.20	Pag.: 443
PD/1302	131.40	Pag.: 419
PD/1303	95.30	Pag.: 395
PD/1304	99.90	Pag.: 397

FRAS-LE	LENGTH LONGITUD	DRAWINGS DIBUJOS
PD/1320	98.50	Pag.: 396
PD/1330	106.30	Pag.: 401
PD/1331	95.60	Pag.: 396
PD/1332	95.20	Pag.: 395
PD/1333	95.50	Pag.: 395
PD/1334	93.20	Pag.: 394
PD/1335	94.80	Pag.: 395
PD/1337	123.20	Pag.: 413
PD/1338	102.30	Pag.: 398
PD/1339	116.50	Pag.: 429
PD/1341	118.30	Pag.: 410
PD/1342	151.50	Pag.: 439
PD/1343	132.80	Pag.: 421
PD/1344	131.50	Pag.: 420
PD/1345-E	162.30	Pag.: 448
PD/1346	146.00	Pag.: 432
PD/1347	142.30	Pag.: 430
PD/1348	133.00	Pag.: 421
PD/1350	116.80	Pag.: 409
PD/1351	123.80	Pag.: 414
PD/1352	156.80	Pag.: 446
PD/1353	145.00	Pag.: 432
PD/1354	193.30/194.60	Pag.: 462
PD/1355	90.10	Pag.: 394
PD/1356	99.90	Pag.: 397
PD/1357	140.20/141.50	Pag.: 427
PD/1358	145.50	Pag.: 432
PD/1359	164.60	Pag.: 451
PD/1364	133.00	Pag.: 421
PD/1365	138.50	Pag.: 424
PD/1366	116.80	Pag.: 409
PD/1367	177.80	Pag.: 457
PD/1368	99.80	Pag.: 397
PD/1369	116.00	Pag.: 407
PD/1370	155.00/155.20	Pag.: 440
PD/1371	136.80	Pag.: 422
PD/1372	84.90	Pag.: 392
PD/1373	108.30	Pag.: 402
PD/1374	193.00/193.20	Pag.: 462
PD/1376	155.10/156.40	Pag.: 442
PD/1377	155.20	Pag.: 442
PD/1378	150.10/151.50	Pag.: 436
PD/1379	129.70	Pag.: 417
PD/1380	104.70	Pag.: 399
PD/1381	162.60	Pag.: 449
PD/1382	162.60	Pag.: 449
PD/1383	112.80	Pag.: 406
PD/1384	126.80	Pag.: 416
PD/1385	130.80	Pag.: 419
PD/1386	116.60	Pag.: 408
PD/1387	144.90	Pag.: 432
PD/1388	148.80	Pag.: 434
PD/1389	195.20	Pag.: 463
PD/1390	169.70	Pag.: 454
PD/1391	102.70/108.00	Pag.: 398
PD/1392	102.90/108.00	Pag.: 398

FRAS-LE	LENGTH LONGITUD	DRAWINGS DIBUJOS
PD/1393	155.00	Pag.: 440
PD/1394	140.00	Pag.: 426
PD/1395	95.60	Pag.: 396
PD/1396	101.90	Pag.: 398
PD/1397-B	169.10	Pag.: 453
PD/1398	155.40	Pag.: 444
PD/1399	141.40	Pag.: 429
PD/1400	159.00	Pag.: 447
PD/1401	95.30	Pag.: 395
PD/1402	112.80	Pag.: 405
PD/1403	95.70	Pag.: 396
PD/1404	137.50	Pag.: 423
PD/1405-A	163.10	Pag.: 449
PD/1406	157.70	Pag.: 446
PD/1407	113.20	Pag.: 406
PD/1408	183.10	Pag.: 458
PD/1409	132.80	Pag.: 420
PD/1410	130.00	Pag.: 418
PD/1411	178.00	Pag.: 457
PD/1412	148.80	Pag.: 434
PD/1413	148.60	Pag.: 434
PD/1414	180.00	Pag.: 457
PD/1415	116.60	Pag.: 408
PD/1416	95.80	Pag.: 396
PD/1417	115.00	Pag.: 407
PD/1418-A	164.40	Pag.: 450
PD/1419	141.70	Pag.: 429
PD/1420	104.60	Pag.: 399
PD/1421	148.80	Pag.: 435
PD/1422	155.20	Pag.: 442
PD/1423	122.70	Pag.: 411
PD/1424	175.50	Pag.: 455
PD/1425	131.60	Pag.: 420
PD/1426	141.70	Pag.: 429
PD/1427	181.40	Pag.: 457
PD/1428	141.00	Pag.: 428
PD/1429	165.40	Pag.: 452
PD/1431	124.60	Pag.: 414
PD/1432	155.20	Pag.: 442
PD/1433	151.90	Pag.: 439
PD/1434	194.00	Pag.: 462
PD/1438	124.00	Pag.: 414
PD/1439-B	163.60	Pag.: 449
PD/1440-B	128.60	Pag.: 417
PD/1441	123.00	Pag.: 412
PD/1442	129.80	Pag.: 417
PD/1443-A	146.60	Pag.: 433
PD/1444	155.30/156.40	Pag.: 443
PD/1445	103.70	Pag.: 399
PD/1446	106.10	Pag.: 401
PD/1447	155.10	Pag.: 440

FRAS-LE	LENGTH LONGITUD	DRAWINGS DIBUJOS
PD/1448	121.80	Pag.: 411
PD/1449-A	193.10	Pag.: 462
PD/1450	176.00	Pag.: 455
PD/1451	95.30	Pag.: 395
PD/1452	170.00/171.00	Pag.: 454
PD/1453	106.10	Pag.: 401
PD/1454	188.00	Pag.: 460
PD/1455	188.00	Pag.: 460
PD/1456	105.20	Pag.: 400
PD/1457-B	155.20	Pag.: 443
PD/1458	193.00	Pag.: 462
PD/1459	193.30/194.30	Pag.: 462
PD/1460	189.60	Pag.: 461
PD/1461	116.60	Pag.: 408
PD/1462	130.00	Pag.: 418
PD/1463	209.40	Pag.: 464
PD/1464	187.30	Pag.: 459
PD/1465	109.30	Pag.: 404
PD/1466	106.10	Pag.: 401
PD/1468	100.00	Pag.: 397
PD/1469	131.60	Pag.: 420
PD/1470	150.70	Pag.: 437
PD/1471	119.80	Pag.: 411
PD/1472	194.30	Pag.: 463
PD/1473	139.30/139.50	Pag.: 425
PD/1474	119.60	Pag.: 411
PD/1475	135.00	Pag.: 422
PD/1476	116.60	Pag.: 408
PD/1477-E	131.00	Pag.: 419
PD/1478	204.90/265.30	Pag.: 463
PD/1479	124.00	Pag.: 414
PD/1480	134.20	Pag.: 421
PD/1481	110.00	Pag.: 404
PD/1482-B	150.10/151.30	Pag.: 436
PD/1482	150.10/151.30	Pag.: 436
PD/1483	140.10	Pag.: 426
PD/1487	116.80	Pag.: 409
PD/1488	150.60	Pag.: 437
PD/1489	113.90	Pag.: 406
PD/1490-B	160.10	Pag.: 448
PD/1491	123.00	Pag.: 412
PD/1492	136.40	Pag.: 422
PD/1494	148.60	Pag.: 434
PD/1495	116.00	Pag.: 407
PD/1496	115.60	Pag.: 407
PD/1497	140.80	Pag.: 428
PD/1498	113.20	Pag.: 406
PD/1499	146.75	Pag.: 433
PD/1512	140.80	Pag.: 428
PD/1513	123.20	Pag.: 412
PD/1514	148.00	Pag.: 435

FRAS-LE	WVA	FMSI	CODE FMSI		Set composition	Composición del Juego
PD/1	20011	7021 D45 734 D45	D45	Alfa Romeo, Ford	4 equal pads	4 pastillas iguales
PD/5	20009	755 D21 735 D30	D21 D30	Alfa Romeo, Volkswagen	4 equal pads	4 pastillas iguales
PD/6	20034	7255 D31	D31	Chevrolet, Volkswagen, Volvo	4 equal pads	4 pastillas iguales
PD/7	20030	719 D2	D2	Chevrolet	4 equal pads	4 pastillas iguales
PD/8	20578			Clark, Chevrolet	4 equal pads	4 pastillas iguales
PD/9	20027	724 D4	D4	Chrysler	4 equal pads	4 pastillas iguales
PD/10				Chrysler, Fiat, Ford	4 equal pads	4 pastillas iguales
PD/11				Chevrolet	4 equal pads	4 pastillas iguales
PD/13	20386	7021 D45 7273 D384	D45 D384	Clark, Volkswagen	4 equal pads	4 pastillas iguales
PD/16	20228	7032 D96	não	Volkswagen	4 equal pads	4 pastillas iguales
PD/17	20228	7031 D96	D96	Volkswagen	4 equal pads	4 pastillas iguales
PD/18	20375			Fiat, Ford	4 equal pads	4 pastillas iguales
PD/19-C		788 D50 7013A D50	D50	Agrale, Ford, Chevrolet	2 inner pads 2 outer pads	2 pastillas internas 2 pastillas externas
PD/22				Ford, Chevrolet	4 equal pads	4 pastillas iguales
PD/22-B				Ford, Chevrolet	1 inner pad with spring 1 inner pad with sprind and connector 2 outer pads without connector	1 pastilla interna com resorte 1 pastilla interna con resorte y conector 2 pastillas externas sin conector
PD/23	21193	7242 D350	D350	Volkswagen	2 inner pads with spring 2 outer pads without spring	2 pastillas internas con resorte 2 pastillas externas sin resorte
PD/24	20752 / 20753	7529 D649	D649A	Ford, Volkswagen	2 inner pads with spring 2 outer pads without spring	2 pastillas internas con resorte 2 pastillas externas sin resorte
PD/24-A	20783	7529 D649	D649B	Ford, Volkswagen	1 inner pad with spring 1 inner pad with sprind and connector 2 outer pads without connector	1 pastilla interna com resorte 1 pastilla interna con resorte y conector 2 pastillas externas sin conector
PD/24-B		7529 D649	D649C	Ford, Volkswagen	1 inner pad with spring 1 inner pad with sprind and connector 2 outer pads without connector	1 pastilla interna com resorte 1 pastilla interna con resorte y conector 2 pastillas externas sin conector
PD/25	21193	7242 D350	D350	Fiat	2 inner pads with spring 2 outer pads without spring	2 pastillas internas con resorte 2 pastillas externas sin resorte
PD/25-A	21195			Fiat	1 inner pad with spring 1 inner pad with sprind and connector 2 outer pads without connector	1 pastilla interna com resorte 1 pastilla interna con resorte y conector 2 pastillas externas sin conector
PD/25-B				Fiat	1 inner pad with spring 1 inner pad with sprind and connector 2 outer pads without connector	1 pastilla interna com resorte 1 pastilla interna con resorte y conector 2 pastillas externas sin conector
PD/25-RA				Fiat	2 inner pads with spring 2 outer pads without spring	2 pastillas internas con resorte 2 pastillas externas sin resorte
PD/25-RA-A				Fiat	1 pad with spring 1 pad with spring and connector bipolar 2 pads without spring	1 pastilla con resorte 1 pastilla con resorte y conector bipolar 2 pastillas sin resorte
PD/25-RA-B				Fiat	1 pad with spring 1 pad with spring and connector bipolar 2 pads without spring	1 pastilla con resorte 1 pastilla con resorte y conector bipolar 2 pastillas sin resorte
PD/25-RA-FA				Fiat	1 pad with spring 1 pad with spring and connector bipolar 2 pads without spring	1 pastilla con resorte 1 pastilla con resorte y conector bipolar 2 pastillas sin resorte
PD/25-RA-FB				Fiat	1 pad with spring 1 pad with spring and connector bipolar 2 pads without spring	1 pastilla con resorte 1 pastilla con resorte y conector bipolar 2 pastillas sin resorte
PD/25-RA-P				Fiat	2 pads with spring and connector 2 pads without spring	2 pastillas con resorte y conector 2 pastillas sin resorte
PD/25-RA-R				Fiat	2 pad with spring and connector 2 pads without spring	2 pastillas con resorte y conector 2 pastillas sin resorte
PD/26				Fiat	4 equal pads	4 pastillas iguales
PD/26-A				Fiat	2 inner pads without connector 1 outer pad with connector on right side 1 outer pad with connector on left side	2 pastillas internas sin conector 1 pastilla externa con conector derecho 1 pastilla externa con conector izquierdo
PD/27-A				Fiat	2 inner pads with spring and without connector 1 outer pad with spring and connector on right side 1 outer pad with spring and connector on left side	2 pastillas internas con resorte y sin conector 1 pastilla externa con resorte y conector derecho 1 pastilla externa con resorte y conector izquierdo
PD/28	21962	7242 D350	D350	Ford, Volkswagen	2 inner pads with spring 2 outer pads without spring	2 pastillas internas con resorte 2 pastillas externas sin resorte
PD/28-B				Ford, Volkswagen	1 inner pad with spring 1 inner pad with sprind and connector 2 outer pads without connector	1 pastilla interna com resorte 1 pastilla interna con resorte y conector 2 pastillas externas sin conector
PD/29	29009			Caterpillar, Clark, Terex, Volvo	4 equal pads	4 pastillas iguales
PD/31	20166			Lada	4 equal pads	4 pastillas iguales
PD/32	20660			Lada	4 equal pads	4 pastillas iguales
PD/34		7529 D649	D649	Ford, Volkswagen	2 inner pads with spring 2 outer pads without spring	2 pastillas internas con resorte 2 pastillas externas sin resorte
PD/35	23300			Ford, Volkswagen	4 equal pads	4 pastillas iguales

FRAS-LE	WVA	FMSI	CODE FMSI		Set composition	Composición del Juego
PD/36	21832	7568 D693	D693	Ford, Volkswagen	4 equal pads	4 pastillas iguales
PD/37	21190 / 21192 / 21201	7666 D796	D796	Chevrolet	2 inner pads with spring 2 outer pads without spring	2 pastillas internas con resorte 2 pastillas externas sin resorte
PD/38	21050	7582 D709 7614 D709	D709	Chevrolet	4 equal pads	4 pastillas iguales
PD/39	20907	7201 D298	D298	Ford, Volkswagen	2 inner pads with spring 2 outer pads without spring	2 pastillas internas con resorte 2 pastillas externas sin resorte
PD/40	21368			Chevrolet	2 inner pads with spring 2 outer pads without spring	2 pastillas internas con resorte 2 pastillas externas sin resorte
PD/41	21140	7314 D426	D426	Chevrolet	4 equal pads	4 pastillas iguales
PD/42	20547 / 21353	7563 D688	D688	Chevrolet	2 inner pads with spring 2 outer pads without spring	2 pastillas internas con resorte 2 pastillas externas sin resorte
PD/43				Volkswagen	4 equal pads	4 pastillas iguales
PD/44	23120			Ford, Volkswagen	2 inner pads with spring 2 outer pads without spring	2 pastillas internas con resorte 2 pastillas externas sin resorte
PD/44-B				Ford, Volkswagen	1 inner pad with spring 1 inner pad with sprind and connector 2 outer pads without connector	1 pastilla interna com resorte 1 pastilla interna con resorte y conector 2 pastillas externas sin conector
PD/45				Ford, Volkswagen	2 inner pads with spring 2 outer pads without spring	2 pastillas internas con resorte 2 pastillas externas sin resorte
PD/46	23226	8290 D1176	D1176	Chevrolet	2 inner pads 2 outer pads	2 pastillas internas 2 pastillas externas
PD/47	21962			Fiat	2 inner pads with spring 2 outer pads without spring	2 pastillas internas con resorte 2 pastillas externas sin resorte
PD/47-A	21193			Fiat	2 inner pads with spring and connector 2 outer pads without spring	2 pastillas con resorte y conector 2 pastillas sin resorte
PD/47-RA-P				Peugeot	2 inner pads with spring and connector 2 outer pads without spring	2 pastillas con resorte y conector 2 pastillas sin resorte
PD/48	20907 / 20908	7201 D298	D298	Fiat, Jaguar	2 inner pads with spring 2 outer pads without spring	2 pastillas internas con resorte 2 pastillas externas sin resorte
PD/48-A				Fiat	1 inner pad with spring 1 inner pad with sprind and connector 2 outer pads without connector	1 pastilla interna com resorte 1 pastilla interna con resorte y conector 2 pastillas externas sin conector
PD/49	20668	7144 D228	D228	Fiat	2 inner pads with spring 2 outer pads without spring	2 pastillas internas con resorte 2 pastillas externas sin resorte
PD/50		8329 D1209	D1209	Chevrolet	4 equal pads	4 pastillas iguales
PD/51		8288 D350	D350B	Volkswagen	2 inner pads with spring 2 outer pads without spring	2 pastillas internas con resorte 2 pastillas externas sin resorte
PD/52	21862			Chevrolet	2 inner pads with spring 2 outer pads without spring	2 pastillas internas con resorte 2 pastillas externas sin resorte
PD/54		8284 D1173	D1173	Chevrolet, Volkswagen	2 inner pads with spring 2 outer pads without spring	2 pastillas internas con resorte 2 pastillas externas sin resorte
PD/55	21202	8316 D1196	D1196	Ford	2 inner pads with spring 2 outer pads without spring	2 pastillas internas con resorte 2 pastillas externas sin resorte
PD/57	23063			Chevrolet	1 inner pad with wear indicator on right side 1 inner pad with wear indicator on left side 1 outer pad with wear indicator on right side 1 outer pad with wear indicator on left side	1 pastilla interna con indicador de desgaste derecho 1 pastilla interna con indicador de desgaste izquierdo 1 pastilla externa con indicador de desgaste derecho 1 pastilla externa con indicador de desgaste izquierdo
PD/58	21974 / 23130	7860 D768	D768	Audi, Volkswagen	2 inner pads with spring 2 outer pads with spring	2 pastillas internas con resorte 2 pastillas externas con resorte
PD/58-B	23187 / 23131	7709 D768	D768A	Audi, Volkswagen	1 inner pad with spring 1 inner pad with spring and connector 2 outer pads with spring	1 pastilla interna con resorte 1 pastilla interna con resorte y conector 2 pastillas externas con resorte
PD/59	20961	7335 D340	D340A	Audi, Citroen, Peugeot, Seat, Volkswagen	4 equal pads	4 pastillas iguales
PD/60				Fiat	2 inner pads with spring 2 outer pads without spring	2 pastillas internas con resorte 2 pastillas externas sin resorte
PD/60-A	23218 / 23220			Fiat	2 inner pads with spring and connector 2 outer pads without spring	2 inner pastillas con resorte y conector 2 outer pastillas sin resorte
PD/61	21829	7605 D736	D736	Ford	2 inner pads with spring 2 outer pads without spring	2 pastillas internas con resorte 2 pastillas externas sin resorte
PD/62		7625 D756 7625 D824	D756 D824	Ford	4 equal pads	4 pastillas iguales
PD/63		7626 D757	D757	Ford	4 equal pads	4 pastillas iguales
PD/64	23484			Kia Motors	1 inner pad with wear indicator on right side 1 inner pad with wear indicator on left side 2 outer pads	1 pastilla interna con indicador de desgaste derecho 1 pastilla interna con indicador de desgaste izquierdo 2 pastillas externas
PD/65	20753	8251 D1140	D1140	Ford	2 inner pads with spring 2 outer pads without spring	2 pastillas internas con resorte 2 pastillas externas sin resorte
PD/66				Fiat	2 inner pads with spring 2 outer pads without spring	2 pastillas internas con resorte 2 pastillas externas sin resorte
PD/66-A	21636			Fiat	2 inner pads with spring and connector 2 outer pads without spring	2 inner pastillas con resorte y conector 2 outer pastillas sin resorte
PD/66-B				Fiat	1 inner pad with spring 1 inner pad with spring and connector 2 outer pads without spring	1 pastilla interna con resorte 1 pastilla interna con resorte y conector 2 pastillas externas sin resorte
PD/67				Mercedes-Benz	4 equal pads	4 pastillas iguales

FRAS-LE	WVA	FMSI	CODE FMSI		Set composition	Composición del Juego
PD/67-A	23070			Mercedes-Benz	2 inner pads with connector 2 outer pads without connector	2 pastillas internas con conector 2 pastillas externas sin conector
PD/68	23229	7201 D298A	D298A	Fiat	2 inner pads with spring 2 outer pads without spring	2 pastillas internas con resorte 2 pastillas externas sin resorte
PD/68-B				Fiat	1 pad with spring and connector 1 pad with spring 2 outer pads without connector	1 pastilla interna con resorte y conector 1 pastilla interna con resorte 2 pastillas externas sin conector
PD/69	23649			Kia Motors	1 inner pad with wear indicator on right side 1 inner pad with wear indicator on left side 2 outer pads	1 pastilla interna con indicador de desgaste derecho 1 pastilla interna con indicador de desgaste izquierdo 2 pastillas externas
PD/71				Honda	1 inner pad with wear indicator on right side 1 inner pad with wear indicator on left side 2 outer pads	1 pastilla interna con indicador de desgaste derecho 1 pastilla interna con indicador de desgaste izquierdo 2 pastillas externas
PD/72	23057	8252 D1141	D1141	Chevrolet	2 inner pads with spring 1 outer pad with wear indicator on right side 1 outer pad with wear indicator on left side	2 pastillas internas con resorte 1 pastilla externa con indicador de desgaste derecho 1 pastilla externa con indicador de desgaste izquierdo
PD/73	21974	7635 D768	D768B	Audi, Volkswagen	2 inner pads with spring 2 outer pads with spring	2 pastillas internas con resorte 2 pastillas externas con resorte
PD/73-B				Audi, Volkswagen	1 inner pad with spring 1 inner pad with spring and connector 2 outer pads with spring	1 pastilla interna con resorte 1 pastilla interna con resorte y conector 2 pastillas externas con resorte
PD/74	23487			Mitsubishi	1 inner pad with wear indicator on right side 1 ineer pad with wear indicator on left side 2 outer pads without wear indicator	1 pastilla interna con indicador de desgaste derecho 1 pastilla interna con indicador de desgaste izquierdo 2 pastillas externas sin indicador de desgaste
PD/75	20958	7155 D233 7251 D233	D233	Nissan	4 equal pads	4 pastillas iguales
PD/76		7679 D806	D806	Ford, Jaguar, Lincoln	4 equal pads	4 pastillas iguales
PD/77		8308 D1189	D1189	Chevrolet	2 inner pads with spring 1 outer pad with wear indicator on right side 1 outer pad with wear indicator on left side	2 pastillas internas con resorte 1 pastilla externa con indicador de desgaste derecho 1 pastilla externa con indicador de desgaste izquierdo
PD/78-A				Fiat	2 pads with connector 2 pads without connector	2 pastillas con conector 2 pastillas sin conector
PD/79				Ford	2 inner pads with spring 2 outer pads without spring	2 pastillas internas con resorte 2 pastillas externas sin resorte
PD/80				Ford	2 inner pads with spring 2 outer pads without spring	2 pastillas internas con resorte 2 pastillas externas sin resorte
PD/81				Volkswagen	2 inner pads with spring 2 outer pads without spring	2 pastillas internas con resorte 2 pastillas externas sin resorte
PD/82				Chevrolet	2 inner pads with spring 2 outer pads without spring	2 pastillas internas con resorte 2 pastillas externas sin resorte
PD/84				Chevrolet	2 inner pads with spring 1 outer pad with wear indicator on right side 1 outer pad with wear indicator on left side	2 pastillas internas con resorte 1 pastilla externa con indicador de desgaste derecho 1 pastilla externa con indicador de desgaste izquierdo
PD/85				Fiat	2 inner pads with spring 2 outer pads without spring	2 pastillas internas con resorte 2 pastillas externas sin resorte
PD/87				Fiat	2 inner pads with spring 2 outer pads without spring	2 pastillas internas con resorte 2 pastillas externas sin resorte
PD/88		8777 D1568	D1568	Fiat	2 inner pads with spring 2 outer pads without spring	2 pastillas internas con resorte 2 pastillas externas sin resorte
PD/89				Fiat	2 inner pads with spring 2 outer pads without spring	2 pastillas internas con resorte 2 pastillas externas sin resorte
PD/90				Fiat	2 inner pads with spring 2 outer pads without spring	2 pastillas internas con resorte 2 pastillas externas sin resorte
PD/91				Ford	2 inner pads with spring 2 outer pads without spring	2 pastillas internas con resorte 2 pastillas externas sin resorte
PD/92				Fiat	2 inner pads with spring 2 outer pads without spring	2 pastillas internas con resorte 2 pastillas externas sin resorte
PD/92-B				Fiat	1 inner pad with spring 1 inner pad with spring and connector 2 outer pads with spring	1 pastilla interna con resorte 1 pastilla interna con resorte y conector 2 pastillas externas con resorte
PD/93				General Motors	2 inner pads with spring 1 outer pad with wear indicator on right side 1 outer pad with wear indicator on left side	2 pastillas internas con resorte 1 pastilla externa con indicador de desgaste derecho 1 pastilla externa con indicador de desgaste izquierdo
PD/94				General Motors	2 inner pads with spring 1 outer pad with wear indicator on right side 1 outer pad with wear indicator on left side	2 pastillas internas con resort 1 pastilla externa con indicador de desgaste derecho 1 pastilla externa con indicador de desgaste izquierdo
PD/102		8321 D1201	D1201	Agrale, Ford, Marcopolo	4 equal pads	4 pastillas iguales
PD/103				Chevrolet	4 equal pads	4 pastillas iguales
PD/104	29835	7968 D1062	D1062	Mercedes-Benz	4 equal pads	4 pastillas iguales
PD/104-A		7968 D1062A	D1062A	Mercedes-Benz	2 inner pads without spring 1 outer pad with wear indicator on right side 1 outer pad with wear indicator on left side	2 pastillas internas sin resort 1 pastilla externa con indicador de desgaste derecho 1 pastilla externa con indicador de desgaste izquierdo
PD/105				Ford, Chevrolet	4 equal pads	4 pastillas iguales
PD/106		8328 D1208	D1208	Ford, Chevrolet	4 equal pads	4 pastillas iguales
PD/107				Chevrolet, Toyota	2 inner pads with spring 2 outer pads without spring	2 pastillas internas con resorte 2 pastillas externas sin resorte
PD/108	29071			Mercedes-Benz	2 inner pads 2 outer pads	2 pastillas internas 2 pastillas externas

FRAS-LE	WVA	FMSI	CODE FMSI		Set composition	Composición del Juego
PD/109				Ford	4 equal pads	4 pastillas iguales
PD/110	23663	7593 D726	D726A	Chevrolet	2 inner pads 2 outer pads	2 pastillas internas 2 pastillas externas
PD/111	29153	7848 D949	D949	Mercedes-Benz	4 equal pads	4 pastillas iguales
PD/111-A	29076	7848 D949A	D949A	Mercedes-Benz	2 inner pads with spring and connector 2 outer pads with spring	2 pastillas internas con resorte y conector 2 pastillas externas sin resorte
PD/112	29090	8427 D1312	D1312	Renault	4 equal pads	4 pastillas iguales
PD/113				Chevrolet	4 equal pads	4 pastillas iguales
PD/114				Toyota	1 inner pad with wear indicator on right side 1 inner pad with wear indicator on left side 2 outer pads	1 pastilla interna con indicador de desgaste derecho 1 pastilla interna con indicador de desgaste izquierdo 2 pastillas externas
PD/115	21679 / 21785 21789 / 21790	7298 D436	D436A	Toyota	2 inner pads 2 outer pads	2 pastillas internas 2 pastillas externas
PD/116	29042 / 29059 / 29060 29061 / 29062 / 29087 29105 / 29106 / 29108 29109 / 29163 / 29202 29278 / 29196	8323 D1203	D1203	Bova, Iveco, Mercedes-Benz, Scania	4 equal pads	4 pastillas iguales
PD/117	29117	8727 D1518	D1518	Mercedes-Benz	4 equal pads	4 pastillas iguales
PD/117-A				Mercedes-Benz	2 inner pads with connector 2 outer pads without connector	2 pastillas internas con conector 2 pastillas externas sin conector
PD/118	23021	7829 D928	D928	Mercedes-Benz	2 pads with hole for connector 2 pads without hole	2 pastillas con agujero para conector 2 pastillas sin agujero
PD/118-A		7829 D928	D928	Mercedes-Benz	2 inner pads with connector 2 outer pads without connector	2 pastillas internas con conector 2 pastillas externas sin conector
PD/120	29093 / 29094 29095 / 29096 / 29287			MAN, Mercedes-Benz, SAF	4 equal pads	4 pastillas iguales
PD/121				Iveco	4 equal pads	4 pastillas iguales
PD/121-A				Iveco	2 inner pads with connector 2 outer pads without connector	2 pastillas internas con conector 2 pastillas externas sin conector
PD/122	29121	8835 D1487	D1487	Iveco	4 equal pads	4 pastillas iguales
PD/122-A				Iveco	2 inner pads with connector 2 outer pads without connector	2 pastillas internas con conector 2 pastillas externas sin conector
PD/123	29067	7931 D1027	D1027	Iveco	4 equal pads	4 pastillas iguales
PD/124	29088	8727 D1518	D1518	MAN	4 equal pads	4 pastillas iguales
PD/125	29030 / 29083 29113	8515 D1407	D1407	Kässbohrer	4 equal pads	4 pastillas iguales
PD/125 c/30.0	29053 / 29084 / 29114			Kässbohrer	4 equal pads	4 pastillas iguales
PD/126		7141 D224	D224	Chevrolet Truck	4 equal pads	4 pastillas iguales
PD/127		7818 D225	D225	Chevrolet Truck	2 inner pads 2 outer pads	2 pastillas internas 2 pastillas externas
PD/128	29011			Iveco	4 equal pads	4 pastillas iguales
PD/129	29131 / 29156	8425 D1310	D1310	Meritor	4 equal pads	4 pastillas iguales
PD/130	29169 / 29177			Volvo	4 equal pads	4 pastillas iguales
PD/131	29126 / 29159	8556 D1438	D1438	Volvo	4 equal pads	4 pastillas iguales
PD/132	21539	7353 D473	D473	Ford, Mazda, Mercury, Honda	1 inner pad with wear indicator on right side 1 inner pad with wear indicator on left side 2 outer pads	1 pastilla interna con indicador de desgaste derecho 1 pastilla interna con indicador de desgaste izquierdo 2 pastillas externas
PD/133		7815 D380	D380	Chevrolet Truck, GMC Truck	2 inner pads 2 outer pads	2 pastillas internas 2 pastillas externas
PD/134	23951	7744 D869	D869	Chrysler, Dodge, Mitsubishi	2 inner pads with spring 2 outer pads without spring	2 pastillas internas con resorte 2 pastillas externas sin resorte
PD/135	23318	7530A D650	D650	Chrysler, Dodge, Plymouth	2 inner pads with spring 1 outer pad with wear indicator on right side 1 outer pad with wear indicator on left side	2 pastillas internas con resorte 1 pastilla externa con indicador de desgaste derecho 1 pastilla externa con indicador de desgaste izquierdo
PD/136		7170 D265	D265	Nissan	4 equal pads	4 pastillas iguales
PD/137	24757 / 24758 / 24759	7558 D679	D679	Ford Truck, Lincoln	2 inner pads without spring 1 outer pad with wear indicator on right side 1 outer pad with wear indicator on left side	2 pastillas internas sin resorte 1 pastilla externa con indicador de desgaste derecho 1 pastilla externa con indicador de desgaste izquierdo
PD/138	29124 / 29155	8733 D1525	D1525	Meritor	4 equal pads	4 pastillas iguales
PD/139	29122			Iveco	4 equal pads	4 pastillas iguales
PD/140-A	29039			Volvo	2 inner pads with connector 2 outer pads without connector	2 pastillas internas con conector 2 pastillas externas sin conector
PD/141	29167			BPW	4 equal pads	4 pastillas iguales
PD/142	29165			BPW	4 equal pads	4 pastillas iguales
PD/143		7636 D769	D769	Chevrolet Truck, Ford Truck, GMC Truck, Thomas	4 equal pads	4 pastillas iguales

FRAS-LE	WVA	FMSI	CODE FMSI		Set composition	Composición del Juego
PD/144		7636 D1032	D1032	Chevrolet Truck	2 inner pads without wear indicator 2 outer pads with wear indicator on right side	2 pastillas internas sin indicador de desgaste 2 pastillas externas con indicador de desgaste derecho
PD/145		7654 D786	D786	International Truck	4 equal pads	4 pastillas iguales
PD/146		7655 D786	D786A	International Truck	4 equal pads	4 pastillas iguales
PD/147	29171			BPW	4 equal pads	4 pastillas iguales
PD/148	29017	7817 D494	D494	DAF, Iveco, Leyland	4 equal pads	4 pastillas iguales
PD/148-A	29024			DAF, Iveco, Leyland	2 inner pads without connector 2 outer pads with connector	2 pastillas internas sin conector 2 pastillas externas con conector
PD/149	29188	8435 D1323	D1323		4 equal pads	4 pastillas iguales
PD/150-A	21006			Mercedes-Benz	2 inner pads without connector 2 outer pads with connector	2 pastillas internas sin conector 2 pastillas externas con conector
PD/151-A	29140			Iveco	2 inner pads without connector 2 outer pads with connector	2 pastillas internas sin conector 2 pastillas externas con conector
PD/152	29055			Man	4 equal pads	4 pastillas iguales
PD/154	29302	7816 D442	D442	AWD, Ford, Optare, Volvo	4 equal pads	4 pastillas iguales
PD/155-E	29013			Dennis - Renault	4 equal pads with connector	4 pastillas iguales con conector
PD/156	29032			Iveco	4 equal pads	4 pastillas iguales
PD/159	29136			Volvo	4 equal pads	4 pastillas iguales
PD/160	29137			Volvo	4 equal pads	4 pastillas iguales
PD/161	29142 / 29119	8726 D1517	D1517	Renault	4 equal pads	4 pastillas iguales
PD/163	29123			Iveco	4 equal pads	4 pastillas iguales
PD/164	29162			PAN 22	4 equal pads	4 pastillas iguales
PD/166	29043			Dennis - Renault	4 equal pads	4 pastillas iguales
PD/168-A	29077 / 29092			Daf, Neoplan	2 inner pads without connector 2 outer pads with connector	2 pastillas internas sin conector 2 pastillas externas con conector
PD/169-E	29097			Renault	4 equal pads with connector	4 pastillas iguales con conector
PD/170	29143 / 29185	8735 D1527	D1527	SAE, SAF, SMB	4 equal pads	4 pastillas iguales
PD/172	29158	8479 D1369	D1369	Trailers	4 equal pads	4 pastillas iguales
PD/173	29189	8480 D1370	D1370		4 equal pads	4 pastillas iguales
PD/175	29747			Bova, DAF, Kässbohrer, Van Hool	4 equal pads	4 pastillas iguales
PD/176	29969			Bova, DAF, Kässbohrer, Van Hool	4 equal pads	4 pastillas iguales
PD/177		7914 D1010	D1010	Chevrolet Truck, GMC Truck	4 equal pads	4 pastillas iguales
PD/178		7969 D1064	D1064	Chevrolet Truck, GMC Truck	4 equal pads	4 pastillas iguales
PD/179	29180	8374 D1526	D1526		4 equal pads	4 pastillas iguales
PD/185		8382 D1265	D1265	Mitsubishi Fuso	2 inner pads with hole 6 outer pads	2 pastillas internas com agujero 6 pastillas externas
PD/187	29187	8426 D1311	D1311	Meritor, yutong	4 equal pads	4 pastillas iguales
PD/188-A	29121			Nissan	2 inner pads without connector 2 outer pads with connector	2 pastillas internas sin conector 2 pastillas externas con conector
PD/189	29229			Iveco	4 equal pads	4 pastillas iguales
PD/189-A				Iveco	2 inner pads without connector 2 outer pads with connector	2 pastillas internas sin conector 2 pastillas externas con conector
PD/190	29232			Iveco	4 equal pads	4 pastillas iguales
PD/191-A	29040				2 inner pads without connector 2 outer pads with connector	2 pastillas internas sin conector 2 pastillas externas con conector
PD/192-A	29138				2 inner pads without connector 2 outer pads with connector	2 pastillas internas sin conector 2 pastillas externas con conector
PD/193-A	29029				2 inner pads without connector 2 outer pads with connector	2 pastillas internas sin conector 2 pastillas externas con conector
PD/194	29141				4 equal pads	4 pastillas iguales
PD/195	29173 / 29203 / 29272				4 equal pads	4 pastillas iguales
PD/196	29174 / 29219 29204 / 29218 / 29226	8931 D1708	D1708	Volvo	4 equal pads	4 pastillas iguales
PD/197	29154				4 equal pads	4 pastillas iguales
PD/200		8917 D1690	D1690		4 equal pads	4 pastillas iguales
PD/201	29231			Iveco	4 equal pads	4 pastillas iguales
PD/202	29151			Volvo	4 equal pads	4 pastillas iguales
PD/204	29254			Sinotruk	4 equal pads	4 pastillas iguales
PD/205	29246 / 29247 / 29300 / 29301			Mercedes-Benz	2 inner pads 2 outer pads	2 pastillas internas 2 pastillas externas
PD/206	29244 / 29245 29298 / 29299			Mercedes-Benz	2 inner pads 2 outer pads	2 pastillas internas 2 pastillas externas
PD/207	29150				4 equal pads	4 pastillas iguales
PD/208	29237				4 equal pads	4 pastillas iguales
PD/209	29181 / 29207				4 equal pads	4 pastillas iguales

FRAS-LE	WVA	FMSI	CODE FMSI		Set composition	Composición del Juego
PD/213	29175 / 29195 / 29198 / 29274 / 29294	8795 D1583	D1583	SAF GIGANT	4 equal pads	4 pastillas iguales
PD/214	29279			MAN	4 equal pads	4 pastillas iguales
PD/300	24822 / 28823 / 24824	8438 D1326	D1326	Chrysler, Dodge	2 inner pads without wear indicator 1 outer pad with wear indicator on right side 1 outer pad with wear indicator on left side	2 pastillas internas sin indicador de desgaste 1 pastilla externa con indicador de desgaste derecho 1 pastilla externa con indicador de desgaste izquierdo
PD/301	20347	793 D49	D49	Renault	2 pads with rivets on right side 2 pads with rivets on left side	2 pastillas con remaches derecho 2 pastillas con remaches izquierdo
PD/301-A				Fiat	2 inner pads without connector 1 outer pad with connector on right side 1 outer pad with connector on left side	2 pastillas internas sin conector 1 pastilla externa con conector derecho 1 pastilla externa con conector izquierdo
PD/302				Renault	4 equal pads	4 pastillas iguales
PD/303-A		7123 D201	D201	Renault	2 inner pads without connector 1 outer pad with connector on right side 1 outer pad with connector on left side	2 pastillas internas sin conector 1 pastilla externa con conector derecho 1 pastilla externa con conector izquierdo
PD/304	20671			Renault	4 equal pads	4 pastillas iguales
PD/305	20772			Renault	4 equal pads	4 pastillas iguales
PD/305-A	20937	7194 D292	D292	Renault	2 inner pads without connector 1 outer pad with connector on right side 1 outer pad with connector on left side	2 pastillas internas sin conector 1 pastilla externa con conector derecho 1 pastilla externa con conector izquierdo
PD/306	20578			Ford, Volkswagen	4 equal pads	4 pastillas iguales
PD/307	20323	7043 D109	D109	Chevrolet, Chrysler, Volkswagen	4 equal pads	4 pastillas iguales
PD/308	20073	798 D54	D54	Fiat	4 equal pads	4 pastillas iguales
PD/309	20775 / 20776 / 20777			Fiat	4 equal pads	4 pastillas iguales
PD/310	21131			Fiat	4 equal pads	4 pastillas iguales
PD/311-A	20145	7010 D77	D77	Peugeot	2 inner pads without connector 1 outer pad with connector on right side 1 outer pad with connector on left side	2 pastillas internas sin conector 1 pastilla externa con conector derecho 1 pastilla externa con conector izquierdo
PD/312-A	20632	7116 D193	D193	Peugeot	2 inner pads without connector 1 outer pad with connector on right side 1 outer pad with connector on left side	2 pastillas internas sin conector 1 pastilla externa con conector derecho 1 pastilla externa con conector izquierdo
PD/313	20007	721 D9	D9	Fiat, Peugeot	4 equal pads	4 pastillas iguales
PD/316				Chrysler	4 equal pads	4 pastillas iguales
PD/317	20172			Chrysler, Renault, Volkswagen	2 right hand pads 2 left hand pads	2 pastillas derechas 2 pastillas izquierdas
PD/318-A	20926 / 20928			Renault	2 inner pads without connector 1 outer pad with connector on right side 1 outer pad with connector on left side	2 pastillas internas sin conector 1 pastilla externa con conector derecho 1 pastilla externa con conector izquierdo
PD/319	20074	7001 D71	D71	Fiat	4 equal pads	4 pastillas iguales
PD/320				Renault	2 inner pads without connector 1 outer pad with connector on right side 1 outer pad with connector on left side	2 pastillas internas sin conector 1 pastilla externa con conector derecho 1 pastilla externa con conector izquierdo
PD/321-A	21016	7244 D351	D351	Renault	2 inner pads without connector 1 outer pad with connector on right side 1 outer pad with connector on left side	2 pastillas internas sin conector 1 pastilla externa con conector derecho 1 pastilla externa con conector izquierdo
PD/322-A	20905	7261 D371	D371	Citroën, Peugeot, Renault	1 right hand pad 1 left hand pad 1 right hand pad with connector 1 left hand pad with connector	1 pastilla derecha 1 pastilla izquierda 1 pastilla derecha con conector 1 pastilla izquierda con conector
PD/324		728A D52	D52A	Chevrolet, Jeep	2 inner pads without connector 1 outer pad with connector on right side 1 outer pad with connector on left side	2 pastillas internas sin conector 1 pastilla externa con conector derecho 1 pastilla externa con conector izquierdo
PD/326-A	21209 / 21210	7334 D454	D454	Citroën, Peugeot	2 inner pads without connector 2 outer pads with connector	2 pastillas internas sin conector 2 pastillas externas con conector
PD/327	21096	7394 D516	D516	Peugeot, Renault	2 right hand pads 2 left hand pads	2 pastillas derechas 2 pastillas izquierdas
PD/328	20887	7209 D569	D569A	Seat, Volkswagen	2 inner pads 2 outer pads	2 pastillas internas 2 pastillas externas
PD/329	20168	7570 D696A	D696A	Seat, Volkswagen	2 inner pads with spring 2 outer pads without spring	2 pastillas internas con resorte 2 pastillas externas sin resorte
PD/330	20780			Asia Motors	4 equal pads	4 pastillas iguales
PD/331	23784			Asia Motors	2 inner pads without wear indicator 1 outer pad with wear indicator on right side 1 outer pad with wear indicator on left side	2 pastillas internas sin indicador de desgaste 1 pastilla externa con indicador de desgaste derecho 1 pastilla externa con indicador de desgaste izquierdo
PD/332	23472	7532 D652	D652	Ford	2 inner pads without wear indicator 1 outer pad with wear indicator on right side 1 outer pad with wear indicator on left side	2 pastillas internas sin indicador de desgaste 1 pastilla externa con indicador de desgaste derecho 1 pastilla externa con indicador de desgaste izquierdo
PD/333	20002 / 20191 / 20192			Kia Motors	2 inner pads without wear indicator 1 outer pad with wear indicator on right side 1 outer pad with wear indicator on left side	2 pastillas internas sin indicador de desgaste 1 pastilla externa con indicador de desgaste derecho 1 pastilla externa con indicador de desgaste izquierdo
PD/334	21144	7144 D228	D228A	Alfa Romeo, Audi	4 equal pads	4 pastillas iguales
PD/335-A	20833	D147	D147	Alfa Romeo, Fiat	2 inner pads without wear indicator 1 outer pad with wear indicator on right side 1 outer pad with wear indicator on left side	2 pastillas internas sin indicador de desgaste 1 pastilla externa con indicador de desgaste derecho 1 pastilla externa con indicador de desgaste izquierdo

FRAS-LE	WVA	FMSI	CODE FMSI		Set composition	Composición del Juego
PD/336	20168	7571 D684A	D684A	Audi	2 inner pads with spring 2 outer pads without spring	2 pastillas internas con resorte 2 pastillas externas sin resorte
PD/337	20168	7570 D696	D696	Seat, Volkswagen	4 equal pads	4 pastillas iguales
PD/338	21404			Renault	4 equal pads	4 pastillas iguales
PD/338-A	21463	8256 D1146	D1146	Renault	2 inner pads without wear indicator 1 outer pad with wear indicator on right side 1 outer pad with wear indicator on left side	2 pastillas internas sin indicador de desgaste 1 pastilla externa con indicador de desgaste derecho 1 pastilla externa con indicador de desgaste izquierdo
PD/339-A	29107			Iveco	2 inner pads without connector 2 outer pads with connector	2 pastillas internas sin conector 2 pastillas externas con conector
PD/340-B	23392	7710 D687	D687A	Audi, Volkswagen	1 inner pad with spring 1 inner pad with spring and connector 2 outer pads without spring	1 pastilla interna con resorte 1 pastilla interna con resorte y conector 2 pastillas externas sin resorte
PD/341	21592	7909 D1006	D1006	Mercedes-Benz, Volkswagen	2 inner pads with spring 2 outer pads without spring	2 pastillas internas con resorte 2 pastillas externas sin resorte
PD/341-A	23901 / 23902	7909 D1006A	D1006A	Mercedes-Benz	2 inner pads without connector 2 outer pads with connector	2 pastillas internas sin conector 2 pastillas externas con conector
PD/342	23434			Ford	1 pad with spring on right side 1 pad with spring on left side 1 pad with spring and wear indicator on right side 1 pad with spring and wear indicator on left side	1 pastilla con resorte derecho 1 pastilla con resorte izquierdo 1 pastilla con resorte y indicador de desgaste derecho 1 pastilla con resorte y indicador de desgaste izquierdo
PD/343	23518 / 23520			Hyundai, Mitsubishi	2 inner pads without wear indicator 1 outer pad with wear indicator on right side 1 outer pad with wear indicator on left side	2 pastillas internas sin indicador de desgaste 1 pastilla externa con indicador de desgaste derecho 1 pastilla externa con indicador de desgaste izquierdo
PD/344	20008	7257 D366	D366	Daihatsu, Ford, Mazda, Mercury	4 equal pads	4 pastillas iguales
PD/346	23600	8749 D1541	D1541	Peugeot	4 equal pads	4 pastillas iguales
PD/347	23613			Nissan, Opel, Renault	4 equal pads	4 pastillas iguales
PD/348		7834 D931	D931	Ford, Lincoln, Mercury	4 equal pads	4 pastillas iguales
PD/349		7835 D932	D932	Ford, Lincoln, Mercury	2 inner pads without wear indicator 1 outer pad with wear indicator on right side 1 outer pad with wear indicator on left side	2 pastillas internas sin indicador de desgaste 1 pastilla externa con indicador de desgaste derecho 1 pastilla externa con indicador de desgaste izquierdo
PD/350	21470			Ford	4 equal pads	4 pastillas iguales
PD/351	21469			Ford	4 equal pads	4 pastillas iguales
PD/352	21394	7528 D648 7528 D745	D648 D745	Ford	2 inner pads with spring 2 outer pads without spring	2 pastillas internas con resorte 2 pastillas externas sin resorte
PD/352-A	21395	7672 D801	D801	Ford	2 inner pads with connector 2 outer pads	2 pastillas internas con conector 2 pastillas externas
PD/353	23600			Peugeot	4 equal pads	4 pastillas iguales
PD/354				Hyundai	2 inner pads without wear indicator 1 outer pad with wear indicator on right side 1 outer pad with wear indicator on left side	2 pastillas internas sin indicador de desgaste 1 pastilla externa con indicador de desgaste derecho 1 pastilla externa con indicador de desgaste izquierdo
PD/355	29065			Iveco	4 equal pads	4 pastillas iguales
PD/356		7503 D632	D632	Ford	2 inner pads with spring 2 outer pads without spring	2 pastillas internas con resorte 2 pastillas externas sin resorte
PD/357	21467 / 21543 / 21544	7253 D363 7347 D363	D363	Chevrolet, Isuzu	2 pads with wear indicator on right side 2 pads with wear indicator on left side	2 pastillas con indicador de desgaste derecho 2 pastillas con indicador de desgaste izquierdo
PD/358	21797			Citroën, Fiat, Peugeot	4 equal pads	4 pastillas iguales
PD/358-A	21798			Citroën, Fiat, Peugeot	2 inner pads 2 outer pads with connector	2 pastillas internas 2 pastillas externas con conector
PD/359-A	29041			Iveco	2 inner pads 2 outer pads with connector	2 pastillas internas 2 pastillas externas con conector
PD/360-A	29012			Iveco, Volvo	2 inner pads 2 outer pads with connector	2 pastillas internas 2 pastillas externas con conector
PD/361-A	20455	7073 D455	D455	Peugeot	2 inner pads 2 outer pads with connector	2 pastillas internas 2 pastillas externas con conector
PD/362	20961	7234 D340	D340	Audi, Peugeot, Seat, Volkswagen	4 equal pads	4 pastillas iguales
PD/363-A	21080			Citroën, Peugeot	2 inner pads with spring and without connector 1 outer pad with connector and spring on right side 1 outer pad with connector and spring on left side	2 pastillas internas con resorte y sin conector 1 pastilla externa con conector y resorte derecho 1 pastilla externa con conector y resorte izquierdo
PD/364-A	21430			Peugeot	2 inner pads with spring and connector 2 outer pads without connector	2 pastillas internas con resorte y conector 2 pastillas externas sin conector
PD/365		7706 D833	D833	Ford Truck, Mazda, Mercury	4 equal pads	4 pastillas iguales
PD/366				Toyota	2 pads with support plate on right side 2 pads with support plate on left side	2 pastillas con chapa de anclaje derecho 2 pastillas con chapa de anclaje izquierdo
PD/367	21866	7569 D694 8702 D694	D694	Audi, Volkswagen	2 inner pads with spring 2 outer pads without spring	2 pastillas internas con resorte 2 pastillas externas sin resorte
PD/368	21866	7569 D694	D694A	Seat, Volkswagen	2 inner pads with spring 2 outer pads without spring	2 pastillas internas con resorte 2 pastillas externas sin resorte
PD/369-B	23602			Citroën, Fiat	3 pads without connector 1 pad with connector	3 pastillas sin conector 1 pastilla con conector
PD/370				Randon	1 right hand pad 1 left hand pad	1 pastilla derecha 1 pastilla izquierda
PD/371				Randon	1 right hand pad 1 left hand pad	1 pastilla derecha 1 pastilla izquierda
PD/372				Randon	2 equal pads	2 pastillas iguales
PD/373				Randon	2 equal pads	2 pastillas iguales

FRAS-LE	WVA	FMSI	CODE FMSI		Set composition	Composición del Juego
PD/374	21830	7125A D387	D387	Ford	2 inner pads with spring 2 outer pads with spring	2 pastillas internas con resorte 2 pastillas externas con resorte
PD/376	21654	7219 D466	D466	Ford, Mazda	2 inner pads without wear indicator 1 outer pad with wear indicator on right side 1 outer pad with wear indicator on left side	2 pastillas internas sin indicador de desgaste 1 pastilla externa con indicador de desgaste derecho 1 pastilla externa con indicador de desgaste izquierdo
PD/377	21373	7241 D349	D349	Mitsubishi	2 inner pads without wear indicator 1 outer pad with wear indicator on right side 1 outer pad with wear indicator on left side	2 pastillas internas sin indicador de desgaste 1 pastilla externa con indicador de desgaste derecho 1 pastilla externa con indicador de desgaste izquierdo
PD/378	21500	7305 D418	D418	GEO, Suzuki	2 inner pads without wear indicator 1 outer pad with wear indicator on right side 1 outer pad with wear indicator on left side	2 pastillas internas sin indicador de desgaste 1 pastilla externa con indicador de desgaste derecho 1 pastilla externa con indicador de desgaste izquierdo
PD/379	21333	7331 D451	D451	Suzuki	2 inner pads without wear indicator 1 outer pad with wear indicator on right side 1 outer pad with wear indicator on left side	2 pastillas internas sin indicador de desgaste 1 pastilla externa con indicador de desgaste derecho 1 pastilla externa con indicador de desgaste izquierdo
PD/380	21344 / 21345 / 21346	7332 D452	D452	Suzuki	2 inner pads without wear indicator 1 outer pad with wear indicator on right side 1 outer pad with wear indicator on left side	2 pastillas internas sin indicador de desgaste 1 pastilla externa con indicador de desgaste derecho 1 pastilla externa con indicador de desgaste izquierdo
PD/382	21773	7376 D497 7293 D440	D440 D497	Hyundai	2 inner pads without wear indicator 1 outer pad with wear indicator on right side 1 outer pad with wear indicator on left side	2 pastillas internas sin indicador de desgaste 1 pastilla externa con indicador de desgaste derecho 1 pastilla externa con indicador de desgaste izquierdo
PD/383	21363	7412 D530	D530	Mitsubishi	2 inner pads without wear indicator 1 outer pad with wear indicator on right side 1 outer pad with wear indicator on left side	2 pastillas internas sin indicador de desgaste 1 pastilla externa con indicador de desgaste derecho 1 pastilla externa con indicador de desgaste izquierdo
PD/384	21911	7434 D555	D555	Audi, Ford, Chevrolet, Seat, Volkswagen	2 inner pads with spring 2 outer pads without spring	2 pastillas internas con resorte 2 pastillas externas sin resorte
PD/384-A	20676	7434A D555	D555A	Audi, Volkswagen	2 inner pads with spring and connector 2 outer pads without spring	2 pastillas internas con resorte y conector 2 pastillas externas sin resorte
PD/385	21292	7437 D558	D558	BMW	2 inner pads with spring 2 outer pads without spring	2 pastillas internas con resorte 2 pastillas externas sin resorte
PD/386	21331	7178 D273	D273	Honda	2 inner pads without wear indicator 1 outer pad with wear indicator on right side 1 outer pad with wear indicator on left side	2 pastillas internas sin indicador de desgaste 1 pastilla externa con indicador de desgaste derecho 1 pastilla externa con indicador de desgaste izquierdo
PD/387	21601	7441 D695 7441 D562	D562 D695	Toyota	2 inner pads without wear indicator 1 outer pad with wear indicator on right side 1 outer pad with wear indicator on left side	2 pastillas internas sin indicador de desgaste 1 pastilla externa con indicador de desgaste derecho 1 pastilla externa con indicador de desgaste izquierdo
PD/388	21879	7448 D568	D568	Honda	2 inner pads without wear indicator 1 outer pad with wear indicator on right side 1 outer pad with wear indicator on left side	2 pastillas internas sin indicador de desgaste 1 pastilla externa con indicador de desgaste derecho 1 pastilla externa con indicador de desgaste izquierdo
PD/389	23637	7479 D601	D601	Ford	4 equal pads	4 pastillas iguales
PD/390	20753			Kia Motors	2 inner pads with spring 2 outer pads without spring	2 pastillas internas con resorte 2 pastillas externas sin resorte
PD/391-A	21388	8255 D1145	D1145	Renault	2 inner pads without connector 2 outer pads with connector	2 pastillas internas sin conector 2 pastillas externas con conector
PD/392		7438B D641	D641	Chrysler	2 inner pads with spring 2 outer pads without spring	2 pastillas internas con resorte 2 pastillas externas sin resorte
PD/393	23004 / 23005	7546 D668		Nissan	2 inner pads without wear indicator 1 outer pad with wear indicator on right side 1 outer pad with wear indicator on left side	2 pastillas internas sin indicador de desgaste 1 pastilla externa con indicador de desgaste derecho 1 pastilla externa con indicador de desgaste izquierdo
PD/394	21515			Honda, Land Rover, Rover	2 inner pads without wear indicator 1 outer pad with wear indicator on right side 1 outer pad with wear indicator on left side	2 pastillas internas sin indicador de desgaste 1 pastilla externa con indicador de desgaste derecho 1 pastilla externa con indicador de desgaste izquierdo
PD/395	23740	7511A D633	D633	Chrysler	2 inner pads with spring 2 outer pads without spring	2 pastillas internas con resorte 2 pastillas externas sin resorte
PD/396	23044	7470A D591	D591	Chrysler	2 inner pads with spring 2 outer pads without spring	2 pastillas internas con resorte 2 pastillas externas sin resorte
PD/397	21497	7345 D465	D465	Honda, Rover	2 inner pads without wear indicator 1 outer pad with wear indicator on right side 1 outer pad with wear indicator on left side	2 pastillas internas sin indicador de desgaste 1 pastilla externa con indicador de desgaste derecho 1 pastilla externa con indicador de desgaste izquierdo
PD/398	21738	7443 D564	D564	Honda	2 inner pads without wear indicator 1 outer pad with wear indicator on right side 1 outer pad with wear indicator on left side	2 pastillas internas sin indicador de desgaste 1 pastilla externa con indicador de desgaste derecho 1 pastilla externa con indicador de desgaste izquierdo
PD/399	20410	7371 D491	D491	Chrysler, Renault	2 pads with spring on right side 2 pads with spring on left side	2 pastillas con resorte derecho 2 pastillas con resorte izquierdo
PD/400-A	20332			Alfa Romeo	2 pads with connector 2 pads without connector	2 pastillas con conector 2 pastillas sin conector
PD/401	21043	7180 D277	D277	Honda, Suzuki	2 inner pads without wear indicator 1 outer pad with wear indicator on right side 1 outer pad with wear indicator on left side	2 pastillas internas sin indicador de desgaste 1 pastilla externa con indicador de desgaste derecho 1 pastilla externa con indicador de desgaste izquierdo
PD/402-A	21586 / 21587	7541 D661	D661	Ford	2 inner pads without connector 2 outer pads with connector	2 pastillas internas sin conector 2 pastillas externas con conector
PD/403-B	21927			Alfa Romeo, Fiat	1 inner pad with spring and without connector 1 inner pad with spring and connector 2 outer pads	1 pastilla interna con resorte y sin conector 1 pastilla interna con resorte y conector 2 pastillas externas
PD/404	21697			Honda	2 inner pads without wear indicator 1 outer pad with wear indicator on right side 1 outer pad with wear indicator on left side	2 pastillas internas sin indicador de desgaste 1 pastilla externa con indicador de desgaste derecho 1 pastilla externa con indicador de desgaste izquierdo
PD/405-E	21674	8342 D1221	D1221	Citroën, Peugeot	4 equal pads	4 pastillas iguales
PD/406	21479	7516 D638	D638	Volkswagen	4 equal pads	4 pastillas iguales
PD/406-B	21479 / 23445	7729 D852	D852	Volkswagen	3 pads without connector 1 pad with connector	3 pastillas sin conector 1 pastilla con conector

FRAS-LE	WVA	FMSI	CODE FMSI		Set composition	Composición del Juego
PD/407	21882	7580 D706	D706	Volkswagen	4 equal pads	4 pastillas iguales
PD/409	21520			Rover	2 inner pads without wear indicator 1 outer pad with wear indicator on right side 1 outer pad with wear indicator on left side	2 pastillas internas sin indicador de desgaste 1 pastilla externa con indicador de desgaste derecho 1 pastilla externa con indicador de desgaste izquierdo
PD/410	23627	7545A D667	D667	Ford	1 inner pad on right side 1 inner pad on left side 1 outer pad on right side 1 outer pad on left side	1 pastilla interna derecha 1 pastilla interna izquierdo 1 pastilla externa derecha 1 pastilla externa izquierdo
PD/411	23346			Citroën	4 equal pads	4 pastillas iguales
PD/411-E	23124	8309 D1190	D1190	Citroën, Peugeot	4 equal pads	4 pastillas iguales
PD/412	23205			Citroën, Peugeot	4 equal pads	4 pastillas iguales
PD/412-B				Renault	3 pads with spring 1 pad with spring and connector	3 pastillas con resorte 1 pastilla con resorte y conector
PD/413	21945	7578 D704	D704	Audi, Seat, Volkswagen	4 equal pads	4 pastillas iguales
PD/414-E	21724			Peugeot	4 equal pads	4 pastillas iguales
PD/415		7513 D635	D635	Mazda	4 equal pads	4 pastillas iguales
PD/416	23471			Land Rover	4 equal pads	4 pastillas iguales
PD/417	21576 / 21577	7849 D950	D950	Mercedes-Benz	2 pads with spring and hole for connector 2 pads without spring and hole	2 pastillas con resorte y agujero para conector 2 pastillas sin resorte y agujero
PD/417-A	21576	7849 D950A	D950A	Mercedes-Benz	2 pads without connector 2 pad with connector	2 pastillas sin conector 2 pastilla con conector
PD/418	21822	7358 D712	D712	Jeep	1 inner pad on right side 1 inner pad on left side 1 outer pad on right side 1 outer pad on left side	1 pastilla interna derecha 1 pastilla interna izquierdo 1 pastilla externa derecha 1 pastilla externa izquierdo
PD/419	21907	7435 D556	D556	GEO, Suzuki	2 inner pads without wear indicator 1 outer pad with wear indicator on right side 1 outer pad with wear indicator on left side	2 pastillas internas sin indicador de desgaste 1 pastilla externa con indicador de desgaste derecho 1 pastilla externa con indicador de desgaste izquierdo
PD/420				Iveco	4 equal pads	4 pastillas iguales
PD/420-A	29001			Iveco	2 pads with connector 2 pads without connector	2 pastillas con conector 2 pastillas sin conector
PD/421	23061			Daewoo, Suzuki	4 equal pads	4 pastillas iguales
PD/422	21799			Citroën, Fiat, Peugeot	4 equal pads	4 pastillas iguales
PD/422-A	21800			Citroën, Fiat, Peugeot	2 inner pads without connector 2 outer pads with connector	2 pastillas internas sin conector 2 pastillas externas con conector
PD/423	21495	7350 D470	D470	Subaru	2 inner pads without wear indicator 1 outer pad with wear indicator on right side 1 outer pad with wear indicator on left side	2 pastillas internas sin indicador de desgaste 1 pastilla externa con indicador de desgaste derecho 1 pastilla externa con indicador de desgaste izquierdo
PD/424	21059	7267 D378	D378	Daewoo	2 inner pads without wear indicator 1 outer pad with wear indicator on right side 1 outer pad with wear indicator on left side	2 pastillas internas sin indicador de desgaste 1 pastilla externa con indicador de desgaste derecho 1 pastilla externa con indicador de desgaste izquierdo
PD/425-A	21278			Mercedes-Benz, Peugeot	2 inner pads without connector 2 outer pads with connector	2 pastillas internas sin conector 2 pastillas externas con conector
PD/426	21372	7247 D356	D356	Toyota	2 inner pads without wear indicator 1 outer pad with wear indicator on right side 1 outer pad with wear indicator on left side	2 pastillas internas sin indicador de desgaste 1 pastilla externa con indicador de desgaste derecho 1 pastilla externa con indicador de desgaste izquierdo
PD/427	21347 / 21348 / 21349	7228 D333	D333	Nissan, Subaru, Toyota	2 inner pads without wear indicator 1 outer pad with wear indicator on right side 1 outer pad with wear indicator on left side	2 pastillas internas sin indicador de desgaste 1 pastilla externa con indicador de desgaste derecho 1 pastilla externa con indicador de desgaste izquierdo
PD/428	21119	7282 D266 7282 D441	D266 D441	Nissan	2 inner pads without wear indicator 1 outer pad with wear indicator on right side 1 outer pad with wear indicator on left side	2 pastillas internas sin indicador de desgaste 1 pastilla externa con indicador de desgaste derecho 1 pastilla externa con indicador de desgaste izquierdo
PD/429	21158	7205 D303	D303	Toyota	4 equal pads	4 pastillas iguales
PD/430	21103			Alfa Romeo, Fiat	4 equal pads	4 pastillas iguales
PD/431	20939			Daewoo, Opel	4 equal pads	4 pastillas iguales
PD/432	23314	7559 D680	D680	Chevrolet, Suzuki	2 inner pads without wear indicator 1 outer pad with wear indicator on right side 1 outer pad with wear indicator on left side	2 pastillas internas sin indicador de desgaste 1 pastilla externa con indicador de desgaste derecho 1 pastilla externa con indicador de desgaste izquierdo
PD/433-B	21930			Alfa Romeo, Fiat	1 inner pad with spring and without connector 1 inner pad with spring and connector 2 outer pads	1 pastilla interna con resorte y sin conector 1 pastilla interna con resorte y conector 2 pastillas externas
PD/435	23597	8254 D1143	D1143	Peugeot	2 right hand pads 2 left hand pads	2 pastillas derechas 2 pastillas izquierdas
PD/436		7946 D1043	D1043	Chevrolet	2 inner pads without connector 2 outer pads with connector	2 pastillas internas sin conector 2 pastillas externas con conector
PD/437		7951 D1048	D1048	Chevrolet	4 equal pads	4 pastillas iguales
PD/438-B	23603			Citroën, Fiat, Peugeot	3 pads without connector 1 pad with connector	3 pastillas sin conector 1 pastilla con conector
PD/439	23177			Alfa Romeo, Fiat	4 equal pads	4 pastillas iguales
PD/440		7290 D401	D401	Nissan	2 inner pads without wear indicator 1 outer pad with wear indicator on right side 1 outer pad with wear indicator on left side	2 pastillas internas sin indicador de desgaste 1 pastilla externa con indicador de desgaste derecho 1 pastilla externa con indicador de desgaste izquierdo
PD/441	21142	7540 D660	D660	Suzuki	4 equal pads	4 pastillas iguales

FRAS-LE	WVA	FMSI	CODE FMSI		Set composition	Composición del Juego
PD/442	23154	7690 D816	D816	Ford	2 inner pads with spring 2 outer pads with spring	2 pastillas internas con resorte 2 pastillas externas con resorte
PD/443	21945			Audi, Seat, Volkswagen	4 equal pads	4 pastillas iguales
PD/445	21845	7585 D579	D579	Honda, Isuzu, Opel	2 inner pads without wear indicator 1 outer pad with wear indicator on right side 1 outer pad with wear indicator on left side	2 pastillas internas sin indicador de desgaste 1 pastilla externa con indicador de desgaste derecho 1 pastilla externa con indicador de desgaste izquierdo
PD/446	21410 / 21481			Nissan	4 equal pads	4 pastillas iguales
PD/447	21730	7450 D570	D570	Suzuki	4 equal pads	4 pastillas iguales
PD/448-A	23040 / 23041 / 23042			Citroën, Fiat, Peugeot	2 inner pads without wear indicator 1 outer pad with wear indicator on right side 1 outer pad with wear indicator on left side	2 pastillas internas sin indicador de desgaste 1 pastilla externa con indicador de desgaste derecho 1 pastilla externa con indicador de desgaste izquierdo
PD/449	21651	7382 D503	D503	Honda, Rover	2 inner pads without wear indicator 1 outer pad with wear indicator on right side 1 outer pad with wear indicator on left side	2 pastillas internas sin indicador de desgaste 1 pastilla externa con indicador de desgaste derecho 1 pastilla externa con indicador de desgaste izquierdo
PD/450	21840	7447 D567	D567	Mitsubishi	2 inner pads without wear indicator 1 outer pad with wear indicator on right side 1 outer pad with wear indicator on left side	2 pastillas internas sin indicador de desgaste 1 pastilla externa con indicador de desgaste derecho 1 pastilla externa con indicador de desgaste izquierdo
PD/451	21605 / 21606			Alfa Romeo	4 equal pads	4 pastillas iguales
PD/452	21650	7417 D535	D535	Mitsubishi, Proton	4 equal pads	4 pastillas iguales
PD/453	21527	7342 D462	D462	Hyundai, Nissan, Ssang Yong	2 inner pads without wear indicator 1 outer pad with wear indicator on right side 1 outer pad with wear indicator on left side	2 pastillas internas sin indicador de desgaste 1 pastilla externa con indicador de desgaste derecho 1 pastilla externa con indicador de desgaste izquierdo
PD/454-E	21507			Peugeot	1 pad with short connector on right side 1 pad with long connector on right side 1 pad with short connector on left side 1 pad with long connector on left side	1 pastilla con conector corto derecho 1 pastilla con conector largo derecho 1 pastilla con conector corto izquierdo 1 pastilla con conector largo izquierdo
PD/455	21338	7336 D456	D456	Daihatsu	1 inner pad with spring and wear indicator on right side 1 inner pad with spring and wear indicator on left side 2 outer pads	1 pastilla interna con resorte y indicador de desgaste derecho 1 pastilla interna con resorte y indicador de desgaste izquierdo 2 pastillas externas
PD/457	21312 / 21313 / 21314	7233 D374	D374	Honda, Rover	2 inner pads without wear indicator 1 outer pad with wear indicator on right side 1 outer pad with wear indicator on left side	2 pastillas internas sin indicador de desgaste 1 pastilla externa con indicador de desgaste derecho 1 pastilla externa con indicador de desgaste izquierdo
PD/458-B	21897	7401 D520	D520	Land Rover	3 pads without connector 1 pad with connector	3 pastillas sin conector 1 pastilla con conector
PD/463-B	21245	7294 D405	D405	Honda, Rover	3 pads without connector 1 pad with connector	3 pastillas sin conector 1 pastilla con conector
PD/464-B	21237	7398 D518	D518	Land Rover	3 pads without connector 1 pad with connector	3 pastillas sin conector 1 pastilla con conector
PD/465	20973 / 20974	8658 D1482	D1482	Citroën, Peugeot, Renault	2 inner pads 2 outer pads	2 pastillas internas 2 pastillas externas
PD/466	20778	7177 D227	D227	Audi, Seat, Volkswagen	4 equal pads	4 pastillas iguales
PD/467	20778	7143 D227	D227A	Audi, Volkswagen	4 equal pads	4 pastillas iguales
PD/468-A	20271	7086 D157	D157	Peugeot	2 inner pads without connector 2 outer pads with connector	2 pastillas internas sin conector 2 pastillas externas con conector
PD/469	21647	7365 D484	D484	Chrysler, Mitsubishi	2 inner pads without wear indicator 1 outer pad with wear indicator on right side 1 outer pad with wear indicator on left side	2 pastillas internas sin indicador de desgaste 1 pastilla externa con indicador de desgaste derecho 1 pastilla externa con indicador de desgaste izquierdo
PD/470	23242 / 23243 / 23244		D413	Ssang Yong	2 inner pads without wear indicator 1 outer pad with wear indicator on right side 1 outer pad with wear indicator on left side	2 pastillas internas sin indicador de desgaste 1 pastilla externa con indicador de desgaste derecho 1 pastilla externa con indicador de desgaste izquierdo
PD/471-A	23230 / 23231 / 23232 / 23233			Ssang Yong	1 inner pad on right side 1 inner pad on left side 1 outer pad on right side 1 outer pad on left side	1 pastilla interna izquierdo 1 pastilla interna izquierdo 1 pastilla externa derecho 1 pastilla externa izquierdo
PD/472	23302			Renault	4 equal pads	4 pastillas iguales
PD/473	23081 / 23082 / 23083	8247 D1137	D1137	Hyundai	2 inner pads without wear indicator 1 outer pad with wear indicator on right side 1 outer pad with wear indicator on left side	2 pastillas internas sin indicador de desgaste 1 pastilla externa con indicador de desgaste derecho 1 pastilla externa con indicador de desgaste izquierdo
PD/474	21519	7551 D671	D671	Land Rover	4 equal pads	4 pastillas iguales
PD/475	23234	7667 D797	D797	Daewoo	2 inner pads without wear indicator 1 outer pad with wear indicator on right side 1 outer pad with wear indicator on left side	2 pastillas internas sin indicador de desgaste 1 pastilla externa con indicador de desgaste derecho 1 pastilla externa con indicador de desgaste izquierdo
PD/477	23052			Chevrolet	1 pad with spring on right side 1 pad with spring on left side 1 pad with spring on right side and wear indicator 1 pad with spring on left side and wear indicator	1 pastilla con resorte derecho 1 pastilla con resorte izquierdo 1 pastilla con resorte derecho y con indicador de desgaste 1 pastilla con resorte izquierdo y con indicador de desgaste
PD/478	23238 / 23239 / 23240	8258 D1148	D1148	Hyundai	2 inner pads without wear indicator 1 outer pad with wear indicator on right side 1 outer pad with wear indicator on left side	2 pastillas internas sin indicador de desgaste 1 pastilla externa con indicador de desgaste derecho 1 pastilla externa con indicador de desgaste izquierdo
PD/479	23022	8371 D1253	D1253	Mercedes-Benz	4 equal pads	4 pastillas iguales
PD/480	23353	7763 D886	D886	Ford	4 equal pads	4 pastillas iguales
PD/481-A	23035 / 23036			Volkswagen	2 inner pads with spring and connector 2 outer pads without spring	2 pastillas internas con resorte y conector 2 pastillas externas sin resorte
PD/482	21964			Renault	2 inner pads with spring on right side 2 outer pads with spring on left side	2 pastillas internas con resorte derecho 2 pastillas externas con resorte izquierdo

FRAS-LE	WVA	FMSI	CODE FMSI		Set composition	Composición del Juego
PD/483-A	21147	7469 D590	D590	Alfa Romeo	2 inner pads without connector 2 outer pads with connector	2 pastillas internas sin conector 2 pastillas externas con conector
PD/484-A	21383			Alfa Romeo, Fiat	2 inner pads without connector 2 outer pads with connector	2 pastillas internas sin conector 2 pastillas externas con conector
PD/485		7616 D746	D746	Chrysler	2 inner pads with spring 1 outer pad with spring on right side 1 outer pad with spring on left side	2 pastillas internas con resorte 1 pastilla externas con resorte derecho 1 pastilla externas con resorte izquierdo
PD/486	23442	7641 D774	D774	Kia Motors	2 inner pads without wear indicator 1 outer pad with wear indicator on right side 1 outer pad with wear indicator on left side	2 pastillas internas sin indicador de desgaste 1 pastilla externa con indicador de desgaste derecho 1 pastilla externa con indicador de desgaste izquierdo
PD/487	21634 / 21635	7461 D581	D581	Volkswagen	4 equal pads	4 pastillas iguales
PD/488	21607	7286 D396	D396	BMW	2 inner pads with spring 2 outer pads without spring	2 pastillas internas con resorte 2 pastillas externas sin resorte
PD/489	21439	7523 D645	D645	Mercedes-Benz	4 equal pads	4 pastillas iguales
PD/490	20162			Citroën	4 equal pads	4 pastillas iguales
PD/491	23766	8335 D1215	D1215	Toyota	2 inner pads without wear indicator 1 outer pad with wear indicator on right side 1 outer pad with wear indicator on left side	2 pastillas internas sin indicador de desgaste 1 pastilla externa con indicador de desgaste derecho 1 pastilla externa con indicador de desgaste izquierdo
PD/492		7518A D642	D642	Chrysler	2 inner pads 2 outer pads	2 pastillas internas 2 pastillas externas
PD/493	21694	7497 D621	D621	Honda	2 inner pads without wear indicator 1 outer pad with wear indicator on right side 1 outer pad with wear indicator on left side	2 pastillas internas sin indicador de desgaste 1 pastilla externa con indicador de desgaste derecho 1 pastilla externa con indicador de desgaste izquierdo
PD/494	23842			Fiat	2 inner pads with spring 2 outer pads without spring	2 pastillas internas con resorte 2 pastillas externas sin resorte
PD/495	20887	7183 D280	D280	Volkswagen	2 inner pads 2 outer pads	2 pastillas internas 2 pastillas externas
PD/496	23348 / 23349 / 23350	7704 D831	D831	Toyota	2 inner pads without wear indicator 1 outer pad with wear indicator on right side 1 outer pad with wear indicator on left side	2 pastillas internas sin indicador de desgaste 1 pastilla externas con indicador de desgaste derecho 1 pastilla externas con indicador de desgaste izquierdo
PD/497	23202 / 23203	8289 D1175	D1175	Ford	2 inner pads with spring 2 outer pads without spring	2 pastillas internas con resorte 2 pastillas externas sin resorte
PD/498-A	23917	8318 D1198	D1198	Citroën, Fiat, Peugeot	2 inner pads without connector 2 outer pads with connector	2 pastillas internas sin conector 2 pastillas externas con conector
PD/499		7136 D215	D215	Buick, Cadillac, Chevrolet, Oldsmobile, Pontiac	1 inner pad with wear indicator on right side 1 inner pad with wear indicator on left side 2 outer pads	2 pastillas externas 1 pastilla interna con indicador de desgaste derecho 1 pastilla interna con indicador de desgaste izquierdo
PD/500	23879 / 23880	8334 D1214	D1214	Mitsubishi	3 pads without wear indicator 1 pad with wear indicator on right side	3 pastillas sin indicador de desgaste 1 pastilla con indicador de desgaste derecho
PD/501	23921	8794 D1582	D1582	Citroën, Fiat, Peugeot	4 equal pads	4 pastillas iguales
PD/502		7259 D369	D369	Cadillac, Chevrolet Truck Dodge Truck, GMC Truck	2 inner pads 1 outer pad with wear indicator on right side 1 outer pad with wear indicator on left side	2 pastillas internas 1 pastilla externa con indicador de desgaste derecho 1 pastilla externa con indicador de desgaste izquierdo
PD/503		8320 D1200	D1200	Honda	2 inner pads 1 outer pad with wear indicator on right side 1 outer pad with wear indicator on left side	2 pastillas internas 1 pastilla externa con indicador de desgaste derecho 1 pastilla externa con indicador de desgaste izquierdo
PD/504	21813	7403A D521 7406 D524	D521 D524	Chrysler, Dodge, Dodge Truck, Plymouth	2 inner pads 1 outer pad with wear indicator on right side 1 outer pad with wear indicator on left side	2 pastillas internas 1 pastilla externa con indicador de desgaste derecho 1 pastilla externa con indicador de desgaste izquierdo
PD/505	23954 / 23599	8333 D1213 8779 D1570	D1570 D1213	Citroën, Peugeot	4 equal pads	4 pastillas iguales
PD/506		7385 D506	D506	Buick, Chevrolet, Oldsmobile, Pontiac	2 inner pads 1 outer pad with wear indicator on right side 1 outer pad with wear indicator on left side	2 pastillas internas 1 pastilla externa con indicador de desgaste derecho 1 pastilla externa con indicador de desgaste izquierdo
PD/507	23332			Peugeot	2 right hand pads 2 left hand pads	2 pastillas derechas 2 pastillas izquierdas
PD/508		7554 D673	D673	Buick, Chevrolet, Oldsmobile, Pontiac	1 inner pad with wear indicator on right side 1 inner pad with wear indicator on left side 1 outer pad with wear indicator on right side 1 outer pad with wear indicator on left side	1 pastilla interna con indicador de desgaste derecho 1 pastilla interna con indicador de desgaste izquierdo 1 pastilla externa con indicador de desgaste derecho 1 pastilla externa con indicador de desgaste izquierdo
PD/509-A	23705/23706	8829 D1616	D1616	Fiat	2 pads with connector 2 pads without connector	2 pastillas con conector 2 pastillas sin conector
PD/509-B	23705 / 23706 / 23707	8829 D1616	D1616	Fiat	3 pads without connector 1 pad with connector	3 pastillas sin conector 1 pastilla con conector
PD/510		7623 D730	D730	Chrysler, Dodge, Plymouth	2 inner pads 2 outer pads	2 pastillas internas 2 pastillas externas
PD/511-B	23708 / 23709 / 23710			Fiat	3 pads without connector 1 pad with connector	3 pastillas sin conector 1 pastilla con conector
PD/512	23816	8336 D1216	D1216	Toyota	2 inner pads without wear indicator 1 outer pad with wear indicator on right side 1 outer pad with wear indicator on left side	2 pastillas internas sin indicador de desgaste 1 pastilla externa con indicador de desgaste derecho 1 pastilla externa con indicador de desgaste izquierdo
PD/513		7125A D249	D249	Ford Truck	2 inner pads with spring 2 outer pads without spring	2 pastillas internas con resorte 2 pastillas externas sin resorte
PD/514	23409			Citroën	4 equal pads	4 pastillas iguales
PD/515		7597 D730 7678 D730	D730	Chrysler, Dodge, Plymouth	2 inner pads 2 outer pads	2 pastillas internas 2 pastillas externas
PD/516	23669	8325 D1205	D1205	Nissan, Renault	4 equal pads	4 pastillas iguales

FRAS-LE	WVA	FMSI	CODE FMSI		Set composition	Composición del Juego
PD/517		7070A D154	D154	Buick, Cadillac, Chevrolet, Chevrolet Truck, GMC Truck, Oldsmobile, Pontiac	2 inner pads without wear indicator 1 outer pad with wear indicator on right side 1 outer pad with wear indicator on left side	2 pastillas internas sin indicador de desgaste 1 pastilla externa con indicador de desgaste derecho 1 pastilla externa con indicador de desgaste izquierdo
PD/518	23714			Fiat	4 equal pads	4 pastillas iguales
PD/519		7265 D376	D376	Buick, Chevrolet, Oldsmobile, Pontiac	2 inner pads with spring 1 outer pad with spring and wear indicator on right side 1 outer pad with spring and wear indicator on left side	2 pastillas internas con resorte 1 pastilla externa con resorte e indicador de desgaste derecho 1 pastilla externa con resorte e indicador de desgaste izquierdo
PD/520	23581	8555 D1437	D1437	Seat	4 equal pads	4 pastillas iguales
PD/521-E	21460			Citroën	4 equal pads	4 pastillas iguales
PD/522-E	20906			Peugeot	1 pad with short connector on right side 1 pad with long connector on right side 1 pad with short connector on left side 1 pad with long connector on left side	1 pastilla con conector corto derecho 1 pastilla con conector largo derecho 1 pastilla con conector corto izquierdo 1 pastilla con conector largo izquierdo
PD/523		788 D360 7264 D375	D375	Ford Truck	2 inner pads 2 outer pads	2 pastillas internas 2 pastillas externas
PD/524		7436 D557	D557	Ford Truck	2 inner pads with spring 2 outer pads	2 pastillas internas con resorte 2 pastillas externas
PD/525-A	21938	7715 D840	D840	Audi, Volkswagen	2 inner pads with spring and connector 2 outer pads without spring	2 pastillas internas con resorte y conector 2 pastillas externas sin resorte
PD/526	29116 / 29115			Mercedes-Benz	2 inner pads 2 outer pads	2 pastillas internas 2 pastillas externas
PD/527	21775 / 21776	7671 D799	D799	Toyota	2 inner pads with wear indicator on right side 2 outer pads with wear indicator on left side	2 pastillas internas con indicador de desgaste derecho 2 pastillas externas con indicador de desgaste izquierdo
PD/528	24024 / 24025 / 24026	7877 D976	D976	Toyota	2 inner pads without wear indicator 1 outer pad with wear indicator on right side 1 outer pad with wear indicator on left side	2 pastillas internas sin indicador de desgaste 1 pastilla externa con indicador de desgaste derecho 1 pastilla externa con indicador de desgaste izquierdo
PD/529	29022 / 29125 / 29222 / 29224 / 29277	8771 D1560	D1560	Meritor	4 equal pads	4 pastillas iguales
PD/530	23787	7719 D843	D843	Ford Truck, Mazda	2 inner pads with spring 2 outer pads without spring	2 pastillas internas con resorte 2 pastillas externas sin resorte
PD/531	23532	7716 D841	D841	Chrysler, Dodge	2 inner pads without wear indicator 1 outer pad with wear indicator on right side 1 outer pad with wear indicator on left side	2 pastillas internas sin indicador de desgaste 1 pastilla externa con indicador de desgaste derecho 1 pastilla externa con indicador de desgaste izquierdo
PD/532	21657	7389 D510	D510	Nissan	2 inner pads without wear indicator 1 outer pad with wear indicator on right side 1 outer pad with wear indicator on left side	2 pastillas internas sin indicador de desgaste 1 pastilla externa con indicador de desgaste derecho 1 pastilla externa con indicador de desgaste izquierdo
PD/533	29148 / 29115			Mercedes-Benz	2 inner pads 2 outer pads	2 pastillas internas 2 pastillas externas
PD/534		7876 D830	D830	Nissan	1 pad with wear indicator on left side 3 pads without wear indicator	1 pastilla con indicador de desgaste izquierdo 3 pastillas sin indicador de desgaste
PD/535	24277	8253 D1142	D1142	Hyundai	2 inner pads without wear indicator 1 outer pad with wear indicator on right side 1 outer pad with wear indicator on left side	2 pastillas internas sin indicador de desgaste 1 pastilla externa con indicador de desgaste derecho 1 pastilla externa con indicador de desgaste izquierdo
PD/536		7703 D830	D830A	Nissan	2 inner pads without wear indicator 1 outer pad with wear indicator on right side 1 outer pad with wear indicator on left side	2 pastillas internas sin indicador de desgaste 1 pastilla externa con indicador de desgaste derecho 1 pastilla externa con indicador de desgaste izquierdo
PD/537		7019A D123	D123	Dodge, Plymouth	2 inner pads 2 outer pads	2 pastillas internas 2 pastillas externas
PD/538	24066	7742 D867	D867	Mitsubishi	4 equal pads	4 pastillas iguales
PD/539		7054 D120	D120	Ford	4 equal pads	4 pastillas iguales
PD/540		7070C D183	D183	Buick, Chevrolet, Oldsmobile, Pontiac	2 inner pads without wear indicator 1 outer pad with wear indicator on right side 1 outer pad with wear indicator on left side	2 pastillas internas sin indicador de desgaste 1 pastilla externa con indicador de desgaste derecho 1 pastilla externa con indicador de desgaste izquierdo
PD/541		7081 D149	D149	Chevrolet Truck, GMC Truck	2 inner pads without wear indicator 1 outer pad with wear indicator on right side 1 outer pad with wear indicator on left side	2 pastillas internas sin indicador de desgaste 1 pastilla externa con indicador de desgaste derecho 1 pastilla externa con indicador de desgaste izquierdo
PD/542		7106A D257	D257	Ford	2 inner pads with spring 1 outer rigth pad with spring 1 outer left pad with spring	2 pastillas internas con resorte 1 pastilla externa derecha con resorte 1 pastilla externa izquierda con resorte
PD/543		7134A D220	D220	Chrysler, Dodge, Plymouth	2 inner pads with spring 2 outer pads without spring	2 pastillas internas con resorte 2 pastillas externas sin resorte
PD/544	20449	7155 D275	D275	Nissan	2 inner pads without wear indicator 1 outer pad with wear indicator on right side 1 outer pad with wear indicator on left side	2 pastillas internas sin indicador de desgaste 1 pastilla externa con indicador de desgaste derecho 1 pastilla externa con indicador de desgaste izquierdo
PD/545		7179 D269	D269	Dodge	2 inner pads 2 outer pads	2 pastillas internas 2 pastillas externas
PD/546		7192 D289	D289	Buick, Cadillac, Chevrolet, Oldsmobile, Pontiac	2 inner pads without wear indicator 1 outer pad with wear indicator on right side 1 outer pad with wear indicator on left side	2 pastillas internas sin indicador de desgaste 1 pastilla externa con indicador de desgaste derecho 1 pastilla externa con indicador de desgaste izquierdo
PD/547		7259 D368	D368	Chevrolet Truck, GMC Truck	2 inner pads without wear indicator 1 outer pad with wear indicator on right side 1 outer pad with wear indicator on left side	2 pastillas internas sin indicador de desgaste 1 pastilla externa con indicador de desgaste derecho 1 pastilla externa con indicador de desgaste izquierdo
PD/548		7260 D370	D370	Cadillac, Chevrolet Truck Dodge Truck, GMC Truck	2 inner pads without wear indicator 1 outer pad with wear indicator on right side 1 outer pad with wear indicator on left side	2 pastillas internas sin indicador de desgaste 1 pastilla externa con indicador de desgaste derecho 1 pastilla externa con indicador de desgaste izquierdo
PD/549	21012	7293 D404	D404	Hyundai, Mitsubishi	4 equal pads	4 pastillas iguales

FRAS-LE	WVA	FMSI	CODE FMSI		Set composition	Composición del Juego
PD/550	21561	7318 D430	D430	Infiniti, Nissan	2 inner pads without wear indicator 1 outer pad with wear indicator on right side 1 outer pad with wear indicator on left side	2 pastillas internas sin indicador de desgaste 1 pastilla externa con indicador de desgaste derecho 1 pastilla externa con indicador de desgaste izquierdo
PD/551		7339 D459 (small clip)	D459	Chevrolet Truck, Dodge Truck, GMC truck	2 inner pads without wear indicator 1 outer pad with wear indicator on right side 1 outer pad with wear indicator on left side	2 pastillas internas sin indicador de desgaste 1 pastilla externa con indicador de desgaste derecho 1 pastilla externa con indicador de desgaste izquierdo
PD/552		7339 D459 (big clip)	D459A	Chevrolet Truck, Dodge Truck, GMC truck	2 inner pads without wear indicator 1 outer pad with wear indicator on right side 1 outer pad with wear indicator on left side	2 pastillas internas sin indicador de desgaste 1 pastilla externa con indicador de desgaste derecho 1 pastilla externa con indicador de desgaste izquierdo
PD/553	21815 / 21817	7404A D522	D522	Chrysler, Dodge, Dodge Truck, Plymouth	2 inner pads without wear indicator 1 outer pad with wear indicator on right side 1 outer pad with wear indicator on left side	2 pastillas internas sin indicador de desgaste 1 pastilla externa con indicador de desgaste derecho 1 pastilla externa con indicador de desgaste izquierdo
PD/554	21721	7418 D537	D537	Acura, Honda	2 inner pads without wear indicator 1 outer pad with wear indicator on right side 1 outer pad with wear indicator on left side	2 pastillas internas sin indicador de desgaste 1 pastilla externa con indicador de desgaste derecho 1 pastilla externa con indicador de desgaste izquierdo
PD/555		7456 D576	D576	Mercury, Nissan	1 inner pad with spring and wear indicator on right side 1 inner pad with spring and wear indicator on left side 1 outer rigth pad with spring 1 outer left pad with spring	1 pastilla interna con resorte e indicador de desgaste derecho 1 pastilla interna con resorte e indicador de desgaste izquierdo 1 pastilla externa derecha con resorte 1 pastilla externa izquierda con resorte
PD/556		7502A D666	D666	Jeep	1 inner pad with spring and wear indicator on right side 1 inner pad with spring and wear indicator on left side 1 outer rigth pad with spring 1 outer left pad with spring	1 pastilla interna con resorte e indicador de desgaste derecho 1 pastilla interna con resorte e indicador de desgaste izquierdo 1 pastilla externa derecha con resorte 1 pastilla externa izquierda con resorte
PD/557		7108 D184	D184	International Truck	2 inner pads 2 outer pads	2 pastillas internas 2 pastillas externas
PD/558		7514 D663	D663	Ford, Mazda, Mercury	4 equal pads	4 pastillas iguales
PD/559		7535 D655	D655	Ford Truck	4 equal pads	4 pastillas iguales
PD/560		7543 D664	D664	Ford Truck	2 inner pads 1 outer rigth pad with spring 1 outer left pad with spring	2 pastillas internas 1 pastilla externa derecha con resorte 1 pastilla externa izquierda con resorte
PD/561	23420	7566 D691 7566 D855	D691 D855A	Infiniti, Nissan	2 inner pads without wear indicator 1 outer pad with wear indicator on right side 1 outer pad with wear indicator on left side	2 pastillas internas sin indicador de desgaste 1 pastilla externa con indicador de desgaste derecho 1 pastilla externa con indicador de desgaste izquierdo
PD/562		7910 D691 7910 D855	D691 D855	Infiniti, Nissan	2 inner pads without wear indicator 1 outer pad with wear indicator on right side 1 outer pad with wear indicator on left side	2 pastillas internas sin indicador de desgaste 1 pastilla externa con indicador de desgaste derecho 1 pastilla externa con indicador de desgaste izquierdo
PD/563	21497	7573 D465	D465A	Honda	2 inner pads without wear indicator 1 outer pad with wear indicator on right side 1 outer pad with wear indicator on left side	2 pastillas internas sin indicador de desgaste 1 pastilla externa con indicador de desgaste derecho 1 pastilla externa con indicador de desgaste izquierdo
PD/564	23358	7574 D699	D699	Buick, Cadillac, Chevrolet, Oldsmobile, Pontiac	2 inner pads without wear indicator 1 outer pad with wear indicator on right side 1 outer pad with wear indicator on left side	2 pastillas internas sin indicador de desgaste 1 pastilla externa con indicador de desgaste derecho 1 pastilla externa con indicador de desgaste izquierdo
PD/565		7576 D702	D702	Ford Truck, Lincoln	2 inner pads 2 outer pads with wear indicator on right side	2 pastillas internas 2 pastillas externas con indicador de desgaste derecho
PD/566		7584 D711	D711	Ford Truck, Lincoln	2 inner pads with spring 2 outer pads with spring	2 pastillas internas con resorte 2 pastillas externas con resorte
PD/567		7594 D727	D727	Chevrolet, Oldsmobile	2 inner pads without wear indicator 1 outer pad with wear indicator on right side 1 outer pad with wear indicator on left side	2 pastillas internas sin indicador de desgaste 1 pastilla externa con indicador de desgaste derecho 1 pastilla externa con indicador de desgaste izquierdo
PD/568	21818	7164A D259	D259	Dodge, Dodge Truck, Plymouth	2 inner pads 2 outer pads	2 pastillas internas 2 pastillas externas
PD/569		7627 D758	D758	Dodge Truck	4 equal pads	4 pastillas iguales
PD/570		7644 D777 7972 D1066	D1066	Ford Truck	4 equal pads	4 pastillas iguales
PD/571		7652 D784	D784	Am General, Cadillac, Chevrolet Truck, GMC Truck, Hummer	2 inner pads without wear indicator 1 outer pad with wear indicator on right side 1 outer pad with wear indicator on left side	2 pastillas internas sin indicador de desgaste 1 pastilla externa con indicador de desgaste derecho 1 pastilla externa con indicador de desgaste izquierdo
PD/572		7653 D785	D785	Am General, Cadillac, Chevrolet Truck, GMC Truck, Hummer	2 inner pads without wear indicator 1 outer pad with wear indicator on right side 1 outer pad with wear indicator on left side	2 pastillas internas sin indicador de desgaste 1 pastilla externa con indicador de desgaste derecho 1 pastilla externa con indicador de desgaste izquierdo
PD/573	23339	7661 D791	D791	Jeep	2 inner pads with spring 2 outer pads without spring	2 pastillas internas con resorte 2 pastillas externas sin resorte
PD/574		7662 D792	D792A	Chevrolet Truck, GMC Truck	2 inner pads without wear indicator 1 outer pad with wear indicator on right side 1 outer pad with wear indicator on left side	2 pastillas internas sin indicador de desgaste 1 pastilla externa con indicador de desgaste derecho 1 pastilla externa con indicador de desgaste izquierdo
PD/575	23635	7674 D803	D803	Ford Truck	4 equal pads	4 pastillas iguales
PD/576		7694 D821	D821	Dodge Truck	4 equal pads	4 pastillas iguales
PD/577		7794 D913	D913	Chevrolet, Pontiac, Saturn	2 inner pads without wear indicator 1 outer pad with wear indicator on right side 1 outer pad with wear indicator on left side	2 pastillas internas sin indicador de desgaste 1 pastilla externa con indicador de desgaste derecho 1 pastilla externa con indicador de desgaste izquierdo
PD/578		7707 D834	D834	Cadillac, Chevrolet Truck, GMC Truck	2 inner pads with wear indicator on right side 2 outer pads with wear indicator on left side	2 pastillas internas con indicador de desgaste derecho 2 pastillas externas con indicador de desgaste izquierdo
PD/580	23638	7732 D856 7988 D856	D856	Chrysler, Dodge, Jeep	2 inner pads with wear indicator on right side 2 outer pads with wear indicator on left side	2 pastillas internas con indicador de desgaste derecho 2 pastillas externas con indicador de desgaste izquierdo
PD/581	23640 / 23642	7733 D857	D857	Chrysler, Dodge	2 inner pads with spring 1 outer pad with wear indicator on right side 1 outer pad with wear indicator on left side	2 pastillas internas com resorte 1 pastilla externa con indicador de desgaste derecho 1 pastilla externa con indicador de desgaste izquierdo

FRAS-LE	WVA	FMSI	CODE FMSI		Set composition	Composición del Juego
PD/582	24036 / 24037 / 24038	7734 D858	D858	Chrysler, Dodge	2 inner pads with spring 1 outer rigth pad with spring 1 outer left pad with spring	2 pastillas internas con resorte 1 pastilla externa derecha con resorte 1 pastilla externa izquierda con resorte
PD/583		7774 D897	D897	Dodge Truck	4 pads with wear indicator on right side	4 pastillas con indicador de desgaste derecho
PD/584		7775 D898	D898	Dodge Truck	4 pads with wear indicator on left side	4 pastillas con indicador de desgaste izquierdo
PD/585	23814 / 23871 / 23872	7784 D905	D905	Infiniti, Nissan	2 inner pads without wear indicator 1 outer pad with wear indicator on right side 1 outer pad with wear indicator on left side	2 pastillas internas sin indicador de desgaste 1 pastilla externa con indicador de desgaste derecho 1 pastilla externa con indicador de desgaste izquierdo
PD/586	23279	7789 D910	D910	Ford, Jaguar	4 equal pads	4 pastillas iguales
PD/587	20218	780 D37	D37	Datsun, Nissan	2 right hand pads 2 left hand pads	2 pastillas derechas 2 pastillas izquierdas
PD/588		7863 D981	D981	Jeep	2 inner pads with spring 1 outer rigth pad with spring 1 outer left pad with spring	2 pastillas internas con resorte 1 pastilla externa derecha con resorte 1 pastilla externa izquierda con resorte
PD/589		7881 D974	D974A	Cadillac, Chevrolet Truck	2 pads with wear indicator on right side 2 pads with wear indicator on left side	2 pastillas con indicador de desgaste derecho 2 pastillas con indicador de desgaste izquierdo
PD/590		7915 D1011 7915 D1083	D1011 D1083	Ford Truck	4 equal pads	4 pastillas iguales
PD/591		7916 D1012	D1012	Ford Truck	2 inner pads with spring 1 outer rigth pad with spring 1 outer left pad with spring	2 pastillas internas con resorte 1 pastilla externa derecha con resorte 1 pastilla externa izquierda con resorte
PD/592-B	23882	7921 D1018	D1018	Audi, Volkswagen	3 pads without connector 1 pad with connector	3 pastillas sin conector 1 pastilla con conector
PD/593		7932 D1028	D1028	Chevrolet, Pontiac, Saturn	2 inner pads without wear indicator 1 outer pad with wear indicator on right side 1 outer pad with wear indicator on left side	2 pastillas internas sin indicador de desgaste 1 pastilla externa con indicador de desgaste derecho 1 pastilla externa con indicador de desgaste izquierdo
PD/594		7997 D1092	D1092	Cadillac, Chevrolet Truck, GMC Truck	2 inner pads without wear indicator 1 outer pad with wear indicator on right side 1 outer pad with wear indicator on left side	2 pastillas internas sin indicador de desgaste 1 pastilla externa con indicador de desgaste derecho 1 pastilla externa con indicador de desgaste izquierdo
PD/595	23463	8257 D1147	D1147	Nissan	4 equal pads	4 pastillas iguales
PD/596	21545	8305 D1187	D1187	Nissan	4 equal pads	4 pastillas iguales
PD/597		8310 D1191	D1191	Nissan	1 pad with wear indicator on left side 3 pads without wear indicator	1 pastilla con indicador de desgaste izquierdo 3 pastillas sin indicador de desgaste
PD/598	23241	8433 D1321	D1321	Daewoo	4 equal pads	4 pastillas iguales
PD/599	23557	7790 D911	D911	Ford, Jaguar	4 equal pads	4 pastillas iguales
PD/600	23417			Chevrolet	2 inner pads without wear indicator 1 outer pad with wear indicator on right side 1 outer pad with wear indicator on left side	2 pastillas internas sin indicador de desgaste 1 pastilla externa con indicador de desgaste derecho 1 pastilla externa con indicador de desgaste izquierdo
PD/601	23930			Renault	4 equal pads	4 pastillas iguales
PD/602	20669 / 21366	7571 D684	D684	Audi, Seat, Volkswagen	4 equal pads	4 pastillas iguales
PD/604	23258			Chevrolet	2 inner pads without wear indicator 1 outer pad with wear indicator on right side 1 outer pad with wear indicator on left side	2 pastillas internas sin indicador de desgaste 1 pastilla externa con indicador de desgaste derecho 1 pastilla externa con indicador de desgaste izquierdo
PD/605		7224 D326	D326	Ford Truck	2 inner pads with spring 2 outer pads	2 pastillas internas con resorte 2 pastillas externas
PD/606		7280A D392	D392	Chevrolet Truck, GMC Truck	2 inner pads without wear indicator 1 outer pad with wear indicator on right side 1 outer pad with wear indicator on left side	2 pastillas internas sin indicador de desgaste 1 pastilla externa con indicador de desgaste derecho 1 pastilla externa con indicador de desgaste izquierdo
PD/607	21537	7320 D433	D433	Chrysler, Mazda, Mitsubishi, Toyota	4 equal pads	4 pastillas iguales
PD/608		7330 D450	D450	Ford Truck	2 inner pads 2 outer pads	2 pastillas internas 2 pastillas externas
PD/609		7384 D505	D505	Buick, Cadillac, Chevrolet, Oldsmobile, Pontiac	1 inner pad with spring and wear indicator on right side 1 inner pad with spring and wear indicator on left side 2 outer pads	1 pastilla interna con resorte e indicador de desgaste derecho 1 pastilla interna con resorte e indicador de desgaste izquierdo 2 pastillas externas
PD/610	21755	7515 D637	D637	Ford, Mazda	2 inner pads without wear indicator 1 outer pad with wear indicator on right side 1 outer pad with wear indicator on left side	2 pastillas internas sin indicador de desgaste 1 pastilla externa con indicador de desgaste derecho 1 pastilla externa con indicador de desgaste izquierdo
PD/611	23400	7557 D677	D677	Suzuki	4 equal pads	4 pastillas iguales
PD/612	23032	7587 D716	D716	Toyota	2 inner pads with wear indicator 2 outer pads with wear indicator	2 pastillas internas con indicador de desgaste 2 pastillas externas con indicador de desgaste
PD/613	23558 / 21915	7589 D721	D721	Subaru	2 inner pads without wear indicator 1 outer pad with wear indicator on right side 1 outer pad with wear indicator on left side	2 pastillas internas sin indicador de desgaste 1 pastilla externa con indicador de desgaste derecho 1 pastilla externa con indicador de desgaste izquierdo
PD/614	23780	7590 D722	D722	Subaru	2 inner pads without wear indicator 1 outer pad with wear indicator on right side 1 outer pad with wear indicator on left side	2 pastillas internas sin indicador de desgaste 1 pastilla externa con indicador de desgaste derecho 1 pastilla externa con indicador de desgaste izquierdo
PD/615		7596 D729	D729	Chevrolet, Chevrolet Truck, GMC, Isuzu, Oldsmobile	2 inner pads without wear indicator 1 outer pad with wear indicator on right side 1 outer pad with wear indicator on left side	2 pastillas internas sin indicador de desgaste 1 pastilla externa con indicador de desgaste derecho 1 pastilla externa con indicador de desgaste izquierdo
PD/616	23593	7602 D733	D733	Mitsubishi	2 inner pads without wear indicator 1 outer pad with wear indicator on right side 1 outer pad with wear indicator on left side	2 pastillas internas sin indicador de desgaste 1 pastilla externa con indicador de desgaste derecho 1 pastilla externa con indicador de desgaste izquierdo
PD/617		7603 D734	D734	Mitsubishi Fuso	1 pad with left hole 1 pad with right hole 6 equal pads without holes	1 pastilla con agujero izquierdo 1 pastilla con agujero derecho 6 pastillas iguales sin agujeros
PD/618		7617 D748	D748	Ford, Lincoln, Mercury	4 equal pads	4 pastillas iguales

FRAS-LE	WVA	FMSI	CODE FMSI		Set composition	Composición del Juego
PD/619	23572	7637 D770	D770	Subaru	2 inner pads without wear indicator 1 outer pad with wear indicator on right side 1 outer pad with wear indicator on left side	2 pastillas internas sin indicador de desgaste 1 pastilla externa con indicador de desgaste derecho 1 pastilla externa con indicador de desgaste izquierdo
PD/620	23631 / 23336	7660 D790	D790	Jeep	2 inner pads with spring 1 outer pad with wear indicator on right side 1 outer pad with wear indicator on left side	2 pastillas internas con resorte 1 pastilla externa con indicador de desgaste derecho 1 pastilla externa con indicador de desgaste izquierdo
PD/621		8301 D1184	D1184	Toyota	4 equal pads	4 pastillas iguales
PD/622		7673 D802	D802	Ford Truck	4 equal pads	4 pastillas iguales
PD/623		7616 D820	D820	Dodge	2 inner pads with spring 2 outer pads with spring	2 pastillas internas con resorte 2 pastillas externas con resorte
PD/624		7697 D825	D825	Chevrolet Truck, GMC Truck, Isuzu	4 equal pads	4 pastillas iguales
PD/625		7698 D826	D826	Chevrolet Truck, GMC Truck, Isuzu	4 equal pads	4 pastillas iguales
PD/626		7699 D827	D827	Chevrolet Truck, GMC Truck, Isuzu	4 equal pads	4 pastillas iguales
PD/627		7694 D859	D859	Dodge Truck	2 inner pads without wear indicator 2 outer pads with wear indicator	2 pastillas internas sin indicador de desgaste 2 pastillas externas con indicador de desgaste
PD/628	23585	7738 D862	D862	Toyota	4 equal pads	4 pastillas iguales
PD/629	23656	7955 D1051	D1051	Toyota	2 inner pads without wear indicator 1 outer pad with wear indicator on right side 1 outer pad with wear indicator on left side	2 pastillas internas sin indicador de desgaste 1 pastilla externa con indicador de desgaste derecho 1 pastilla externa con indicador de desgaste izquierdo
PD/630	23569	7739 D864	D864	Hyundai	2 inner pads without wear indicator 1 outer pad with wear indicator on right side 1 outer pad with wear indicator on left side	2 pastillas internas sin indicador de desgaste 1 pastilla externa con indicador de desgaste derecho 1 pastilla externa con indicador de desgaste izquierdo
PD/631	23584	7741 D866	D866	Mitsubishi	4 equal pads	4 pastillas iguales
PD/632	23582	7743 D868	D868	Mitsubishi	2 inner pads with spring 2 outer pads without spring	2 pastillas internas con resorte 2 pastillas externas sin resorte
PD/633	24275 / 24411 / 24275	8815 D1601	D1601	Kia Motors	2 inner pads without wear indicator 1 outer pad with wear indicator on right side 1 outer pad with wear indicator on left side	2 pastillas internas sin indicador de desgaste 1 pastilla externa con indicador de desgaste derecho 1 pastilla externa con indicador de desgaste izquierdo
PD/634	24092 / 24178 / 24179			Kia Motors	2 inner pads without wear indicator 1 outer pad with wear indicator on right side 1 outer pad with wear indicator on left side	2 pastillas internas sin indicador de desgaste 1 pastilla externa con indicador de desgaste derecho 1 pastilla externa con indicador de desgaste izquierdo
PD/635	23891 / 23892 / 23893	7825 D924	D924	Hyundai, Kia Motors	2 inner pads without wear indicator 1 outer pad with wear indicator on right side 1 outer pad with wear indicator on left side	2 pastillas internas sin indicador de desgaste 1 pastilla externa con indicador de desgaste derecho 1 pastilla externa con indicador de desgaste izquierdo
PD/636		7839 D937	D937	Suzuki	1 pad with wear indicator on left side 3 pads without wear indicator	1 pastilla con indicador de desgaste izquierdo 3 pastillas sin indicador de desgaste
PD/637		7864 D965	D965	Dodge	2 inner pads with wear indicator on left side 2 outer pads without wear indicator	2 pastillas internas con indicador de desgaste izquierdo 2 pastillas externas sin indicador de desgaste
PD/638	24056	7870 D969	D969	Infiniti, Nissan	1 pad with wear indicator and spring on left side 1 pad with spring on left side 1 pad with wear indicator and spring on right side 1 pad with spring on right side	1 pastilla con indicador de desgaste y resorte izquierdo 1 pastilla resorte izquierdo 1 pastilla con indicador de desgaste y resorte derecho 1 pastilla resorte derecho
PD/639		7891 D989	D989	Chevrolet Truck, GMC Truck	2 inner pads with wear indicator on left side 2 outer pads without wear indicator	2 pastillas internas con indicador de desgaste izquierdo 2 pastillas externas sin indicador de desgaste
PD/640		7972 D1066	D1066	Ford Truck	4 equal pads	4 pastillas iguales
PD/641		7973 D1067	D1067	Ford Truck	4 equal pads	4 pastillas iguales
PD/642		7973 D1068	D1068	Ford Truck	4 equal pads	4 pastillas iguales
PD/643		7974 D1069	D1069	Ford Truck	4 equal pads	4 pastillas iguales
PD/644	23868 / 23869	7795 D914	D914	Honda	2 inner pads without wear indicator 1 outer pad with wear indicator on right side 1 outer pad with wear indicator on left side	2 pastillas internas sin indicador de desgaste 1 pastilla externa con indicador de desgaste derecho 1 pastilla externa con indicador de desgaste izquierdo
PD/645	24231 / 24232 / 24233	7418 D1086	D1086	Honda	2 inner pads with spring 1 outer pad with wear indicator on right side 1 outer pad with wear indicator on left side	2 pastillas internas con resorte 1 pastilla externa con indicador de desgaste derecho 1 pastilla externa con indicador de desgaste izquierdo
PD/646		8272 D1161	D1161	Ford	4 equal pads	4 pastillas iguales
PD/647		8277 D1164	D1164	Ford	4 equal pads	4 pastillas iguales
PD/648	23406 / 23407	8340 D1219	D1219	Citroën	4 equal pads	4 pastillas iguales
PD/649-E	23277			Citroën	1 pad with short connector on right side 1 pad with long connector on right side 1 pad with short connector on left side 1 pad with long connector on left side	1 pastilla con conector corto derecho 1 pastilla con conector largo derecho 1 pastilla con conector corto izquierdo 1 pastilla con conector largo izquierdo
PD/650-E	23273			Citroën	1 pad with short connector on right side 1 pad with long connector on right side 1 pad with short connector on left side 1 pad with long connector on left side	1 pastilla con conector corto derecho 1 pastilla con conector largo derecho 1 pastilla con conector corto izquierdo 1 pastilla con conector largo izquierdo
PD/651	23305			Citroën	4 equal pads	4 pastillas iguales
PD/652-B	23919 / 23920			Citroën, Fiat, Peugeot	3 pads without connector 1 pad with connector	3 pastillas sin conector 1 pastilla con conector
PD/653		7149 D236	D236	Ford Truck	4 equal pads	4 pastillas iguales
PD/654		7299 D411	D411	Ford Truck	2 inner pads with spring 2 outer pads	2 pastillas internas con resorte 2 pastillas externas
PD/655		7425 D675	D675	Chevrolet Truck, GMC Truck, Isuzu	2 inner pads without wear indicator 1 outer pad with wear indicator on right side 1 outer pad with wear indicator on left side	2 pastillas internas sin indicador de desgaste 1 pastilla externa con indicador de desgaste derecho 1 pastilla externa con indicador de desgaste izquierdo
PD/656		7527 D646		Nissan	4 equal pads	4 pastillas iguales

FRAS-LE	WVA	FMSI	CODE FMSI		Set composition	Composición del Juego
PD/657-A	21752 / 21904			Mercedes-Benz, Peugeot	2 pads with connector 2 pads without connector	2 pastillas com conector 2 pastillas sin conector
PD/659-A	21621	7850 D951	D951	Mercedes-Benz, Volkswagen	2 inner pads with spring and connector 2 outer pads without connector	2 pastillas con resorte y conector 2 pastilla sin conector
PD/660		7389 D510	D510A	Nissan	2 inner pads without wear indicator 1 outer pad with wear indicator on right side 1 outer pad with wear indicator on left side	2 pastillas internas sin indicador de desgaste 1 pastilla externa con indicador de desgaste derecho 1 pastilla externa con indicador de desgaste izquierdo
PD/661	29200	8383 D1268	D1268	Dodge Truck, Workhorse	4 equal pads	4 pastillas iguales
PD/662	29192	8430 D1316	D1316	Dodge Truck	4 equal pads	4 pastillas iguales
PD/663	29190	8431 D1317	D1317	Dodge Truck	4 equal pads	4 pastillas iguales
PD/664	29217	8432 D1318	D1318	Dodge Truck	4 equal pads	4 pastillas iguales
PD/665		7979 D1074	D1074	Kia Motors	2 inner pads without wear indicator 1 outer pad with wear indicator on right side 1 outer pad with wear indicator on left side	2 pastillas internas sin indicador de desgaste 1 pastilla externa con indicador de desgaste derecho 1 pastilla externa con indicador de desgaste izquierdo
PD/666	21553	7344 D464	D464	Hyundai, Kia Motors	2 inner pads without wear indicator 1 outer pad with wear indicator on right side 1 outer pad with wear indicator on left side	2 pastillas internas sin indicador de desgaste 1 pastilla externa con indicador de desgaste derecho 1 pastilla externa con indicador de desgaste izquierdo
PD/667	24068 / 24069 / 24070 / 23725 / 24726 / 24727 / 24728	7917 D1013	D1013	Hyundai, Kia Motors	2 inner pads without wear indicator 1 outer pad with wear indicator on right side 1 outer pad with wear indicator on left side	2 pastillas internas sin indicador de desgaste 1 pastilla externa con indicador de desgaste derecho 1 pastilla externa con indicador de desgaste izquierdo
PD/668	23993	8379 D1261	D1261	Kia Motors	2 inner pads without wear indicator 1 outer pad with wear indicator on right side 1 outer pad with wear indicator on left side	2 pastillas internas sin indicador de desgaste 1 pastilla externa con indicador de desgaste derecho 1 pastilla externa con indicador de desgaste izquierdo
PD/669		8780 D1571	D1571	Toyota	2 inner pads without wear indicator 1 outer pad with wear indicator on right side 1 outer pad with wear indicator on left side	2 pastillas internas sin indicador de desgaste 1 pastilla externa con indicador de desgaste derecho 1 pastilla externa con indicador de desgaste izquierdo
PD/672		8456 D1345	D1345	Nissan	2 inner pads without wear indicator 1 outer pad with wear indicator on right side 1 outer pad with wear indicator on left side	2 pastillas internas sin indicador de desgaste 1 pastilla externa con indicador de desgaste derecho 1 pastilla externa con indicador de desgaste izquierdo
PD/673-B	23711 / 23712	8745 D1536	D1536	Fiat	1 inner pad with spring and without connector 1 inner pad with spring and connector 2 outer pads	1 pastilla interna con resorte y sin conector 1 pastilla interna con resorte y conector 2 pastillas externas
PD/674		7693 D818	D818	Buick, Cadillac, Chevrolet, Oldsmobile, Pontiac	2 inner pads without wear indicator 1 outer pad with wear indicator on right side 1 outer pad with wear indicator on left side	2 pastillas internas sin indicador de desgaste 1 pastilla externa con indicador de desgaste derecho 1 pastilla externa con indicador de desgaste izquierdo
PD/675		7412 D723	D723	Mitsubishi	2 inner pads without wear indicator 1 outer pad with wear indicator on right side 1 outer pad with wear indicator on left side	2 pastillas internas sin indicador de desgaste 1 pastilla externa con indicador de desgaste derecho 1 pastilla externa con indicador de desgaste izquierdo
PD/676		8326 D1206	D1206	Troller	2 inner pads with spring 1 outer pad with wear indicator on right side 1 outer pad with wear indicator on left side	2 pastillas internas con resorte 1 pastilla externa con indicador de desgaste derecho 1 pastilla externa con indicador de desgaste izquierdo
PD/677		7387 D698	D698	Buick, Chevrolet, Oldsmobile, Pontiac	2 inner pads without wear indicator 1 outer pad with wear indicator on right side 1 outer pad with wear indicator on left side	2 pastillas internas sin indicador de desgaste 1 pastilla externa con indicador de desgaste derecho 1 pastilla externa con indicador de desgaste izquierdo
PD/678		7476 D598	D598	Lincoln	4 equal pads	4 pastillas iguales
PD/679		7082C D199	D199	Ford, Lincoln, Mercury	2 inner pads 2 outer pads	2 pastillas internas 2 pastillas externas
PD/680	20870 15,0	7153 D242	D242	Chevrolet, Geo, Toyota	4 equal pads	4 pastillas iguales
PD/681	24071	7939 D1036	D1036	Chevrolet, Suzuki	4 equal pads	4 pastillas iguales
PD/682		7223 D325	D325	Lexus, Toyota	2 inner pads without wear indicator 1 outer pad with wear indicator on right side 1 outer pad with wear indicator on left side	2 pastillas internas sin indicador de desgaste 1 pastilla externa con indicador de desgaste derecho 1 pastilla externa con indicador de desgaste izquierdo
PD/683		7272 D383	D383	Chrysler, Dodge, Eagle, Mitsubishi	2 inner pads without wear indicator 1 outer pad with wear indicator on right side 1 outer pad with wear indicator on left side	2 pastillas internas sin indicador de desgaste 1 pastilla externa con indicador de desgaste derecho 1 pastilla externa con indicador de desgaste izquierdo
PD/684		7146 D429	D429	Nissan	2 inner pads without wear indicator 1 outer pad with wear indicator on right side 1 outer pad with wear indicator on left side	2 pastillas internas sin indicador de desgaste 1 pastilla externa con indicador de desgaste derecho 1 pastilla externa con indicador de desgaste izquierdo
PD/685		8763 D1553	D1553	Honda	1 inner pad with spring and wear indicator on right side 1 inner pad with spring and wear indicator on left side 2 outer pads	1 pastilla interna con resorte e indicador de desgaste derecho 1 pastilla interna con resorte e indicador de desgaste izquierdo 2 pastillas externas
PD/686		7357 D476	D476	Lexus, Toyota	4 equal pads	4 pastillas iguales
PD/687		7386 D507	D507	Saturn	2 inner pads with wear indicator on right side 2 outer pads with wear indicator on left side	2 pastillas internas con indicador de desgaste derecho 2 pastillas externas con indicador de desgaste izquierdo
PD/688		7387 D508	D508	Buick, Cadillac, Chevrolet, Oldsmobile, Pontiac	2 inner pads with wear indicator on right side 2 outer pads with wear indicator on left side	2 pastillas internas con indicador de desgaste derecho 2 pastillas externas con indicador de desgaste izquierdo
PD/689		8781 D1572	D1572	Toyota	2 inner pads without wear indicator 1 outer pad with wear indicator on right side 1 outer pad with wear indicator on left side	2 pastillas internas sin indicador de desgaste 1 pastilla externa con indicador de desgaste derecho 1 pastilla externa con indicador de desgaste izquierdo
PD/690		7418 D536	D536	Acura, Honda, Isuzu	2 inner pads without wear indicator 1 outer pad with wear indicator on right side 1 outer pad with wear indicator on left side	2 pastillas internas sin indicador de desgaste 1 pastilla externa con indicador de desgaste derecho 1 pastilla externa con indicador de desgaste izquierdo
PD/691	21713	7421 D540	D540	Infiniti	2 inner pads without wear indicator 1 outer pad with wear indicator on right side 1 outer pad with wear indicator on left side	2 pastillas internas sin indicador de desgaste 1 pastilla externa con indicador de desgaste derecho 1 pastilla externa con indicador de desgaste izquierdo

FRAS-LE	WVA	FMSI	CODE FMSI		Set composition	Composición del Juego
PD/692		7533 D540	D540A	Nissan	2 inner pads without wear indicator 1 outer pad with wear indicator on right side 1 outer pad with wear indicator on left side	2 pastillas internas sin indicador de desgaste 1 pastilla externa con indicador de desgaste derecho 1 pastilla externa con indicador de desgaste izquierdo
PD/693		7460 D580	D580	Acura, Honda, Isuzu	2 inner pads without wear indicator 1 outer pad with wear indicator on right side 1 outer pad with wear indicator on left side	2 pastillas internas sin indicador de desgaste 1 pastilla externa con indicador de desgaste derecho 1 pastilla externa con indicador de desgaste izquierdo
PD/694		7478 D600	D600	Ford, Mercury	4 equal pads	4 pastillas iguales
PD/695	21947	7487 D606	D606	Lexus, Toyota	4 equal pads	4 pastillas iguales
PD/696		7489 D610	D610	Ford, Lincoln, Mercury	4 equal pads	4 pastillas iguales
PD/697		7384 D623	D623	Buick, Cadillac, Chevrolet, Oldsmobile, Pontiac	1 inner pad with spring and wear indicator on right side 1 inner pad with spring and wear indicator on left side 2 outer pads	1 pastilla interna con resorte e indicador de desgaste derecho 1 pastilla interna con resorte e indicador de desgaste izquierdo 2 pastillas externas
PD/698		7504 D627	D627	Ford	4 equal pads	4 pastillas iguales
PD/699		7524 D627	D627A	Ford	4 equal pads	4 pastillas iguales
PD/700		7318 D653	D653	Infiniti, Nissan, Suzuki	2 inner pads without wear indicator 1 outer pad with wear indicator on right side 1 outer pad with wear indicator on left side	2 pastillas internas sin indicador de desgaste 1 pastilla externa con indicador de desgaste derecho 1 pastilla externa con indicador de desgaste izquierdo
PD/701		7438A D658	D658	Chrysler, Dodge, Eagle	2 inner pads with spring 2 outer pads with spring	2 pastillas internas con resorte 2 pastillas externas con resorte
PD/702		7537 D659	D659	Ford, Lincoln, Mercury	4 equal pads	4 pastillas iguales
PD/703		7553 D672	D672	Toyota	2 inner pads without wear indicator 1 outer pad with wear indicator on right side 1 outer pad with wear indicator on left side	2 pastillas internas sin indicador de desgaste 1 pastilla externa con indicador de desgaste derecho 1 pastilla externa con indicador de desgaste izquierdo
PD/704		7555 D674	D674A	Ford, Lincoln	2 inner pads with spring 2 outer pads	2 pastillas internas con resorte 2 pastillas externas
PD/705		7610 D674	D674	Ford, Lincoln, Mercury	2 inner pads with spring 2 outer pads	2 pastillas internas con resorte 2 pastillas externas
PD/706	21725	7329 D700	D700	Hyundai	2 inner pads without wear indicator 1 outer pad with wear indicator on right side 1 outer pad with wear indicator on left side	2 pastillas internas sin indicador de desgaste 1 pastilla externa con indicador de desgaste derecho 1 pastilla externa con indicador de desgaste izquierdo
PD/707	23513	7581 D707	D707	Lexus, Toyota	4 equal pads	4 pastillas iguales
PD/708		7358 D477	D477	Jeep	1 inner pad on right side 1 inner pad on left side 1 outer pad on right side 1 outer pad on left side	1 pastilla interna derecho 1 pastilla interna izquierdo 1 pastilla externa derecho 1 pastilla externa izquierdo
PD/709		7387 D714	D714	Buick, Cadillac, Chevrolet, Oldsmobile, Pontiac, Saturn	2 inner pads without wear indicator 1 outer pad with wear indicator on right side 1 outer pad with wear indicator on left side	2 pastillas internas sin indicador de desgaste 1 pastilla externa con indicador de desgaste derecho 1 pastilla externa con indicador de desgaste izquierdo
PD/710		7591 D724	D724	Mitsubishi	4 equal pads	4 pastillas iguales
PD/711	24510 / 24511 / 24512	8381 D1264	D1264	Chevrolet Truck, Pontiac, Saturn Suzuki	4 equal pads	4 pastillas iguales
PD/712	23294	7611 D741	D741	Chevrolet, Toyota	4 equal pads	4 pastillas iguales
PD/713		7618 D749	D749	Chevrolet, Pontiac	2 inner pads without wear indicator 1 outer pad with wear indicator on right side 1 outer pad with wear indicator on left side	2 pastillas internas sin indicador de desgaste 1 pastilla externa con indicador de desgaste derecho 1 pastilla externa con indicador de desgaste izquierdo
PD/714		7620 D752	D752A	Chevrolet	2 inner pads without wear indicator 1 outer pad with wear indicator on right side 1 outer pad with wear indicator on left side	2 pastillas internas sin indicador de desgaste 1 pastilla externa con indicador de desgaste derecho 1 pastilla externa con indicador de desgaste izquierdo
PD/715	24498 / 24499 / 24500	8391 D1275	D1275	Chevrolet Truck, Pontiac, Saturn Suzuki	2 inner pads without wear indicator 1 outer pad with wear indicator on right side 1 outer pad with wear indicator on left side	2 pastillas internas sin indicador de desgaste 1 pastilla externa con indicador de desgaste derecho 1 pastilla externa con indicador de desgaste izquierdo
PD/716		7631 D763	D763	BMW	2 inner pads with spring 2 outer pads without spring	2 pastillas internas con resorte 2 pastillas externas sin resorte
PD/717		7632 D764	D764	Honda	2 inner pads without wear indicator 1 outer pad with wear indicator on right side 1 outer pad with wear indicator on left side	2 pastillas internas sin indicador de desgaste 1 pastilla externa con indicador de desgaste derecho 1 pastilla externa con indicador de desgaste izquierdo
PD/719		7656 D787	D787	Acura, Honda	2 inner pads without wear indicator 1 outer pad with wear indicator on right side 1 outer pad with wear indicator on left side	2 pastillas internas sin indicador de desgaste 1 pastilla externa con indicador de desgaste derecho 1 pastilla externa con indicador de desgaste izquierdo
PD/720		7700 D792	D792	Chevrolet Truck, GMC Truck	2 inner pads without wear indicator 1 outer pad with wear indicator on right side 1 outer pad with wear indicator on left side	2 pastillas internas sin indicador de desgaste 1 pastilla externa con indicador de desgaste derecho 1 pastilla externa con indicador de desgaste izquierdo
PD/721		7663 D793	D793	Acura, Honda	4 equal pads	4 pastillas iguales
PD/722		7675 D804	D804	Ford	2 inner pads 2 outer pads	2 pastillas internas 2 pastillas externas
PD/723	24014 / 24015	7940 D1037	D1037	Dodge, Jeep, Mitsubishi	2 inner pads without wear indicator 1 outer pad with wear indicator on right side 1 outer pad with wear indicator on left side	2 pastillas internas sin indicador de desgaste 1 pastilla externa con indicador de desgaste derecho 1 pastilla externa con indicador de desgaste izquierdo
PD/724		7687 D812	D812	Toyota	2 right hand pads 2 left hand pads	2 pastillas derechas 2 pastillas izquierdas
PD/725	23543	7688 D813	D813	Hyundai, Kia Motors	2 inner pads without wear indicator 1 outer pad with wear indicator on right side 1 outer pad with wear indicator on left side	2 pastillas internas sin indicador de desgaste 1 pastilla externa con indicador de desgaste derecho 1 pastilla externa con indicador de desgaste izquierdo
PD/726		7993 D1088	D1088	Honda	2 inner pads without wear indicator 1 outer pad with wear indicator on right side 1 outer pad with wear indicator on left side	2 pastillas internas sin indicador de desgaste 1 pastilla externa con indicador de desgaste derecho 1 pastilla externa con indicador de desgaste izquierdo

FRAS-LE	WVA	FMSI	CODE FMSI		Set composition	Composición del Juego
PD/727		7318 D815	D815	Infiniti	2 inner pads without wear indicator 1 outer pad with wear indicator on right side 1 outer pad with wear indicator on left side	2 pastillas internas sin indicador de desgaste 1 pastilla externa con indicador de desgaste derecho 1 pastilla externa con indicador de desgaste izquierdo
PD/728		7783 D815	D815A	Nissan	2 inner pads without wear indicator 1 outer pad with wear indicator on right side 1 outer pad with wear indicator on left side	2 pastillas internas sin indicador de desgaste 1 pastilla externa con indicador de desgaste derecho 1 pastilla externa con indicador de desgaste izquierdo
PD/729		7605 D819	D819	Saab, Saturn	2 inner pads with spring 1 outer pad with wear indicator on right side 1 outer pad with wear indicator on left side	2 pastillas internas con resorte 1 pastilla externa con indicador de desgaste derecho 1 pastilla externa con indicador de desgaste izquierdo
PD/730		7701 D828	D828	Toyota	4 equal pads	4 pastillas iguales
PD/731		8312 D1194	D1194	GM, Cadillac	2 inner pads without wear indicator 1 outer pad with wear indicator on right side 1 outer pad with wear indicator on left side	2 pastillas internas sin indicador de desgaste 1 pastilla externa con indicador de desgaste derecho 1 pastilla externa con indicador de desgaste izquierdo
PD/732		7720 D844	D844	Buick, Chevrolet, Oldsmobile, Pontiac	2 inner pads without wear indicator 1 outer pad with wear indicator on right side 1 outer pad with wear indicator on left side	2 pastillas internas sin indicador de desgaste 1 pastilla externa con indicador de desgaste derecho 1 pastilla externa con indicador de desgaste izquierdo
PD/733				Mahindra	4 equal pads	4 pastillas iguales
PD/734		8338 D866	D866A	Dodge, Jeep, Mitsubishi	2 inner pads without wear indicator 1 outer pad with wear indicator on right side 1 outer pad with wear indicator on left side	2 pastillas internas sin indicador de desgaste 1 pastilla externa con indicador de desgaste derecho 1 pastilla externa con indicador de desgaste izquierdo
PD/735		7740 D865	D865	Acura, Honda	2 inner pads without wear indicator 1 outer pad with wear indicator on right side 1 outer pad with wear indicator on left side	2 pastillas internas sin indicador de desgaste 1 pastilla externa con indicador de desgaste derecho 1 pastilla externa con indicador de desgaste izquierdo
PD/736		7907 D881	D881	Ford Truck, Mercury	2 inner pads with spring 2 outer pads	2 pastillas internas con resorte 2 pastillas externas
PD/737		7759 D882	D882	Buick, Chevrolet Truck, GMC Truck, Isuzu, Oldsmobile, Saab	4 equal pads	4 pastillas iguales
PD/738		7760 D883	D883	Buick, Chevrolet Truck, GMC Truck, Isuzu, Oldsmobile, Saab	4 equal pads	4 pastillas iguales
PD/739		7786 D885	D885	Toyota	4 equal pads	4 pastillas iguales
PD/740	24336	8330 D1210	D1210	Toyota	4 equal pads	4 pastillas iguales
PD/741		7777 D900	D900	Infiniti, Nissan	2 inner pads without wear indicator 1 outer pad with wear indicator on right side 1 outer pad with wear indicator on left side	2 pastillas internas sin indicador de desgaste 1 pastilla externa con indicador de desgaste derecho 1 pastilla externa con indicador de desgaste izquierdo
PD/742	24291	7782 D904	D904	Mitsubishi	4 equal pads	4 pastillas iguales
PD/743	23855	7785 D906	D906	Lexus, Toyota	4 equal pads	4 pastillas iguales
PD/744	24337	8331 D1211	D1211	Toyota	4 equal pads	4 pastillas iguales
PD/745	23928	7787 D908	D908	Lexus, Toyota	4 equal pads	4 pastillas iguales
PD/746		7788 D909	D909	Chevrolet Truck, GMC Truck	2 inner pads without wear indicator 1 outer pad with wear indicator on right side 1 outer pad with wear indicator on left side	2 pastillas internas sin indicador de desgaste 1 pastilla externa con indicador de desgaste derecho 1 pastilla externa con indicador de desgaste izquierdo
PD/747		7822 D921	D921	Cadillac	2 inner pads without wear indicator 1 outer pad with wear indicator on right side 1 outer pad with wear indicator on left side	2 pastillas internas sin indicador de desgaste 1 pastilla externa con indicador de desgaste derecho 1 pastilla externa con indicador de desgaste izquierdo
PD/748	23836	7824 D923	D923	Pontiac, Toyota	2 inner pads without wear indicator 1 outer pad with wear indicator on right side 1 outer pad with wear indicator on left side	2 pastillas internas sin indicador de desgaste 1 pastilla externa con indicador de desgaste derecho 1 pastilla externa con indicador de desgaste izquierdo
PD/749		7830 D929	D929	Saab	2 inner pads without wear indicator 1 outer pad with wear indicator on right side 1 outer pad with wear indicator on left side	2 pastillas internas sin indicador de desgaste 1 pastilla externa con indicador de desgaste derecho 1 pastilla externa con indicador de desgaste izquierdo
PD/750		7837 D934	D934	Ford Truck, Lincoln	2 inner pads with spring 2 outer pads	2 pastillas internas con resorte 2 pastillas externas
PD/751		7838 D935	D935	Ford Truck, Lincoln	2 inner pads with spring 1 outer pad with wear indicator on right side 1 outer pad with wear indicator on left side	2 pastillas internas con resorte 1 pastilla externa con indicador de desgaste derecho 1 pastilla externa con indicador de desgaste izquierdo
PD/752		7843 D941	D941	Hyundai	2 inner pads without wear indicator 1 outer pad with wear indicator on right side 1 outer pad with wear indicator on left side	2 pastillas internas sin indicador de desgaste 1 pastilla externa con indicador de desgaste derecho 1 pastilla externa con indicador de desgaste izquierdo
PD/753	24338	8332 D1212	D1212	Toyota	4 equal pads	4 pastillas iguales
PD/754		7851 D952	D952	Lincoln	2 inner pads without wear indicator 1 outer pad with wear indicator on right side 1 outer pad with wear indicator on left side	2 pastillas internas sin indicador de desgaste 1 pastilla externa con indicador de desgaste derecho 1 pastilla externa con indicador de desgaste izquierdo
PD/755	24083	7846 D945	D945	Jeep	4 equal pads	4 pastillas iguales
PD/756		7855 D956	D956	Chevrolet, Pontiac, Saturn	4 equal pads	4 pastillas iguales
PD/757		7866 D966	D966B	Dodge Truck	4 equal pads	4 pastillas iguales
PD/758		7868 D966	D966	Dodge Truck	4 equal pads	4 pastillas iguales
PD/759		7867 D967	D967	Chrysler	4 equal pads	4 pastillas iguales
PD/760		7707 D975	D975	Cadillac, Chevrolet Truck, GMC Truck	2 inner pads with wear indicator on right side 2 outer pads with wear indicator on left side	2 pastillas internas con indicador de desgaste derecho 2 pastillas externas con indicador de desgaste izquierdo
PD/761		7890 D988	D988	Chevrolet Truck, GMC Truck	1 inner pad with wear indicator 1 inner pad withou wear indicator 2 outer pads	1 pastilla interna con indicador de desgaste 1 pastilla interna sin indicador de desgaste 2 pastillas externas
PD/762		7897 D996	D996	Lexus, Toyota	4 equal pads	4 pastillas iguales
PD/763		7898 D997	D997	Chrysler	4 equal pads	4 pastillas iguales

FRAS-LE	WVA	FMSI	CODE FMSI		Set composition	Composición del Juego
PD/764		7906 D1005	D1005	Lexus, Toyota	4 equal pads	4 pastillas iguales
PD/765		7926 D1021	D1021	Ford, Mercury	4 equal pads	4 pastillas iguales
PD/766		7937 D1033	D1033	Chevrolet	2 inner pads without wear indicator 1 outer pad with wear indicator on right side 1 outer pad with wear indicator on left side	2 pastillas internas sin indicador de desgaste 1 pastilla externa con indicador de desgaste derecho 1 pastilla externa con indicador de desgaste izquierdo
PD/767	23723 / 23724	7947 D1044	D1044	Ford, Mazda, Volvo	2 inner pads with spring 2 outer pads	2 pastillas internas con resorte 2 pastilla externas
PD/768	24260	7976 D1071	D1071	Ford, Ford Truck, Jaguar, Mercury	4 equal pads	4 pastillas iguales
PD/769		7980 D1075	D1075	Buick, Chevrolet, Pontiac, Saturn	2 inner pads without wear indicator 1 outer pad with wear indicator on right side 1 outer pad with wear indicator on left side	2 pastillas internas sin indicador de desgaste 1 pastilla externa con indicador de desgaste derecho 1 pastilla externa con indicador de desgaste izquierdo
PD/770		7852 D953	D953	Lincoln	4 equal pads	4 pastillas iguales
PD/771	24529 / 24530	8728 D1519	D1519	Mitsubishi	3 pads without wear indicator 1 pad with wear indicator on right side	3 pastillas sin indicador de desgaste 1 pastilla con indicador de desgaste derecho
PD/772		7735 D752	D752	Oldsmobile, Pontiac	2 inner pads without wear indicator 1 outer pad with wear indicator on right side 1 outer pad with wear indicator on left side	2 pastillas internas sin indicador de desgaste 1 pastilla externa con indicador de desgaste derecho 1 pastilla externa con indicador de desgaste izquierdo
PD/773		7549 D436	D436	Toyota	2 inner pads without wear indicator 1 outer pad with wear indicator on right side 1 outer pad with wear indicator on left side	2 pastillas internas sin indicador de desgaste 1 pastilla externa con indicador de desgaste derecho 1 pastilla externa con indicador de desgaste izquierdo
PD/774	20215	7214A D52	D52	Cadillac, Checker, Chevrolet, Chevrolet Truck, GMC Truck, Jeep, Oldsmobile, Pontiac	2 inner pads without wear indicator 1 outer pad with wear indicator on right side 1 outer pad with wear indicator on left side	2 pastillas internas sin indicador de desgaste 1 pastilla externa con indicador de desgaste derecho 1 pastilla externa con indicador de desgaste izquierdo
PD/775		7863 D964	D964	Ford Truck, Jeep, Mercury	2 inner pads with spring 1 outer pad with wear indicator on right side 1 outer pad with wear indicator on left side	2 pastillas internas con resorte 1 pastilla externa con indicador de desgaste derecho 1 pastilla externa con indicador de desgaste izquierdo
PD/776		7593 D726	D726	Chevrolet Truck, GMC Truck, Isuzu, Oldsmobile	4 equal pads	4 pastillas iguales
PD/777		7677 D655	D655A	Ford Truck	4 equal pads	4 pastillas iguales
PD/778	21703	7351 D471	D471	Subaru	2 inner pads without wear indicator 1 outer pad with wear indicator on right side 1 outer pad with wear indicator on left side	2 pastillas internas sin indicador de desgaste 1 pastilla externa con indicador de desgaste derecho 1 pastilla externa con indicador de desgaste izquierdo
PD/779		7410 D529	D529A	Dodge Truck	2 inner pads with spring 1 outer pad with wear indicator on right side 1 outer pad with wear indicator on left side	2 pastillas internas con resorte 1 pastilla externa con indicador de desgaste derecho 1 pastilla externa con indicador de desgaste izquierdo
PD/780		7424A D544	D544	Ford. Lincoln, Mercury	2 inner pads with spring 1 outer pad with wear indicator on right side 1 outer pad with wear indicator on left side	2 pastillas internas con resorte 1 pastilla externa con indicador de desgaste derecho 1 pastilla externa con indicador de desgaste izquierdo
PD/781		7430 D551	D551	Mazda	4 equal pads	4 pastillas iguales
PD/782		7493 D617	D617	Acura, Honda	2 inner pads without wear indicator 1 outer pad with wear indicator on right side 1 outer pad with wear indicator on left side	2 pastillas internas sin indicador de desgaste 1 pastilla externa con indicador de desgaste derecho 1 pastilla externa con indicador de desgaste izquierdo
PD/783		7494 D618	D618	Volvo	2 inner pads 2 outer pads	2 pastillas internas 2 pastillas externas
PD/784		7495 D619	D619	Lexus, Toyota	2 inner pads without wear indicator 1 outer pad with wear indicator on right side 1 outer pad with wear indicator on left side	2 pastillas internas sin indicador de desgaste 1 pastilla externa con indicador de desgaste derecho 1 pastilla externa con indicador de desgaste izquierdo
PD/785		7520 D643	D643	Mazda	4 equal pads	4 pastillas iguales
PD/786	23073	7664 D794	D794	Volvo	2 inner pads with spring 2 outer pads	2 pastillas internas con resorte 2 pastilla externas
PD/787		7670 D798	D798	Mazda	4 equal pads	4 pastillas iguales
PD/788		7691 D817	D817	Scion, Toyota	4 equal pads	4 pastillas iguales
PD/789	23510 / 23511 / 23512	7695 D822	D822	Toyota	2 inner pads without wear indicator 1 outer pad with wear indicator on right side 1 outer pad with wear indicator on left side	2 pastillas internas sin indicador de desgaste 1 pastilla externa con indicador de desgaste derecho 1 pastilla externa con indicador de desgaste izquierdo
PD/790		7761 D884	D884	Toyota	4 equal pads	4 pastillas iguales
PD/791		7767 D889	D889	Kia Motors	2 inner pads without wear indicator 1 outer pad with wear indicator on right side 1 outer pad with wear indicator on left side	2 pastillas internas sin indicador de desgaste 1 pastilla externa con indicador de desgaste derecho 1 pastilla externa con indicador de desgaste izquierdo
PD/792		7823 D922	D922	Cadillac	2 inner pads without wear indicator 1 outer pad with wear indicator on right side 1 outer pad with wear indicator on left side	2 pastillas internas sin indicador de desgaste 1 pastilla externa con indicador de desgaste derecho 1 pastilla externa con indicador de desgaste izquierdo
PD/793		7895 D995	D995	Toyota	2 inner pads without wear indicator 1 outer pad with wear indicator on right side 1 outer pad with wear indicator on left side	2 pastillas internas sin indicador de desgaste 1 pastilla externa con indicador de desgaste derecho 1 pastilla externa con indicador de desgaste izquierdo
PD/794		7853 D954	D954	Hyundai, Kia Motors	2 inner pads without wear indicator 1 outer pad with wear indicator on right side 1 outer pad with wear indicator on left side	2 pastillas internas sin indicador de desgaste 1 pastilla externa con indicador de desgaste derecho 1 pastilla externa con indicador de desgaste izquierdo
PD/796	23482	7957 D973	D973	Mazda, Volvo, Ford	2 inner pads without wear indicator 1 outer pad with wear indicator on right side 1 outer pad with wear indicator on left side	2 pastillas internas sin indicador de desgaste 1 pastilla externa con indicador de desgaste derecho 1 pastilla externa con indicador de desgaste izquierdo
PD/797		7899 D998	D998	Chrysler	2 inner pads 2 outer pads	2 pastillas internas 2 pastillas externas
PD/798		7900 D999	D999	Buick, Pontiac	2 inner pads without wear indicator 1 outer pad with wear indicator on right side 1 outer pad with wear indicator on left side	2 pastillas internas sin indicador de desgaste 1 pastilla externa con indicador de desgaste derecho 1 pastilla externa con indicador de desgaste izquierdo

FRAS-LE	WVA	FMSI	CODE FMSI		Set composition	Composición del Juego
PD/799		7901 D1000	D1000	Pontiac	2 inner pads without wear indicator 1 outer pad with wear indicator on right side 1 outer pad with wear indicator on left side	2 pastillas internas sin indicador de desgaste 1 pastilla externa con indicador de desgaste derecho 1 pastilla externa con indicador de desgaste izquierdo
PD/800		7927 D1022	D1022	Ford, Mercury	4 equal pads	4 pastillas iguales
PD/801	24370 / 24594	7943 D1039	D1039	Chevrolet Truck, GMC Truck, Isuzu, Pontiac	2 inner pads without wear indicator 1 outer pad with wear indicator on right side 1 outer pad with wear indicator on left side	2 pastillas internas sin indicador de desgaste 1 pastilla externa con indicador de desgaste derecho 1 pastilla externa con indicador de desgaste izquierdo
PD/802		7945 D1041	D1041	Infiniti, Nissan	2 outer pads 2 inner pads	2 pastillas externas 2 pastillas internas
PD/803		7950 D1047	D1047	Ford Truck	2 inner pads with spring 2 outer pads	2 pastillas internas con resorte 2 pastillas externas
PD/804		7961 D1055	D1055	Ford Truck, Mazda, Mercury	2 inner pads with spring 2 outer pads with spring	2 pastillas internas con resorte 2 pastillas externas con resorte
PD/805		7962 D1056	D1056	Chrysler, Dodge	2 inner pads without wear indicator 1 outer pad with wear indicator on right side 1 outer pad with wear indicator on left side	2 pastillas internas sin indicador de desgaste 1 pastilla externa con indicador de desgaste derecho 1 pastilla externa con indicador de desgaste izquierdo
PD/806		7963 D1057	D1057	Chrysler	2 inner pads without wear indicator 1 outer pad with wear indicator on right side 1 outer pad with wear indicator on left side	2 pastillas internas sin indicador de desgaste 1 pastilla externa con indicador de desgaste derecho 1 pastilla externa con indicador de desgaste izquierdo
PD/807		7985 D1080	D1080	Jeep	2 inner pads without wear indicator 1 outer pad with wear indicator on right side 1 outer pad with wear indicator on left side	2 pastillas internas sin indicador de desgaste 1 pastilla externa con indicador de desgaste derecho 1 pastilla externa con indicador de desgaste izquierdo
PD/808		7991 D1084	D1084	Chrysler, Dodge Truck, Mitsubishi	4 equal pads	4 pastillas iguales
PD/809	24342	7994 D1089	D1089	Acura, Honda	2 inner pads without wear indicator 1 outer pad with wear indicator on right side 1 outer pad with wear indicator on left side	2 pastillas internas sin indicador de desgaste 1 pastilla externa con indicador de desgaste derecho 1 pastilla externa con indicador de desgaste izquierdo
PD/810		7999 D1093	D1093	Buick, Chevrolet Truck, Pontiac, Saturn	2 inner pads without wear indicator 1 outer pad with wear indicator on right side 1 outer pad with wear indicator on left side	2 pastillas internas sin indicador de desgaste 1 pastilla externa con indicador de desgaste derecho 1 pastilla externa con indicador de desgaste izquierdo
PD/811		8200 D1094	D1094	Nissan	3 pads without wear indicator 1 pad with wear indicator on left side	3 pastillas sin indicador de desgaste 1 pastilla con indicador de desgaste izquierdo
PD/812		8211 D1105	D1105	Suzuki	4 equal pads	4 pastillas iguales
PD/813		8218 D1114	D1114	Subaru	3 pads without wear indicator 1 pad with wear indicator on left side	3 pastillas sin indicador de desgaste 1 pastilla con indicador de desgaste izquierdo
PD/814		8269 D1159	D1159	Buick, Cadillac, Chevrolet	2 inner pads without wear indicator 1 outer pad with wear indicator on right side 1 outer pad with wear indicator on left side	2 pastillas internas sin indicador de desgaste 1 pastilla externa con indicador de desgaste derecho 1 pastilla externa con indicador de desgaste izquierdo
PD/815		8270 D1160	D1160	Chevrolet, Chevrolet Truck, Pontiac, Saturn	4 equal pads	4 pastillas iguales
PD/816		8277 D1192	D1192	Mazda	2 inner pads without wear indicator 1 outer pad with wear indicator on right side 1 outer pad with wear indicator on left side	2 pastillas internas sin indicador de desgaste 1 pastilla externa con indicador de desgaste derecho 1 pastilla externa con indicador de desgaste izquierdo
PD/817	24062 / 24063 / 24064 / 23234	7779 D1035	D1035	Chevrolet, Pontiac, Suzuki	2 inner pads without wear indicator 1 outer pad with wear indicator on right side 1 outer pad with wear indicator on left side	2 pastillas internas sin indicador de desgaste 1 pastilla externa con indicador de desgaste derecho 1 pastilla externa con indicador de desgaste izquierdo
PD/818	23974	8385 D1269	D1269	Chevrolet	4 equal pads	4 pastillas iguales
PD/819	23539	7640 D773	D773	Lexus, Toyota	4 equal pads	4 pastillas iguales
PD/1000	24557 / 24558	8212 D1107		Citroen, Land Rover, Peugeot	2 inner pads 2 outer pads	2 pastillas internas 2 pastillas externas
PD/1000-B	23587 / 23588 / 23589	8212 D1107	D1107	Audi, Volkswagen	1 inner pad with spring and connector 1 inner pad with spring 2 outer pads	1pastilla interna con resorte y connector 1pastilla interna con resorte 2 pastillas externas
PD/1001		7084A D153	D153	Chevrolet Truck	2 inner pads 2 outer pads	2 pastillas internas 2 pastillas externas
PD/1002		7276 D389	D389	Mazda	4 equal pads	4 pastillas iguales
PD/1003		7395 D394	D394	Jaguar	2 inner pads with spring 2 outer pads	2 pastillas internas con resorte 2 pastillas externas
PD/1004		7425 D546	D546	Chevrolet Truck, GMC Truck, Isuzu	2 inner pads without wear indicator 1 outer pad with wear indicator on right side 1 outer pad with wear indicator on left side	2 pastillas internas sin indicador de desgaste 1 pastilla externa con indicador de desgaste derecho 1 pastilla externa con indicador de desgaste izquierdo
PD/1005		7546 D668	D668	Nissan	2 inner pads without wear indicator 1 outer pad with wear indicator on right side 1 outer pad with wear indicator on left side	2 pastillas internas sin indicador de desgaste 1 pastilla externa con indicador de desgaste derecho 1 pastilla externa con indicador de desgaste izquierdo
PD/1006		7575 D701	D701	Nissan	4 equal pads	4 pastillas iguales
PD/1007-A	23193	7628 D760	D760	Mercedes-Benz	2 inner pads with spring and connector 2 outer pads spring	2 pastillas internas con resorte y connector 2 pastillas externas con resorte
PD/1008	23423	7676 D805	D805	Lincoln	4 equal pads	4 pastillas iguales
PD/1009	23271	7723 D847	D847	Mercedes-Benz	4 equal pads	4 pastillas iguales
PD/1010	23078	7724 D848	D848	Mercedes-Benz	4 equal pads	4 pastillas iguales
PD/1011	23144	7747 D872	D872	Mercedes-Benz	2 inner pads 2 outer pads	2 pastillas internas 2 pastillas externas
PD/1012-B	23190	7750 D875	D875	Mercedes-Benz	2 inner pads with spring 1 outer pad with spring and wear indicator on right side 1 outer pad with spring and wear indicator on left side	2 pastillas internas con resorte 1 pastilla externa con resorte y indicador de desgaste derecho 1 pastilla externa con resorte y indicador de desgaste izquierdo

FRAS-LE	WVA	FMSI	CODE FMSI		Set composition	Composición del Juego
PD/1013	21898	7753 D876	D876	Mercedes-Benz	2 inner pads 2 outer pads	2 pastillas internas 2 pastillas externas
PD/1014		7766 D888	D888	Infiniti, Nissan	2 right hand pads 2 left hand pads	2 pastillas derechas 2 pastillas izquierdas
PD/1015		7875 D974	D974	Cadillac	2 pads with wear indicator on right side 2 pads with wear indicator on left side	2 pastillas con indicador de desgaste derecho 2 pastillas con indicador de desgaste izquierdo
PD/1016		7885 D983	D983	Mercedes-Benz	8 equal pads	8 pastillas iguales
PD/1018		7944 D1040	D1040	Ford, Lincoln, Mercury	2 inner pads 2 outer pads	2 pastillas internas 2 pastillas externas
PD/1019		7918 D1015	D1015	Nissan	2 inner pads without wear indicator 1 outer pad with wear indicator on right side 1 outer pad with wear indicator on left side	2 pastillas internas sin indicador de desgaste 1 pastilla externas con indicador de desgaste derecho 1 pastilla externas con indicador de desgaste izquierdo
PD/1020		7965 D1058	D1058	Chrysler	4 equal pads	4 pastillas iguales
PD/1021		7975 D1070	D1070	Ford, Ford Truck, Mercury	4 equal pads	4 pastillas iguales
PD/1022	23945	8227 D1121	D1121	Mercedes-Benz	4 equal pads	4 pastillas iguales
PD/1023		8268 D1158	D1158	Ford Truck, Mercury	4 equal pads	4 pastillas iguales
PD/1024		8410 D1169	D1169	Chevrolet Truck, GMC Truck, Isuzu, Saab, Saturn	2 inner pads without wear indicator 1 outer pad with wear indicator on right side 1 outer pad with wear indicator on left side	2 pastillas internas sin indicador de desgaste 1 pastilla externas con indicador de desgaste derecho 1 pastilla externas con indicador de desgaste izquierdo
PD/1025		8405 D1288	D1288	Infiniti, Nissan	3 pads without wear indicator 1 pad with wear indicator on left side	3 pastillas sin indicador de desgaste 1 pastilla con indicador de desgaste izquierdo
PD/1026	24604 / 24605	8439 D1327	D1327	Dodge	2 inner pads without wear indicator 2 outer pads with wear indicator on right side	2 pastillas internas sin indicador de desgaste 2 pastillas externas con indicador de desgaste derecho
PD/1027	24353 / 24354	8784 D1574	D1574	Mazda	3 pads without wear indicator 1 pad with indicator on left side	3 pastillas sin indicador de desgaste 1 pastilla externa con indicador de desgaste izquierdo
PD/1028		8767 D1555	D1555	Volkswagen	4 equal pads	4 pastillas iguales
PD/1028-B	24484	8767 D1555	D1555	Ford	3 pads without connector 1 pad with connector	3 pastillas sin conector 1 pastilla con conector
PD/1029-A	24486	8701 D1502	D1502	Ford	2 inner pads with connector 2 outer pads without connector	2 pastillas internas con conector 2 pastilla externas sin conector
PD/1030	23914	8213 D1108	D1108	Audi, Volkswagen	4 equal pads	4 pastillas iguales
PD/1031		7127 D207	D207	Toyota	4 equal pads	4 pastillas iguales
PD/1032		7300 D412	D412	GM, Ford	2 inner pads without wear indicator 1 outer pad with wear indicator on right side 1 outer pad with wear indicator on left side	2 pastillas internas sin indicador de desgaste 1 pastilla externas con indicador de desgaste derecho 1 pastilla externas con indicador de desgaste izquierdo
PD/1033		7304A D417	D417	Ford	2 inner pads 2 outer pads	2 pastillas internas 2 pastillas externas
PD/1034		7306 D419	D419	Audi	2 inner pads without wear indicator 1 outer pad with wear indicator on right side 1 outer pad with wear indicator on left side	2 pastillas internas sin indicador de desgaste 1 pastilla externas con indicador de desgaste derecho 1 pastilla externas con indicador de desgaste izquierdo
PD/1035		7381 D501	D501	Toyota	4 equal pads	4 pastillas iguales
PD/1036		7388 D509	D509	Nissan	2 inner pads without wear indicator 1 outer pad with wear indicator on right side 1 outer pad with wear indicator on left side	2 pastillas internas sin indicador de desgaste 1 pastilla externas con indicador de desgaste derecho 1 pastilla externas con indicador de desgaste izquierdo
PD/1037		7390 D511	D511	Nissan	2 inner pads without wear indicator 1 outer pad with wear indicator on right side 1 outer pad with wear indicator on left side	2 pastillas internas sin indicador de desgaste 1 pastilla externas con indicador de desgaste derecho 1 pastilla externas con indicador de desgaste izquierdo
PD/1038		7427 D683	D683	BMW	4 equal pads	4 pastillas iguales
PD/1039		7468 D588	D588	Infiniti	2 inner pads with connector 2 outer pads without connector	2 pastillas internas con conector 2 pastilla externas sin conector
PD/1040		7475 D597	D597	Ford	2 inner pads 2 outer pads	2 pastillas internas 2 pastillas externas
PD/1041		7514 D636	D636	Ford	2 inner pads without wear indicator 1 outer pad with wear indicator on right side 1 outer pad with wear indicator on left side	2 pastillas internas sin indicador de desgaste 1 pastilla externas con indicador de desgaste derecho 1 pastilla externas con indicador de desgaste izquierdo
PD/1042-A	21486 / 21642	7560 D681	D681	BMW, Land Rover	2 inner pads with spring and connector 2 outer pads without spring and connector	2 pastillas internas con resorte y conector 2 pastillas externas sin resorte y conector
PD/1043	21664 / 21665	7583 D710	D710	Mercedes-Benz	2 inner pads without wear indicator 1 outer pad with wear indicator on right side 1 outer pad with wear indicator on left side	2 pastillas internas sin indicador de desgaste 1 pastilla externas con indicador de desgaste derecho 1 pastilla externas con indicador de desgaste izquierdo
PD/1044		7592 D946 7292 D947	D946 D947	BMW	2 inner pads 2 outer pads	2 pastillas internas 2 pastillas externas
PD/1045		7601 D493	D493	Land Rover	4 equal pads	4 pastillas iguales
PD/1046	21900	7608 D739	D739	Mercedes-Benz	4 equal pads	4 pastillas iguales
PD/1047		7621 D753	D753	Cadillac	2 inner pads without wear indicator 1 outer pad with wear indicator on right side 1 outer pad with wear indicator on left side	2 pastillas internas sin indicador de desgaste 1 pastilla externas con indicador de desgaste derecho 1 pastilla externas con indicador de desgaste izquierdo
PD/1048		7622 D754	D754	Cadillac	4 equal pads	4 pastillas iguales
PD/1049		7624 D755	D755	Mazda	2 inner pads without wear indicator 1 outer pad with wear indicator on right side 1 outer pad with wear indicator on left side	2 pastillas internas sin indicador de desgaste 1 pastilla externas con indicador de desgaste derecho 1 pastilla externas con indicador de desgaste izquierdo
PD/1050	21919	7647 D779	D779	Mercedes-Benz	4 equal pads	4 pastillas iguales
PD/1051		7665 D795	D795	Volvo	2 inner pads 2 outer pads	2 pastillas internas 2 pastillas externas

FRAS-LE	WVA	FMSI	CODE FMSI		Set composition	Composición del Juego
PD/1052	23178 / 23179	7702 D829	D829	Honda	2 inner pads without wear indicator 1 outer pad with wear indicator on right side 1 outer pad with wear indicator on left side	2 pastillas internas sin indicador de desgaste 1 pastilla externas con indicador de desgaste derecho 1 pastilla externas con indicador de desgaste izquierdo
PD/1053	21923	7712 D837	D837	Volvo, Mitsubishi	2 inner pads 2 outer pads	2 pastillas internas 2 pastillas externas
PD/1054	21861	7713 D838	D838	Volvo	2 inner pads without wear indicator 1 outer pad with wear indicator on right side 1 outer pad with wear indicator on left side	2 pastillas internas sin indicador de desgaste 1 pastilla externas con indicador de desgaste derecho 1 pastilla externas con indicador de desgaste izquierdo
PD/1055-A	23280	7725 D912	D912	Audi, Volkswagen	2 inner pads with connector 2 inner pads 4 outer pads	2 pastillas internas con conector 2 pastillas internas 4 pastillas externas
PD/1056		7749 D874	D874	Mercedes-Benz	2 inner pads without wear indicator 1 outer pad with wear indicator on right side 1 outer pad with wear indicator on left side	2 pastillas internas sin indicador de desgaste 1 pastilla externas con indicador de desgaste derecho 1 pastilla externas con indicador de desgaste izquierdo
PD/1057		7752 D1096	D1096	Dodge	4 equal pads	4 pastillas iguales
PD/1058		7841 D939	D939	Mini	2 inner pads 2 outer pads	2 pastillas internas 2 pastillas externas
PD/1059		7842 D1060	D1060	Mini	2 inner pads 2 outer pads	2 pastillas internas 2 pastillas externas
PD/1060		7859 D961	D961	Mitsubishi	2 inner pads 2 outer pads	2 pastillas internas 2 pastillas externas
PD/1061		7874 D1095	D1095	Volvo, Mazda, Pontiac	2 inner pads 2 outer pads	2 pastillas internas 2 pastillas externas
PD/1062		7883 D980	D980	Volvo	2 inner pads 2 outer pads	2 pastillas internas 2 pastillas externas
PD/1063		7904 D1003	D1003	Volvo	2 inner pads 2 outer pads	2 pastillas internas 2 pastillas externas
PD/1064		7911 D1007	D1007	Porsche, Volkswagen	4 equal pads	4 pastillas iguales
PD/1065		7935 D1030	D1030	GM	4 equal pads	4 pastillas iguales
PD/1066		7949 D1046	D1046	Ford	4 equal pads	4 pastillas iguales
PD/1067		7983 D1078	D1078	Subaru	2 inner pads 2 outer pads	2 pastillas internas 2 pastillas externas
PD/1068		7987 D1082	D1082	Ford	4 equal pads	4 pastillas iguales
PD/1069		8202 D1098	D1098	Land Rover	4 equal pads	4 pastillas iguales
PD/1070		8203 D1099	D1099	Land Rover	4 equal pads	4 pastillas iguales
PD/1071		8204 D1101	D1101	Nissan	3 pads without wear indicator 1 pad with wear indicator on left side	3 pastillas sin indicador de desgaste 1 pastilla con indicador de desgaste izquierdo
PD/1072		8206 D1100	D1100	Nissan	3 pads without wear indicator 1 pad with wear indicator	3 pastillas sin indicador de desgaste 1 pastilla con indicador de desgaste
PD/1073		8209 D1103	D1103	Acura, Honda	2 inner pads 2 outer pads	2 pastillas internas 2 pastillas externas
PD/1074		8225 D1119	D1119	Hummer	2 inner pads 2 outer pads	2 pastillas internas 2 pastillas externas
PD/1075		8226 D1120	D1120	Hummer	2 inner pads 2 outer pads	2 pastillas internas 2 pastillas externas
PD/1076		8231 D1124	D1124	Subaru	3 pads without wear indicator 1 pad with wear indicator	3 pastillas sin indicador de desgaste 1 pastilla con indicador de desgaste
PD/1077	24346	8307 D1188	D1188	Suzuki	2 inner pads 2 outer pads	2 pastillas internas 2 pastillas externas
PD/1078		8331 D1293	D1293	Toyota	4 equal pads	4 pastillas iguales
PD/1079		8366 D1014	D1014	Volkswagen	4 equal pads	4 pastillas iguales
PD/1080	24544	8377 D1258	D1258	Ford, Lincoln, Mazda	4 equal pads	4 pastillas iguales
PD/1081	24545	8378 D1259	D1259	Ford, Lincoln, Mazda	4 equal pads	4 pastillas iguales
PD/1082		8390 D1274	D1274	Dodge, Jeep	2 inner pads without wear indicator 1 outer pad with wear indicator on right side 1 outer pad with wear indicator on left side	2 pastillas internas sin indicador de desgaste 1 pastilla externas con indicador de desgaste derecho 1 pastilla externas con indicador de desgaste izquierdo
PD/1083		8394 D1278	D1278	Ford, Lincoln	2 inner pads 2 outer pads	2 pastillas internas 2 pastillas externas
PD/1084		8419 D1303	D1303	Toyota	2 inner pads 2 outer pads	2 pastillas internas 2 pastillas externas
PD/1085		8420 D1304	D1304	Toyota	4 equal pads	4 pastillas iguales
PD/1086		8440 D1328	D1328	Ford	4 equal pads	4 pastillas iguales
PD/1087		8441 D1329	D1329	Ford	4 equal pads	4 pastillas iguales
PD/1088		8447 D1336	D1336	Acura, Honda	2 inner pads 2 outer pads	2 pastillas internas 2 pastillas externas
PD/1089		8487 D1376	D1376	Lincoln	4 equal pads	4 pastillas iguales
PD/1090		8488 D1377	D1377	Lincoln	4 equal pads	4 pastillas iguales
PD/1091-A	24485	8736 D1528	D1528	Ford	2 inner pads with spring and connector 2 outer pads without spring and connector	2 pastillas internas con resorte y conector 2 pastillas externas sin resorte y conector
PD/1092	23966 / 23987 / 23988	8505 D1397	D1397	Hyundai, Kia Motors	2 inner pads without wear indicator 1 outer pad with wear indicator on right side 1 outer pad with wear indicator on left side	2 pastillas internas sin indicador de desgaste 1 pastilla externas con indicador de desgaste derecho 1 pastilla externas con indicador de desgaste izquierdo

FRAS-LE	WVA	FMSI	CODE FMSI		Set composition	Composición del Juego
PD/1093	24320 / 24321 / 24322	8267 D1157	D1157	Hyundai, Kia Motors	2 inner pads without wear indicator 1 outer pad with wear indicator on right side 1 outer pad with wear indicator on left side	2 pastillas internas sin indicador de desgaste 1 pastilla externas con indicador de desgaste derecho 1 pastilla externas con indicador de desgaste izquierdo
PD/1094-A	24007			Mercedes-Benz	2 inner pads without wear indicator 1 outer pad with wear indicator on right side 1 outer pad with wear indicator on left side	2 pastillas internas sin indicador de desgaste 1 pastilla externas con indicador de desgaste derecho 1 pastilla externas con indicador de desgaste izquierdo
PD/1095-A	24008	8828 D1615	D1615	Mercedes-Benz	2 inner pads 2 outer pads	2 pastillas internas 2 pastillas externas
PD/1096	21978 / 21979 / 21980 / 21981	8254 D1499	D1499	Renault	2 inner pads with spring 2 outer pads with spring	2 pastillas internas con resorte 2 pastillas externas con resorte
PD/1097	24283 / 24284 / 24285	8653 D1454	D1454	Ford	2 inner pads without wear indicator 1 outer pad with wear indicator on right side 1 outer pad with wear indicator on left side	2 pastillas internas sin indicador de desgaste 1 pastilla externas con indicador de desgaste derecho 1 pastilla externas con indicador de desgaste izquierdo
PD/1098	25209 / 25210	8776 D1567	D1567	Toyota	4 equal pads	4 pastillas iguales
PD/1099-B	24468 / 24469	8689 D1489	D1489	Ford	3 pads without connector 1 pad with connector	3 pastillas sin conector 1 pastilla con conector
PD/1100		8768 D1556	D1556	Volkswagen	2 inner pads with spring 2 outer pads with spring	2 pastillas internas con resorte 2 pastillas externas con resorte
PD/1101	25034 / 25035 / 25036	8730 D1522	D1522	GM	2 inner pads without wear indicator 1 outer pad with wear indicator on right side 1 outer pad with wear indicator on left side	2 pastillas internas sin indicador de desgaste 1 pastilla externa con indicador de desgaste derecho 1 pastilla externa con indicador de desgaste izquierdo
PD/1102	25096 / 25097 / 25098	8668 D1468	D1468	GM	2 inner pads without wear indicator 1 outer pad with wear indicator on right side 1 outer pad with wear indicator on left side	2 pastillas internas sin indicador de desgaste 1 pastilla externas con indicador de desgaste derecho 1 pastilla externas con indicador de desgaste izquierdo
PD/1103				Ford	2 inner pads with spring 2 outer pads	2 pastillas internas con resorte 2 pastillas externas sin resorte
PD/1131	20031	7186 D332	D332	Mazda	4 equal pads	4 pastillas iguales
PD/1159	20941 / 21028	7311 D423	D423	Mercedes-Benz	4 equal pads	4 pastillas iguales
PD/1232-B	23801 / 23912 / 23913	8220 D915	D915	Audi / Volkswagen	1 inner pad with spring 1 inner pad with spring and connector 2 outer pads with spring	1 pastilla interna con resorte 1 pastilla interna con resorte y conector 2 pastillas externas con resorte
PD/1277	24375 / 24376	8306 D1125	D1125	Hyundai	4 equal pads	4 pastillas iguales
PD/1279	24317 / 24318 / 24319	8266 D1156	D1156	Hyundai, Kia Motors	2 inner pads without wear indicator 1 outer pad with wear indicator on right side 1 outer pad with wear indicator on left side	2 pastillas internas sin indicador de desgaste 1 pastilla externa con indicador de desgaste derecho 1 pastilla externa con indicador de desgaste izquierdo
PD/1287	24351 / 24352 / 24568 / 24569	8322 D1202	D1202	Hyundai, Kia Motors	4 equal pads	4 pastillas iguales
PD/1288	23984	8324 D1204	D1204	Mini	2 inner pads 2 outer pads	2 pastillas internas 2 pastillas externas
PD/1296	24501	8614 D1295	D1295	Hyundai, Kia Motors	4 equal pads	4 pastillas iguales
PD/1298		8417 D1301	D1301	Hyundai	4 equal pads	4 pastillas iguales
PD/1299		8418 D1302	D1302	Hyundai, Kia Motors	4 equal pads	4 pastillas iguales
PD/1301	24123 / 24214	8421 D1306	D1306	Citroen, Land Rover, Peugeot	2 inner pads with spring 2 outer pads	2 pastillas internas con resorte 2 pastillas externas sin resorte
PD/1302		8423 D1308	D1308	BMW	2 inner pads with spring 2 outer pads	2 pastillas internas con resorte 2 pastillas externas sin resorte
PD/1303		8424 D1309	D1309	MINI	2 inner pads 2 outer pads	2 pastillas internas 2 pastillas externas
PD/1320	24610 / 24611 / 24612	8463 D1354	D1354	Toyota	1 inner pad with wear indicator on right side 1 inner pad with wear indicator on left side 2 outer pads	1 pastilla interna con indicador de desgaste derecho 1 pastilla interna con indicador de desgaste izquierdo 2 pastillas externas
PD/1330	23662			Asia Motors, Chana, Chery, EFFA	4 equal pads	4 pastillas iguales
PD/1331	23601		D1492	Alfa Romeu, Fiat	4 equal pads	4 pastillas iguales
PD/1332		8429 D1314	D1314	Ford, Land Rover	4 equal pads	4 pastillas iguales
PD/1333		8467 D1358	D1358	Mercedes-Benz	4 equal pads	4 pastillas iguales
PD/1334		8506 D1398	D1398	Hyundai	2 inner pads without wear indicator 1 outer pad with wear indicator on right side 1 outer pad with wear indicator on left side	2 pastillas internas sin indicador de desgaste 1 pastilla externa con indicador de desgaste derecho 1 pastilla externa con indicador de desgaste izquierdo
PD/1335	24150	8833 D1621	D1621	Citroen, Peugeot	4 equal pads	4 pastillas iguales
PD/1337		7286 D1171 7286 D1267	D1171 D1267	BMW	2 inner pads with spring 2 outer pads	2 pastillas internas con resorte 2 pastillas externas sin resorte
PD/1338	24540			Citroen, Peugeot	4 equal pads	4 pastillas iguales
PD/1339		8368 D1250	D1250	MERCEDES-BENS	4 equal pads	4 pastillas iguales
PD/1341	24488 / 24489 / 24490	8414 D1297	D1297	Hyundai	2 inner pads without wear indicator 1 outer pad with wear indicator on right side 1 outer pad with wear indicator on left side	2 pastillas internas sin indicador de desgaste 1 pastilla externa con indicador de desgaste derecho 1 pastilla externa con indicador de desgaste izquierdo
PD/1342	23540			FORD MAZDA	4 equal pads 2 with wear indicator clip	4 pastillas iguales 2 com indicador de desgaste clip
PD/1343		8549 D1432	D1432	Kia Motors	2 inner pads without wear indicator 1 outer pad with wear indicator on right side 1 outer pad with wear indicator on left side	2 pastillas internas sin indicador de desgaste 1 pastilla externa con indicador de desgaste derecho 1 pastilla externa con indicador de desgaste izquierdo
PD/1344	23881	8466 D1357	D1357	Mercedes-Benz	4 equal pads	4 pastillas iguales
PD/1345-E	24133 / 24174	8362 D1245	D1245	Peugeot	2 inner pads with connector 2 outer pads with connector	2 pastillas internas con conector 2 pastillas externas con conector

FRAS-LE	WVA	FMSI	CODE FMSI		Set composition	Composición del Juego
PD/1346			D1641	Volkswagen	2 inner pads with spring 2 outer pads	2 pastillas internas con resorte 2 pastillas externas
PD/1347	23974 / 25295 / 25296		D1702	GM	2 inner pads without wear indicator 1 outer pad with wear indicator on right side 1 outer pad with wear indicator on left side	2 pastillas internas sin indicador de desgaste 1 pastilla externas con indicador de desgaste derecho 1 pastilla externas con indicador de desgaste izquierdo
PD/1348		8751 D1543	D1543	Hyundai	2 inner pads without wear indicator 1 outer pad with wear indicator on right side 1 outer pad with wear indicator on left side	2 pastillas internas sin indicador de desgaste 1 pastilla externa con indicador de desgaste derecho 1 pastilla externa con indicador de desgaste izquierdo
PD/1350	23961	8421 D1130	D1130	PORSCHE	1 inner pad with wear indicator on right side 1 inner pad with wear indicator on left side 2 outer pads	1 pastilla interna con indicador de desgaste derecho 1 pastilla interna con indicador de desgaste izquierdo 2 pastillas externas
PD/1351		8595 D1444	D1444	Hyundai, Kia Motors	2 inner pads without wear indicator 1 outer pad with wear indicator on right side 1 outer pad with wear indicator on left side	2 pastillas internas sin indicador de desgaste 1 pastilla externa con indicador de desgaste derecho 1 pastilla externa con indicador de desgaste izquierdo
PD/1352		8400 D1202	D1202	Hyundai	2 inner pads without wear indicator 1 outer pad with wear indicator on right side 1 outer pad with wear indicator on left side	2 pastillas internas sin indicador de desgaste 1 pastilla externa con indicador de desgaste derecho 1 pastilla externa con indicador de desgaste izquierdo
PD/1353		8402 D1285	D1285	JEEP	4 equal pads	4 pastillas iguales
PD/1354		8655 D1455	D1455	JEEP	2 inner pads with spring 1 outer pad with wear indicator on right side 1 outer pad with wear indicator on left side	2 pastillas internas sin indicador de desgaste 1 pastilla externa con indicador de desgaste derecho 1 pastilla externa con indicador de desgaste izquierdo
PD/1355		8370 D1252	D1252	SMART	2 inner pads without wear indicator 1 outer pad with wear indicator on right side 1 outer pad with wear indicator on left side	2 pastillas internas sin indicador de desgaste 1 pastilla externa con indicador de desgaste derecho 1 pastilla externa con indicador de desgaste izquierdo
PD/1356		8428 D1445	D1445	Hyundai, Kia Motors	2 inner pads without wear indicator 1 outer pad with wear indicator on right side 1 outer pad with wear indicator on left side	2 pastillas internas sin indicador de desgaste 1 pastilla externa con indicador de desgaste derecho 1 pastilla externa con indicador de desgaste izquierdo
PD/1357		8698 D1498	D1498	JEEP	2 inner pads with spring 1 outer pad with wear indicator on right side 1 outer pad with wear indicator on left side	2 pastillas internas sin indicador de desgaste 1 pastilla externa con indicador de desgaste derecho 1 pastilla externa con indicador de desgaste izquierdo
PD/1358		8455 D1344	D1344	Toyota	4 equal pads	4 pastillas iguales
PD/1359	24609 / 24597 / 24598	8775 D1566	D1566	Hyundai	2 inner pads without wear indicator 1 outer pad with wear indicator on right side 1 outer pad with wear indicator on left side	2 pastillas internas sin indicador de desgaste 1 pastilla externas con indicador de desgaste derecho 1 pastilla externas con indicador de desgaste izquierdo
PD/1364	25268 / 25269 / 25270	8801 D1590	D1590	GM	2 inner pads without wear indicator 1 outer pad with wear indicator on right side 1 outer pad with wear indicator on left side	2 pastillas internas sin indicador de desgaste 1 pastilla externa con indicador de desgaste derecho 1 pastilla externa con indicador de desgaste izquierdo
PD/1365	24724 / 24725 / 24726	8804 D1592	D1592	Nissan	2 inner pads without wear indicator 1 outer pad with wear indicator on right side 1 outer pad with wear indicator on left side	2 pastillas internas sin indicador de desgaste 1 pastilla externa con indicador de desgaste derecho 1 pastilla externa con indicador de desgaste izquierdo
PD/1366		8575 D1439	D1439	Hyundai, Kia Motors	2 inner pads without wear indicator 1 outer pad with wear indicator on right side 1 outer pad with wear indicator on left side	2 pastillas internas sin indicador de desgaste 1 pastilla externa con indicador de desgaste derecho 1 pastilla externa con indicador de desgaste izquierdo
PD/1368	25337 / 25338 / 25339	8428 D1594	D1594	Hyundai	2 inner pads without wear indicator 1 outer pad with wear indicator on right side 1 outer pad with wear indicator on left side	2 pastillas internas sin indicador de desgaste 1 pastilla externa con indicador de desgaste derecho 1 pastilla externa con indicador de desgaste izquierdo
PD/1369	24606 / 25214	8785 D1547	D1547	Porsche	4 equal pads	4 pastillas iguales
PD/1370	23313 / 24255			BMW	2 inner pads with spring 2 outer pads without spring	2 pastillas internas con resorte 2 pastilla externas sin resorte
PD/1371				Jac Motors	2 inner pads without wear indicator 1 outer pad with wear indicator on right side 1 outer pad with wear indicator on left side	2 pastillas internas sin indicador de desgaste 1 pastilla externa con indicador de desgaste derecho 1 pastilla externa con indicador de desgaste izquierdo
PD/1372				Jac Motors	2 inner pads 2 outer pads	2 pastillas internas 2 pastillas externas
PD/1373	23962 / 23963 / 25181			Suzuki	3 pads without wear indicator 1 pad wear indicator	3 pastillas sin indicador de desgaste 1 pastilla con indicador
PD/1374	25158 / 25159	8758 D1549	D1549	AUDI	4 equal pads	4 pastillas iguales
PD/1376	24709 / 24710			Renault	2 inner pads with spring 2 outer pads without spring	2 pastillas internas con resorte 2 pastilla externas sin resorte
PD/1377	24914 / 24538	8844 D1627	D1627	Renault	2 inner pads 2 outer pads	2 pastillas internas 2 pastillas externas
PD/1378	23200 / 23201	8860 D1460	D1460	Ford	2 inner pads with spring 2 outer pads without spring	2 pastillas internas con resorte 2 pastilla externas sin resorte
PD/1379	20104	8657 D1457	D1457	Vag	4 equal pads	4 pastillas iguales
PD/1380	23258 / 23259 23262 / 23263	8661 D1461	D1461	GM	2 inner pads without wear indicator 1 outer pad with wear indicator on right side 1 outer pad with wear indicator on left side	2 pastillas internas sin indicador de desgaste 1 pastilla externa con indicador de desgaste derecho 1 pastilla externa con indicador de desgaste izquierdo
PD/1381		8663 D1463	D1463	Ford	2 inner pads without wear indicator 1 outer pad with wear indicator on right side 1 outer pad with wear indicator on left side	2 pastillas internas sin indicador de desgaste 1 pastilla externa con indicador de desgaste derecho 1 pastilla externa con indicador de desgaste izquierdo
PD/1382		7986 D1464	D1464	Ford	2 inner pads without wear indicator 1 outer pad with wear indicator on right side 1 outer pad with wear indicator on left side	2 pastillas internas sin indicador de desgaste 1 pastilla externa con indicador de desgaste derecho 1 pastilla externa con indicador de desgaste izquierdo
PD/1383		8664 D1465	D1465	Ford	2 inner pads with spring 1 outer pad with spring and indicator on right side 1 outer pad with spring and indicator on left side	2 pastillas internas con resorte 1 pastilla externa con resorte y indicador de desgaste derecho 1 pastilla externa con resorte y indicador de desgaste izquierdo

FRAS-LE	WVA	FMSI	CODE FMSI		Set composition	Composición del Juego
PD/1384		8671 D1471	D1471	Daihatsu, Suzuki, Toyota	4 equal pads	4 pastillas iguales
PD/1385	23340 / 23341 / 23342	8674 D1475	D1475	Toyota	2 inner pads without wear indicator 1 outer pad with wear indicator on right side 1 outer pad with wear indicator on left side	2 pastillas internas sin indicador de desgaste 1 pastilla externa con indicador de desgaste derecho 1 pastilla externa con indicador de desgaste izquierdo
PD/1386	23973 / 24403	8691 D1491	D1491	Renault	2 inner pads without wear indicator 1 outer pad with wear indicator on right side 1 outer pad with wear indicator on left side	2 pastillas internas sin indicador de desgaste 1 pastilla externa con indicador de desgaste derecho 1 pastilla externa con indicador de desgaste izquierdo
PD/1387	23099	8699 D1500	D1500	Nissan, Renault	4 equal pads	4 pastillas iguales
PD/1388		7656 D1506	D1506	Honda	2 inner pads without wear indicator 1 outer pad with wear indicator on right side 1 outer pad with wear indicator on left side	2 pastillas internas sin indicador de desgaste 1 pastilla externa con indicador de desgaste derecho 1 pastilla externa con indicador de desgaste izquierdo
PD/1389		8715 D1508	D1508	Ford	4 equal pads	4 pastillas iguales
PD/1390		8403 D1509	D1509	Infiniti, Nissan, Suzuki	2 inner pads without wear indicator 1 outer pad with wear indicator on right side 1 outer pad with wear indicator on left side	2 pastillas internas sin indicador de desgaste 1 pastilla externa con indicador de desgaste derecho 1 pastilla externa con indicador de desgaste izquierdo
PD/1391		8720 D1511	D1511	FAW	4 pads with spring	4 pastillas con resorte
PD/1392		8721 D1512	D1512	FAW	2 inner pads with spring and indicator 2 outer pads with spring	2 pastillas internas con resorte y indicador de desgaste 2 pastillas externas con resorte
PD/1393	24342 / 25351	7994 D1521	D1521	Honda	2 inner pads without wear indicator 1 outer pad with wear indicator on right side 1 outer pad with wear indicator on left side	2 pastillas internas sin indicador de desgaste 1 pastilla externa con indicador de desgaste derecho 1 pastilla externa con indicador de desgaste izquierdo
PD/1394	25246	8731 D1523	D1523	Toyota	4 equal pads	4 pastillas iguales
PD/1395	23284	8742 D1533	D1533	GM	4 equal pads	4 pastillas iguales
PD/1396	24349	8746 D1537	D1537	Fiat	4 equal pads	4 pastillas iguales
PD/1397-B	24466	8748 D1540	D1540	Citroen , Fiat, Peugeot	3 pads without connector 1 pad with connector	3 pastillas sin conector 1 pastilla con conector
PD/1398	23215 / 24325	8750 D1542	D1542	Renault	2 inner pads with spring 2 outer pads without spring	2 pastillas internas con resorte 2 pastillas externas sin resorte
PD/1399	24739 / 24740	8753 D1545	D1545	Mercedes-Benz	2 inner pads with spring 2 outer pads without spring	2 pastillas internas con resorte 2 pastilla externas sin resorte
PD/1400		8762 D1552	D1552	Nissan	2 inner pads without wear indicator 1 outer pad with wear indicator on right side 1 outer pad with wear indicator on left side	2 pastillas internas sin indicador de desgaste 1 pastilla externa con indicador de desgaste derecho 1 pastilla externa con indicador de desgaste izquierdo
PD/1401	25478 / 25479	8754 D1554	D1554	MINI	2 inner pads 2 outer pads	2 pastillas internas 2 pastillas externas
PD/1402		7987 D1562	D1562	Ford	2 inner pads with spring con indicador de desgaste 2 outer pads with spring	2 pastillas internas con resorte y con indicador de desgaste 2 pastilla externas con resorte
PD/1403	25410 / 25411 25412	8778 D1569	D1569	Fiat	2 inner pads without wear indicator 1 outer pad with wear indicator on right side 1 outer pad with wear indicator on left side	2 pastillas internas sin indicador de desgaste 1 pastilla externa con indicador de desgaste derecho 1 pastilla externa con indicador de desgaste izquierdo
PD/1404		8791 D1578	D1578	Honda	2 inner pads without wear indicator 1 outer pad with wear indicator on right side 1 outer pad with wear indicator on left side	2 pastillas internas sin indicador de desgaste 1 pastilla externa con indicador de desgaste derecho 1 pastilla externa con indicador de desgaste izquierdo
PD/1405-A	29229 / 29230	8793 D1581	D1581	Nissan, Renault	2 inner pads without wear indicator 1 outer pad with wear indicator on right side 1 outer pad with wear indicator on left side	2 pastillas internas sin indicador de desgaste 1 pastilla externa con indicador de desgaste derecho 1 pastilla externa con indicador de desgaste izquierdo
PD/1406	25297 / 25298 / 25299	8208 D1584	D1584	Honda	2 inner pads without wear indicator 1 outer pad with wear indicator on right side 1 outer pad with wear indicator on left side	2 pastillas internas sin indicador de desgaste 1 pastilla externa con indicador de desgaste derecho 1 pastilla externa con indicador de desgaste izquierdo
PD/1407	25434	8397 D1585	D1585	Honda	4 equal pads	4 pastillas iguales
PD/1408	25378 / 25379	8800 D1589	D1589	Chrysler, Fiat, Volkswagen	2 pads with wear indicator on right side 2 pads with wear indicator on left side	2 pastillas con indicador de desgaste derecho 2 pastillas con indicador de desgaste izquierdo
PD/1409	25348 / 25349 / 25350	8806 D1593	D1593	HYUNDAI	2 inner pads without wear indicator 2 outer pads with wear indicator	2 pastillas internas sin indicador de desgaste 2 pastillas externas con indicador de desgaste
PD/1410	25376 / 25377	8811 D1596	D1596	Chrysler, Fiat, Volkswagen	2 pads with wear indicator on right side 2 pads with wear indicator on left side	2 pastillas con indicador de desgaste derecho 2 pastillas con indicador de desgaste izquierdo
PD/1411		8924 D1700	D1700	Foton, Isuzu	4 equal pads	4 pastillas iguales
PD/1412		8816 D1602	D1602	Ford	4 equal pads	4 pastillas iguales
PD/1413	25466 / 25467 / 25468	8392 D1608	D1608	Honda	2 inner pads without wear indicator 1 outer pad with wear indicator on right side 1 outer pad with wear indicator on left side	2 pastillas internas sin indicador de desgaste 1 pastilla externa con indicador de desgaste derecho 1 pastilla externa con indicador de desgaste izquierdo
PD/1414	25449 / 25450	8824 D1611	D1611	Ford	2 pads with wear indicator on right side 2 pads with wear indicator on left side	2 pastillas con indicador de desgaste derecho 2 pastillas con indicador de desgaste izquierdo
PD/1415	25458 / 25459 / 24460	8825 D1612	D1612	Ford	2 inner pads without wear indicator 1 outer pad with wear indicator on right side 1 outer pad with wear indicator on left side	2 pastillas internas sin indicador de desgaste 1 pastilla externa con indicador de desgaste derecho 1 pastilla externa con indicador de desgaste izquierdo
PD/1416	23601	8742 D1617	D1617	FIAT	4 equal pads	4 pastillas iguales
PD/1417	21436	8831 D1619	D1619	Fiat	4 equal pads	4 pastillas iguales
PD/1418-A	29160	8834 D1622	D1622	Nissan	2 pads with connector 2 pads without connector	2 pastillas com conector 2 pastillas sin conector
PD/1419	25564	8836 D1623	D1623	Mazda	2 inner pads without wear indicator 1 outer pad with wear indicator on right side 1 outer pad with wear indicator on left side	2 pastillas internas sin indicador de desgaste 1 pastilla externa con indicador de desgaste derecho 1 pastilla externa con indicador de desgaste izquierdo
PD/1420	25540 / 25541	8837 D1624	D1624	Mazda	4 pads with spring with wear indicator	4 pastillas con indicador de desgaste
PD/1421	25552 / 25553 / 25554	8840 D1625	D1625	Acura	2 inner pads without wear indicator 1 outer pad with wear indicator on right side 1 outer pad with wear indicator on left side	2 pastillas internas sin indicador de desgaste 1 pastilla externa con indicador de desgaste derecho 1 pastilla externa con indicador de desgaste izquierdo

FRAS-LE	WVA	FMSI	CODE FMSI		Set composition	Composición del Juego
PD/1422	24538 / 24914	8844 D1627	D1627	Peugeot / Renault	2 inner pads with spring 2 outer pads without spring	2 pastillas internas con resorte 2 pastilla externas sin resorte
PD/1423	24708	8845 D1628	D1628	Toyota	4 equal pads	4 pastillas iguales
PD/1424	25562	7974 D1631	D1631	Ford	4 equal pads	4 pastillas iguales
PD1425	23619	8865 D1638		Ford	4 equal pads	4 pastillas iguales
PD/1426		8867 D1640	D1640	CHRYSLER	4 equal pads	4 pastillas iguales
PD/1427	25555 / 25556	8873 D1645	D1645	Ford	2 inner pads with spring 2 outer pads without spring	2 pastillas internas con resorte 2 pastilla externas sin resorte
PD/1428		8875 D1647	D1647	Dodge	2 pads with wear indicator on right side 2 pads with wear indicator on left side	2 pastillas con indicador de desgaste derecho 2 pastillas con indicador de desgaste izquierdo
PD/1429	25588 / 25589	8877 D1649	D1649	Infiniti	2 pads with wear indicator on right side 2 pads with wear indicator on left side	2 pastillas con indicador de desgaste derecho 2 pastillas con indicador de desgaste izquierdo
PD/1430	25581 / 25582	8878 D1650	D1650	Nissan	2 pads with wear indicator on right side 2 pads with wear indicator on left side	2 pastillas con indicador de desgaste derecho 2 pastillas con indicador de desgaste izquierdo
PD/1431	24162	8989 D1651	D1651	Renault	4 equal pads	4 pastillas iguales
PD/1432	25591 / 25592 / 25593	8882 D1653	D1653	Ford	2 inner pads with spring 2 outer pads without spring	2 pastillas internas con resorte 2 pastilla externas sin resorte
PD/1433	25149 / 25150 / 25151	8906 D1677	D1677	GM	2 inner pads without wear indicator 1 outer pad with wear indicator on right side 1 outer pad with wear indicator on left side	2 pastillas internas sin indicador de desgaste 1 pastilla externa con indicador de desgaste derecho 1 pastilla externa con indicador de desgaste izquierdo
PD/1434	25632 / 25633 / 25634	8905 D1676	D1676	Ford	2 inner pads without wear indicator 1 outer pad with wear indicator on right side 1 outer pad with wear indicator on left side	2 pastillas internas sin indicador de desgaste 1 pastilla externa con indicador de desgaste derecho 1 pastilla externa con indicador de desgaste izquierdo
PD/1438				Toyota	2 inner pads without wear indicator 1 outer pad with wear indicator on right side 1 outer pad with wear indicator on left side	2 pastillas internas sin indicador de desgaste 1 pastilla externa con indicador de desgaste derecho 1 pastilla externa con indicador de desgaste izquierdo
PD/1439-B	24147/ 25167			Renault	3 inner pads without connector 1 outer pad with connector	3 pastillas internas sin conector 1 pastilla externa con conector
PD/1440-B	25112 / 25113			Renault	3 inner pads without connector 1 outer pad with connector	3 pastillas internas sin conector 1 pastilla externa con conector
PD/1441		8810-D1595	D1595	HYUNDAI	1 inner pad with wear indicator on right side 1 inner pad with wear indicator on left side 2 outer pads	1 pastilla interna con indicador de desgaste derecho 1 pastilla interna con indicador de desgaste izquierdo 2 pastillas externas
PD/1442	23920			Volvo, Mitsubishi	2 inner pads 2 outer pads	2 pastillas internas 2 pastillas externas
PD/1443-A	20261 / 20267			Citroen	2 pads with connector 2 pads without connector	2 pastillas com conector 2 pastillas sin conector
PD/1444	23245 / 23247 / 23248			Renault	2 inner pads with spring 2 outer pads without spring	2 pastillas internas con resorte 2 pastillas externas sin resorte
PD/1445	24922			Citroen, Peugeot	4 equal pads	4 pastillas iguales
PD/1446	24820			Renault	4 equal pads	4 pastillas iguales
PD/1447	23720 / 24213 / 24214			Honda	2 inner pads with spring 2 outer pads without spring	2 pastillas internas con resorte 2 pastilla externas sin resorte
PD/1448	23732 / 23737			BMW	2 inner pads with spring 2 outer pads without spring	2 pastillas internas con resorte 2 pastillas externas sin resorte
PD/1449-A	23885 / 23896 / 23897	7928 D1024 7928 D1117	D1024 D1117	Audi	2 inner pads with spring and connector 2 outer pads without spring and connector	2 pastillas internas con resorte y conector 2 pastilla externas sin resorte y conector
PD/1450	23961	8421 D1130	D1130	Porsche	4 equal pads	4 pastillas iguales
PD/1451	23263 / 23624	8345 D1226	D1226	BMW, Mini	2 inner pads 2 outer pads	2 pastillas internas 2 pastillas externas
PD/1452	24170 / 24171	8411 D1294	D1294	BMW	2 inner pads 2 outer pads	2 pastillas internas 2 pastillas externas
PD/1453	24496	8422 D1307	D1307	Land Rover, Volvo	4 equal pads	4 pastillas iguales
PD/1454	24409 / 24743	8434 D1322	D1322	Audi	2 inner pads with spring 2 outer pads without spring	2 pastillas internas con resorte 2 pastillas externas sin resorte
PD/1455	24310 / 24456	8453 D1342	D1342	Mercedes-Benz	2 inner pads with spring 2 outer pads without spring	2 pastillas internas con resorte 2 pastillas externas sin resorte
PD/1456	24483	8213 D1348	D1348	Volkswagen	4 equal pads	4 pastillas iguales
PD/1457-B	24332 / 24333 / 24334	8486 D1375	D1357	Audi, Volkswagen	1 inner pad with spring and connector 1 inner pad with spring 2 outer pads	1 pastilla interna con resorte y connector 1 pastilla interna con resorte 2 pastillas externas
PD/1458	24172 / 24173	8490 D1381	D1381	BMW	2 inner pads with spring 2 outer pads without spring	2 pastillas internas con resorte 2 pastillas externas sin resorte
PD/1459	24399 / 24875	8525 D1412	D1412	Peugeot, Volvo	2 inner pads with spring 2 outer pads without spring	2 pastillas internas con resorte 2 pastillas externas sin resorte
PD/1460	24659	8543 D1426	D1426	Land Rover	4 equal pads	4 pastillas iguales
PD/1461	25085	8544 D1427	D1427	Land Rover	4 equal pads	4 pastillas iguales
PD/1462	25187 / 25188 / 25189	8615 D1447	D1447	Hyundai, Kia Motors	2 inner pads 2 outer pads	2 pastillas internas 2 pastillas externas
PD/1463	24685	8642 D1452	D1452	Porsche, Volkswagen	4 equal pads	4 pastillas iguales
PD/1464	24452 / 24721	8643 D1453	D1453	Porsche, Volkswagen	4 equal pads	4 pastillas iguales
PD/1465	24563	8656 D1456	D1456	Audi, Volkswagen	4 equal pads	4 pastillas iguales
PD/1466	24561 / 24562	8672 D1473	D1473	BMW	2 inner pads 2 outer pads	2 pastillas internas 2 pastillas externas

FRAS-LE	WVA	FMSI	CODE FMSI		Set composition	Composición del Juego
PD/1468		8902 D1673	D1673	HONDA/BMW	2 inner pads with wear indicator 2 outer pads without wear indicator	2 pastillas internas con indicador de desgaste 2 pastillas externas sin indicador de desgaste
PD/1469		8903 D1674	D1674		2 pads with connector 2 pads without connector	2 pastillas com conector 2 pastillas sin conector
PD/1470	24660	8922 D1696	D1696	Citroen, Peugeot	4 equal pads	4 pastillas iguales
PD/1471	21471	7517 D639	D639	BMW, Ferrari	4 equal pads	4 pastillas iguales
PD/1472	21484 / 21485	7561 D682	D682	Audi, BMW, Chrysler, Mercedes-Benz	2 inner pads with spring 2 outer pads without spring	2 pastillas internas con resorte 2 pastillas externas sin resorte
PD/1473	23309 / 23310 / 24495	7820 D919	D919	BMW	2 inner pads 2 outer pads	2 pastillas internas 2 pastillas externas
PD/1474		7887 D985	D985	Mercedes-Benz	4 equal pads	4 pastillas iguales
PD/1475		8517 D987		Mercedes-Benz	4 equal pads	4 pastillas iguales
PD/1476	24077			Mercedes-Benz	4 equal pads	4 pastillas iguales
PD/1477-E	24134 / 24135			Peugeot	2 inner pads with connector 2 outer pads with connector	2 pastillas internas con conector 2 pastillas externas con conector
PD/1478					2 inner pads 2 outer pads	2 pastillas internas 2 pastillas externas
PD/1479	25321	8888 D1661	D1661	GM	4 equal pads	4 pastillas iguales
PD/1480	25698 / 25699 / 25700			Toyota	2 inner pads without wear indicator 1 outer pad with wear indicator on right side 1 outer pad with wear indicator on left side	2 pastillas internas sin indicador de desgaste 1 pastilla externa con indicador de desgaste derecho 1 pastilla externa con indicador de desgaste izquierdo
PD/1481	25365 / 25366 / 25367			Kia Motors	2 inner pads without wear indicator 1 outer pad with wear indicator on right side 1 outer pad with wear indicator on left side	2 pastillas internas sin indicador de desgaste 1 pastilla externa con indicador de desgaste derecho 1 pastilla externa con indicador de desgaste izquierdo
PD/1482				Fiat	2 inner pads with spring 2 outer pads without spring	2 pastillas internas con resorte 2 pastillas externas sin resorte
PD/1482-B				Fiat	1 inner pad with spring 1 inner pad with spring and connector 2 outer pads with spring	1 pastilla interna con resorte 1 pastilla interna con resorte y conector 2 pastillas externas con resorte
PD/1483	25702 / 25703			Renault	2 inner pads with spring 2 outer pads without spring	2 pastillas internas con resorte 2 pastillas externas sin resorte
PD/1487	25153 / 25154 / 25155	8401 D1284	D1202	Hyindai	2 inner pads without wear indicator 1 outer pad with wear indicator on right side 1 outer pad with wear indicator on left side	2 pastillas internas sin indicador de desgaste 1 pastilla externa con indicador de desgaste derecho 1 pastilla externa con indicador de desgaste izquierdo
PD/1488	25610 / 25611 / 25612	8950 D1726		Toyota	2 inner pads without wear indicator 1 outer pad with wear indicator on right side 1 outer pad with wear indicator on left side	2 pastillas internas sin indicador de desgaste 1 pastilla externa con indicador de desgaste derecho 1 pastilla externa con indicador de desgaste izquierdo
PD/1489	25599 / 25600 / 25601	8951 D1727	D1727	Toyota	2 inner pads without wear indicator 1 outer pad with wear indicator on right side 1 outer pad with wear indicator on left side	2 pastillas internas sin indicador de desgaste 1 pastilla externa con indicador de desgaste derecho 1 pastilla externa con indicador de desgaste izquierdo
PD/1490-B	25683 / 25684	8989 D1760		Volkswagen	3 pads without connector 1 pad with connector	3 pastillas sin conector 1 pastilla con iconector
PD/1491	25008 / 25010	8990 D1761	D1761	Volkswagen	2 pads without springs 2 pads with springs	2 pastillas sin resorte 2 pastillas con resorte
PD/1492		8502 D1394	D1394	Honda	2 inner pads without wear indicator 1 outer pad with wear indicator on right side 1 outer pad with wear indicator on left side	2 pastillas internas sin indicador de desgaste 1 pastilla externa con indicador de desgaste derecho 1 pastilla externa con indicador de desgaste izquierdo
PD/1493-B	24727 24728 24729			FIAT	2 PIECES WITHOUT SPRING AND CONNECTOR 1 PIECE WITH SPRING AND WITHOUT CONNECTOR 1 PIECE WITH SPRING AND CONNECTOR	2 pastillas externas sin resorte e com indicador de desgaste 1 pastilla interna con resorte e sin indicador de desgaste 1 pastilla interna con resorte e com indicator de desgaste
PD/1494	25792 / 25793 / 25794	8883 D1654	D1654	HONDA	3 inner pads without wear indicator 1 outer pad with wear indicator on right side 1 outer pad with wear indicator on left side	3 pastillas internas sin indicador de desgaste 1 pastilla externa con indicador de desgaste derecho 1 pastilla externa con indicador de desgaste izquierdo
PD/1495	25947 / 25948 / 25949			HONDA	2 inner pads without wear indicator 1 outer pad with wear indicator on right side 1 outer pad with wear indicator on left side	2 pastillas internas sin indicador de desgaste 1 pastilla externa con indicador de desgaste derecho 1 pastilla externa con indicador de desgaste izquierdo
PD/1496	25733 / 22169 / 22170	9044 D1809	D1809	JEEP	4 inner pads without wear indicator 1 outer pad with wear indicator on right side 1 outer pad with wear indicator on left side	4 pastillas internas sin indicador de desgaste 1 pastilla externa con indicador de desgaste derecho 1 pastilla externa con indicador de desgaste izquierdo
PD/1497	24915 / 24916 / 24917	8527 D1413	D1413	Kia Motors	2 inner pads without wear indicator 1 outer pad with wear indicator on right side 1 outer pad with wear indicator on left side	2 pastillas internas sin indicador de desgaste 1 pastilla externa con indicador de desgaste derecho 1 pastilla externa con indicador de desgaste izquierdo
PD/1498	25434	8397 D1281	D1281	GM	4 equal pads	4 pastillas iguales
PD/1499				Volkswagen	2 inner pads with spring 2 outer pads without spring	2 pastillas internas con resorte 2 pastillas externas sin resorte
PD/1514	25034	8667 D1470	D1470	FORD	1 inner pad with wear indicator on right side 1 inner pad with wear indicator on left side 2 outer pads	1 pastilla interna con indicador de desgaste derecho 1 pastilla interna con indicador de desgaste izquierdo 2 pastillas externas
PD/1514	25034	8667 D1470	D1470	FORD / GM	1 inner pad with wear indicator on right side 1 inner pad with wear indicator on left side 2 outer pads	1 pastilla interna con indicador de desgaste derecho 1 pastilla interna con indicador de desgaste izquierdo 2 pastillas externas

WIDTH ANCHO	HEIGHT ALTURA	THICKNESS ESPESOR	FRAS-LE	DRAWINGS DIBUJOS
54.00	65.00	15.00	**PD/490**	Pag.: 390
55.80	53.00	15.00	**PD/5**	Pag.: 390
61.70	57.60	15.00	**PD/41**	Pag.: 390
61.80	51.00	15.20	**PD/36**	Pag.: 390
61.80	56.80	15.00	**PD/6**	Pag.: 390
61.80	56.80	15.00	**PD/16**	Pag.: 390
61.80	56.80	18.50	**PD/17**	Pag.: 390
61.80	61.30	15.00	**PD/38**	Pag.: 390
63.40	55.60	14.30	**PD/316**	Pag.: 390
63.50	64.40	14.80	**PD/1046**	Pag.: 390
63.50	72.40	14.20	**PD/1050**	Pag.: 390
63.70	57.40	16.00	**PD/657-A**	Pag.: 390
63.80	57.40	17.00	**PD/425-A**	Pag.: 390
63.80	75.60	14.30	**PD/1013**	Pag.: 390
63.50/77.70	74.60/75.40	17.90/18.30	**PD/1055-A**	Pag.: 390
68.30	55.20	16.00	**PD/468-A**	Pag.: 391
69.10	72.00	14.90	**PD/1010**	Pag.: 391
73.00	70.50	15.20	**PD/651**	Pag.: 391
74.80	64.70	14.60	**PD/1056**	Pag.: 391
76.70	60.20	13.70	**PD/1060**	Pag.: 391
76.80	61.30	18.50	**PD/43**	Pag.: 391
76.80	68.00	15.00	**PD/11**	Pag.: 391
76.80	70.00	15.00	**PD/1**	Pag.: 391
76.80	70.00	18.50	**PD/13**	Pag.: 391
77.00	65.50	17.30	**PD/307**	Pag.: 391
78.40	64.30	15.00	**PD/7**	Pag.: 391
78.40	64.50	16.70	**PD/311-A**	Pag.: 391
78.60	54.00	13.40	**PD/629**	Pag.: 391
78.80	59.00	14.90	**PD/616**	Pag.: 391
78.80	64.00	13.50	**PD/330**	Pag.: 392
80.70	65.60	15.40	**PD/313**	Pag.: 392
82.00	57.00	15.10	**PD/596**	Pag.: 392
83.90	60.50	16.00	**PD/31**	Pag.: 392
84.90	51.00	13.40	**PD/1372**	Pag.: 392
85.20	46.40	13.70	**PD/666**	Pag.: 392
85.20	46.40	13.70	**PD/684**	Pag.: 392
85.50	38.70	13.00	**PD/401**	Pag.: 392
87.00	42.50	14.50	**PD/480**	Pag.: 392
87.00	44.50	14.40	**PD/430**	Pag.: 392
87.10	47.30	15.90	**PD/1054**	Pag.: 392
87.20	52.90	15.20	**PD/362**	Pag.: 392
87.20	52.90	17.00	**PD/59**	Pag.: 392
87.20	66.80	16.40	**PD/49**	Pag.: 392
87.20	66.80	16.40	**PD/334**	Pag.: 393
87.40	44.50	14.40	**PD/439**	Pag.: 393
88.30	68.80	14.50	**PD/416**	Pag.: 393
88.50	72.20	15.00	**PD/464-B**	Pag.: 393
88.70	35.00	12.60	**PD/457**	Pag.: 393
88.80	47.40	14.60	**PD/554**	Pag.: 393
88.80	47.40	14.60	**PD/645**	Pag.: 393
88.80	47.40	14.60	**PD/690**	Pag.: 393

WIDTH ANCHO	HEIGHT ALTURA	THICKNESS ESPESOR	FRAS-LE	DRAWINGS DIBUJOS
88.90	36.60	13.00	**PD/398**	Pag.: 393
88.90	47.80	14.50	**PD/444**	Pag.: 393
89.50	70.00	19.00	**PD/361-A**	Pag.: 393
89.60	50.00	16.50	**PD/451**	Pag.: 393
89.70	57.50	16.00	**PD/18**	Pag.: 394
89.80	62.90	17.70	**PD/363-A**	Pag.: 394
90.10	40.60	15.00	**PD/699**	Pag.: 394
90.10	40.60	17.10	**PD/698**	Pag.: 394
90.10	70.10	14.90	**PD/1355**	Pag.: 394
91.50	64.10	15.00	**PD/376**	Pag.: 394
91.50	80.10	18.00	**PD/487**	Pag.: 394
91.70	71.10	14.80	**PD/132**	Pag.: 394
91.10/111.50	44.90/45.10	15.30	**PD/632**	Pag.: 394
93.00	37.70	15.80	**PD/739**	Pag.: 394
93.10	41.00	15.00	**PD/1093**	Pag.: 394
93.20	41.50	14.90	**PD/1334**	Pag.: 394
93.50	46.00	14.70	**PD/1088**	Pag.: 395
94.70	42.60	16.70	**PD/696**	Pag.: 395
94.70	51.20	16.50	**PD/1045**	Pag.: 395
94.80	46.80	16.10	**PD/1335**	Pag.: 395
94.90	41.60	15.40	**PD/50**	Pag.: 395
95.00	43.00	16.30	**PD/518**	Pag.: 395
95.00	49.00	18.40	**PD/326-A**	Pag.: 395
95.00	57.50	17.00	**PD/407**	Pag.: 395
95.20	43.30	15.00	**PD/1332**	Pag.: 395
95.30	38.90/48.50	16.20	**PD/1303**	Pag.: 395
95.30	45.00/51.40	16.00	**PD/1401**	Pag.: 395
95.30	45.00/51.40	16.50	**PD/1451**	Pag.: 395
95.50	41.80	14.00	**PD/1333**	Pag.: 395
95.50	42.50	14.70	**PD/600**	Pag.: 396
95.50	61.80	16.80	**PD/400-A**	Pag.: 396
95.50	81.10	16.30	**PD/1016**	Pag.: 396
95.60	43.80	13.70	**PD/1395**	Pag.: 396
95.60	43.90	13.50	**PD/1331**	Pag.: 396
95.70	37.90	16.00	**PD/512**	Pag.: 396
95.70	43.90	13.80	**PD/1403**	Pag.: 396
95.80	43.90	13.30	**PD/1416**	Pag.: 396
96.80	49.40	15.40	**PD/753**	Pag.: 396
98.20	68.00	15.00	**PD/8**	Pag.: 396
98.20	68.00	16.40	**PD/9**	Pag.: 396
98.20	68.70	15.00	**PD/306**	Pag.: 396
98.50	42.70	15.60	**PD/1320**	Pag.: 396
99.00	35.40	16.00	**PD/1037**	Pag.: 396
99.00	41.00	15.00	**PD/725**	Pag.: 397
99.50	44.00	15.10	**PD/730**	Pag.: 397
99.50	64.50	16.30	**PD/304**	Pag.: 397
99.80	41.10	14.90	**PD/1368**	Pag.: 397
99.90	41.50	14.80/15.40	**PD/1304**	Pag.: 397
99.90	41.70	14.80	**PD/1356**	Pag.: 397
99.90	59.00	15.20	**PD/424**	Pag.: 397
100.00	40.60	15.70	**PD/1468**	Pag.:397

Pads Sizes - *Tamaño de Pastillas*

WIDTH ANCHO	HEIGHT ALTURA	THICKNESS ESPESOR	FRAS-LE	DRAWINGS DIBUJOS
100.00	59.00	15.50	**PD/431**	Pag.: 397
100.00	63.50	18.00	**PD/305**	Pag.: 397
100.00	63.50	18.00	**PD/305-A**	Pag.: 397
100.00	64.90	18.00	**PD/338**	Pag.: 397
100.00	64.90	18.00	**PD/338-A**	Pag.: 397
100.10	63.50	17.50	**PD/521-E**	Pag.: 397
101.30	57.50	17.10	**PD/806**	Pag.: 397
101.50	42.50	11.70	**PD/344**	Pag.: 397
101.50	59.90	11.30/18.00	**PD/317**	Pag.: 397
101.80	43.80	15.40	**PD/762**	Pag.: 398
101.90	47.00	16.60	**PD/1396**	Pag.: 398
101.90	50.30	17.60	**PD/1095-A**	Pag.: 398
101.90	50.40	16.40	**PD/768**	Pag.: 398
101.90	50.40	16.40	**PD/1021**	Pag.: 398
101.90	79.00	15.90	**PD/1022**	Pag.: 398
102.10	43.00	12.40	**PD/1041**	Pag.: 398
102.20	43.00	12.40	**PD/558**	Pag.: 398
102.30	48.40	15.60	**PD/1338**	Pag.: 398
102.40	46.70	14.00	**PD/455**	Pag.: 398
102.50	45.60	15.50	**PD/689**	Pag.: 398
102.70/108.00	46.60/46.70	14.00	**PD/1391**	Pag.: 398
102.90/108.00	42.30	15.00	**PD/1392**	Pag.: 398
103.50	43.20	14.80	**PD/378**	Pag.: 398
103.70	68.00	16.50	**PD/1445**	Pag.: 399
104.00	60.50	17.00	**PD/27-A**	Pag.: 399
104.00	66.50	17.00	**PD/335-A**	Pag.: 399
104.20	53.50	15.90	**PD/54**	Pag.: 399
104.20	58.30	15.70	**PD/22**	Pag.: 399
104.20	58.30	18.00	**PD/26**	Pag.: 399
104.20	58.30	18.00	**PD/26-A**	Pag.: 399
104.40	38.90	13.90	**PD/681**	Pag.: 399
104.60	43.60	14.40	**PD/1420**	Pag.: 399
104.70	42.50	15.60	**PD/604**	Pag.: 399
104.70	42.50	15.60	**PD/1380**	Pag.: 399
104.80	41.60	15.20	**PD/478**	Pag.: 399
104.80	42.80	15.70	**PD/477**	Pag.: 399
104.90	47.20	15.80	**PD/535**	Pag.: 400
104.90	72.30	18.50	**PD/458-B**	Pag.: 400
105.00	54.60	15.00	**PD/327**	Pag.: 400
105.00	55.00	11.00	**PD/465**	Pag.: 400
105.00	65.20	17.40	**PD/312-A**	Pag.: 400
105.20	54.00	17.70	**PD/322**	Pag.: 400
105.20	54.00	17.70	**PD/322-A**	Pag.: 400
105.20	54.00	17.70	**PD/522-E**	Pag.: 400
105.20	56.30	16.00	**PD/1456**	Pag.: 400
105.30	55.90	16.00	**PD/1030**	Pag.: 400
105.40	38.00	13.70	**PD/1025**	Pag.: 400
105.40	43.00	15.90	**PD/741**	Pag.: 401
105.40	46.80	15.80	**PD/692**	Pag.: 401
105.40	46.80	16.30	**PD/691**	Pag.: 401
105.50	38.00	14.20	**PD/585**	Pag.: 401

WIDTH ANCHO	HEIGHT ALTURA	THICKNESS ESPESOR	FRAS-LE	DRAWINGS DIBUJOS
105.50	53.70	18.00	**PD/303-A**	Pag.: 401
105.90	35.20	15.40	**PD/723**	Pag.: 401
106.00	38.30	17.50	**PD/703**	Pag.: 401
106.10	45.50	15.20	**PD/1446**	Pag.: 401
106.10	48.80	15.70	**PD/1453**	Pag.: 401
106.10	56.00/63.10	17.00	**PD/1466**	Pag.: 401
106.30	50.60	15.00	**PD/1330**	Pag.: 401
107.40	44.60	15.00	**PD/379**	Pag.: 401
107.50	42.60	14.90	**PD/682**	Pag.: 401
107.60	41.10	15.00	**PD/683**	Pag.: 402
107.60	41.20	13.90	**PD/1048**	Pag.: 402
107.70	38.70	14.80	**PD/778**	Pag.: 402
107.90	39.50	13.10	**PD/1131**	Pag.: 402
108.00	41.20	13.80	**PD/677**	Pag.: 402
108.00	41.20	13.80	**PD/688**	Pag.: 402
108.00	41.20	13.80	**PD/709**	Pag.: 402
108.00	43.50	14.00	**PD/450**	Pag.: 402
108.30	45.50	14.80	**PD/1373**	Pag.: 402
108.40	41.60	13.80	**PD/619**	Pag.: 402
108.50	39.30	13.50	**PD/421**	Pag.: 402
108.50	40.30	15.60	**PD/544**	Pag.: 402
108.50	40.30	16.00	**PD/75**	Pag.: 402
108.50	47.80	16.50	**PD/393**	Pag.: 403
108.50	47.80	16.50	**PD/532**	Pag.: 403
108.50	47.80	16.50	**PD/660**	Pag.: 403
108.50	47.90	15.80	**PD/1005**	Pag.: 403
108.60	34.30	14.90	**PD/1039**	Pag.: 403
108.80	47.50	14.00	**PD/301**	Pag.: 403
108.80	47.50	14.00	**PD/301-A**	Pag.: 403
108.80	47.50	14.00	**PD/310**	Pag.: 403
108.80	47.50	14.00	**PD/320**	Pag.: 403
108.80	47.50	17.40	**PD/309**	Pag.: 403
108.80	49.30	15.00	**PD/10**	Pag.: 403
108.80	53.30	15.00	**PD/302**	Pag.: 403
109.00	39.00	12.50	**PD/319**	Pag.: 403
109.00	39.00	17.30	**PD/308**	Pag.: 403
109.00	42.90	14.00	**PD/798**	Pag.: 404
109.00	43.20	15.50	**PD/735**	Pag.: 404
109.30	53.50	16.90	**PD/1465**	Pag.: 404
109.40	44.10	14.00	**PD/447**	Pag.: 404
109.50	42.20	15.80	**PD/693**	Pag.: 404
109.50	50.00	19.10	**PD/501**	Pag.: 404
109.50	73.20	18.20	**PD/151-A**	Pag.: 404
109.50	74.80	20.30	**PD/489**	Pag.: 404
109.60	63.80	20.00	**PD/163**	Pag.: 404
109.70	65.20	15.00	**PD/1017**	Pag.: 404
109.70	73.00	18.20	**PD/359-A**	Pag.: 404
110.00	47.60	16.00	**PD/1481**	Pag.: 404
110.00	59.00	17.50	**PD/45**	Pag.: 404
110.20	55.00	14.50	**PD/432**	Pag.: 404
110.20	57.20	13.40	**PD/415**	Pag.: 404

WIDTH ANCHO	HEIGHT ALTURA	THICKNESS ESPESOR	FRAS-LE	DRAWINGS DIBUJOS
110.40	37.50	13.80	**PD/813**	Pag.: 405
110.40	41.50	15.00	**PD/441**	Pag.: 405
110.50	40.20	16.00	**PD/1076**	Pag.: 405
110.50	41.00	16.00	**PD/1071**	Pag.: 405
110.60	42.20	14.40	**PD/646**	Pag.: 405
110.60	47.70	14.30	**PD/1299**	Pag.: 405
110.70	38.80	15.90	**PD/1072**	Pag.: 405
110.70	45.50	16.90	**PD/1081**	Pag.: 405
110.70	45.70	15.00	**PD/715**	Pag.: 405
111.30	48.50	14.50	**PD/611**	Pag.: 405
112.20	46.40	16.50	**PD/496**	Pag.: 405
112.50	42.40	16.60	**PD/793**	Pag.: 405
112.80	47.20	16.70	**PD/1068**	Pag.: 405
112.80	47.50	16.80	**PD/1402**	Pag.: 405
112.80	47.90	15.40	**PD/726**	Pag.: 406
112.80	49.20	16.10	**PD/1383**	Pag.: 406
113.00	49.30	15.20	**PD/1073**	Pag.: 406
113.20	48.20	15.40	**PD/1407**	Pag.: 406
113.20	48.20	15.40	**PD/1498**	Pag.:406
113.50	58.00	17.50	**PD/437**	Pag.: 406
113.80	40.90	13.40	**PD/766**	Pag.: 406
113.80	55.00	14.40	**PD/470**	Pag.: 406
113.80	56.20	14.00	**PD/710**	Pag.: 406
113.90	56.20	15.30	**PD/1489**	Pag.: 406
114.00	50.10	15.00	**PD/452**	Pag.: 406
114.20	56.60	15.30	**PD/742**	Pag.: 406
114.40	49.50	16.90	**PD/76**	Pag.: 406
114.80	50.60	15.90	**PD/1036**	Pag.: 406
114.90	47.50	16.00	**PD/380**	Pag.: 406
115.00	45.00	15.00	**PD/440**	Pag.: 407
115.00	55.40	17.00	**PD/1417**	Pag.: 407
115.60	49.50	16.50	**PD/1496**	Pag.:407
115.80	51.40	16.60	**PD/516**	Pag.: 407
115.80	52.00	15.90	**PD/599**	Pag.: 407
115.80	53.60	15.00	**PD/402-A**	Pag.: 407
116.00	45.80	16.00	**PD/1495**	Pag.:407
116.00	60.20	15.90	**PD/1369**	Pag.: 407
116.10	50.30	15.40	**PD/1031**	Pag.: 407
116.10	52.60	16.80	**PD/765**	Pag.: 407
116.10	58.70	16.60	**PD/592**	Pag.: 407
116.10	58.70	16.60	**PD/592-B**	Pag.: 407
116.20	47.10	15.80	**PD/633**	Pag.: 407
116.20	54.60	15.30	**PD/607**	Pag.: 407
116.20	55.00	15.30	**PD/1002**	Pag.: 407
116.30	44.10	15.50	**PD/695**	Pag.: 407
116.30	45.00	17.30	**PD/1085**	Pag.: 408
116.40	51.60	16.40	**PD/789**	Pag.: 408
116.50	57.10	17.00	**PD/67**	Pag.: 408
116.50	57.10	17.00	**PD/67-A**	Pag.: 408
116.50	57.20	16.80	**PD/1339**	Pag.: 408
116.60	45.50	15.40	**PD/1082**	Pag.: 408

WIDTH ANCHO	HEIGHT ALTURA	THICKNESS ESPESOR	FRAS-LE	DRAWINGS DIBUJOS
116.60	47.00	16.70	**PD/1070**	Pag.: 408
116.60	50.50	16.90	**PD/1090**	Pag.: 408
116.60	51.80	16.60	**PD/1415**	Pag.: 408
116.60	52.50	16.20	**PD/1386**	Pag.: 408
116.60	56.10	15.50	**PD/636**	Pag.: 408
116.60	63.00	16.30	**PD/1461**	Pag.: 408
116.60	64.00	18.00	**PD/1476**	Pag.: 408
116.70	45.50	15.40	**PD/419**	Pag.: 408
116.80	42.60	16.20	**PD/1102**	Pag.: 409
116.80	48.30	14.40	**PD/1487**	Pag.: 409
116.80	48.30	14.70	**PD/1366**	Pag.: 409
116.80	50.00	16.90	**PD/1350**	Pag.: 409
116.80	52.70	16.90	**PD/300**	Pag.: 409
116.80	55.20	16.50	**PD/712**	Pag.: 409
117.00	59.50	17.00	**PD/707**	Pag.: 409
117.50	58.60	17.40	**PD/788**	Pag.: 409
117.80	71.80	16.00	**PD/1009**	Pag.: 409
118.00	61.00	15.40	**PD/71**	Pag.: 409
118.00	65.00	17.00	**PD/409**	Pag.: 409
118.20	47.20	15.00	**PD/668**	Pag.: 409
118.30	47.10	14.80	**PD/1341**	Pag.: 410
118.40	48.40	14.70	**PD/794**	Pag.: 410
118.60	59.90	17.00	**PD/815**	Pag.: 410
118.60	59.90	18.70	**PD/593**	Pag.: 410
118.70	69.50	16.00	**PD/413**	Pag.: 410
118.70	69.50	19.40	**PD/443**	Pag.: 410
118.90	69.50	16.30	**PD/466**	Pag.: 410
118.90	69.50	19.60	**PD/467**	Pag.: 410
119.00	69.50	16.00	**PD/329**	Pag.: 410
119.00	69.50	16.00	**PD/337**	Pag.: 410
119.00	69.50	19.40	**PD/336**	Pag.: 410
119.00	69.50	19.40	**PD/602**	Pag.: 410
119.30	68.00	17.00	**PD/527**	Pag.: 410
119.30	68.00	17.00	**PD/773**	Pag.: 410
119.30	68.00/73.40	15.00	**PD/115**	Pag.: 411
119.30	78.00	16.80	**PD/724**	Pag.: 411
119.60	43.00	15.30	**PD/1035**	Pag.: 411
119.60	47.40	15.00	**PD/603**	Pag.: 411
119.60	47.40	15.00	**PD/680**	Pag.: 411
119.60	83.00	15.80	**PD/1474**	Pag.: 411
119.80	73.60	17.00	**PD/1471**	Pag.: 411
119.90	54.00	15.00	**PD/426**	Pag.: 411
120.90	38.30	13.90	**PD/1065**	Pag.: 411
121.80	58.30/59.10	16.20	**PD/1448**	Pag.: 411
122.60	38.20	15.40	**PD/792**	Pag.: 411
122.70	49.40	17.50	**PD/621**	Pag.: 411
122.70	52.40	19.00	**PD/648**	Pag.: 411
122.70	54.40	17.5	**PD/1423**	Pag.: 411
122.80	53.90	17.30	**PD/1029-A**	Pag.: 412
122.90	48.00	17.00	**PD/321**	Pag.: 412
122.90	48.00	17.00	**PD/321-A**	Pag.: 412

WIDTH ANCHO	HEIGHT ALTURA	THICKNESS ESPESOR	FRAS-LE	DRAWINGS DIBUJOS
122.70/123.80	54.00	16.10/16.30	**PD/1051**	Pag.: 412
123.00	43.50	16.50	**PD/488**	Pag.: 412
123.00	47.90	15.50	**PD/74**	Pag.: 412
123.00	49.60	16.90	**PD/1441**	Pag.: 412
123.00	53.10	17.80	**PD/509-B**	Pag.: 412
123.00	53.10	17.80	**PD/509-A**	Pag.:412
123.00	53.3	15.00	**PD/1513**	Pag.:412
123.00	55.50	15.40	**PD/812**	Pag.: 412
123.00	56.40/61.30	15.50	**PD/1491**	Pag.: 412
123.10	51.80	15.30	**PD/787**	Pag.: 412
123.10	51.80	16.00	**PD/796**	Pag.: 412
123.10	60.40	17.30	**PD/628**	Pag.: 412
123.20	43.30	15.50	**PD/1059**	Pag.: 413
123.20	43.40/47.90	16.20	**PD/1337**	Pag.: 413
123.20	45.20	17.40	**PD/819**	Pag.: 413
123.20	51.50/51.90	15.40	**PD/1061**	Pag.: 413
123.20	59.50	16.80	**PD/748**	Pag.: 413
123.20	60.30	16.30	**PD/1038**	Pag.: 413
123.20	63.20	17.70	**PD/1062**	Pag.: 413
123.30	44.80	16.30	**PD/716**	Pag.: 413
123.80	56.60/63.30	16.60	**PD/1351**	Pag.: 413
123.60/152.40	66.20/72.90	13.90/15.80	**PD/517**	Pag.: 413
123.70/152.40	67.60/73.20	13.30/14.70	**PD/761**	Pag.: 414
124.00	46.00	17.50	**PD/1479**	Pag.: 414
124.00	54.30	14.60	**PD/1438**	Pag.: 414
124.00	65.50	17.50	**PD/389**	Pag.: 414
124.10	57.20	17.00	**PD/595**	Pag.: 414
124.10	74.50	17.50	**PD/678**	Pag.: 414
124.20	49.70	16.40	**PD/1077**	Pag.: 414
124.30	64.70	19.30	**PD/531**	Pag.: 414
124.60	70.60	14.30	**PD/1431**	Pag.: 414
124.70	51.10	14.10	**PD/810**	Pag.: 414
124.80	52.60	17.50	**PD/756**	Pag.: 414
124.40/147.30	59.20/85.20	15.70/17.00	**PD/548**	Pag.: 414
125.10	60.00	19.20	**PD/617**	Pag.: 415
125.60	50.90	15.60	**PD/1097**	Pag.: 415
125.70	61.90	18.90	**PD/118**	Pag.: 415
125.70	61.90	18.90	**PD/118-A**	Pag.: 415
125.80	59.00	14.80	**PD/399**	Pag.: 415
125.70/142.20	61.70/73.80	16.00	**PD/546**	Pag.: 415
125.70/147.00	59.20/84.90	16.60/20.00	**PD/551**	Pag.: 415
125.70/147.00	59.20/84.90	16.60/20.00	**PD/552**	Pag.: 415
125.70/147.00	59.30/72.40	15.70/16.60	**PD/547**	Pag.: 415
126.00	45.00	16.00	**PD/32**	Pag.: 415
126.00	63.00	14.50	**PD/482**	Pag.: 415
126.80	49.60	13.80	**PD/1384**	Pag.: 416
126.80	68.60	18.00	**PD/474**	Pag.: 416
126.00/147.80	59.30/76.70	15.80/16.70	**PD/502**	Pag.: 416
126.00/152.40	61.70/73.00	13.50/15.00	**PD/540**	Pag.: 416
126.30/147.90	57.20/68.10	12.80/15.60	**PD/499**	Pag.: 416
126.80/128.30	52.10/55.00	15.60	**PD/612**	Pag.: 416

WIDTH ANCHO	HEIGHT ALTURA	THICKNESS ESPESOR	FRAS-LE	DRAWINGS DIBUJOS
127.00	48.20	15.70	**PD/598**	Pag.: 416
127.20	51.00	16.50	**PD/357**	Pag.: 416
127.30	49.00	14.70	**PD/549**	Pag.: 416
127.50	49.00	14.80	**PD/382**	Pag.: 416
127.60	54.70	17.00	**PD/423**	Pag.: 416
127.70	51.70	16.00	**PD/469**	Pag.: 416
127.80	48.10	14.80	**PD/386**	Pag.: 416
127.90	50.40	16.40	**PD/687**	Pag.: 416
128.00	57.00	16.40	**PD/377**	Pag.: 417
128.60	59.60	17.60	**PD/1440-B**	Pag.: 417
129.00	51.50	15.70	**PD/791**	Pag.: 417
129.00	54.80	16.00	**PD/782**	Pag.: 417
129.00	56.20	19.20	**PD/514**	Pag.: 417
129.20	68.00	17.50	**PD/463-B**	Pag.: 417
129.20	68.50	18.00	**PD/394**	Pag.: 417
129.70	54.80	18.80	**PD/1379**	Pag.: 417
129.80	56.00	17.00	**PD/1279**	Pag.: 417
129.80	65.20	19.00	**PD/406**	Pag.: 417
129.80	65.20	19.00	**PD/406-B**	Pag.: 417
129.80	72.60	18.00	**PD/473**	Pag.: 417
129.80	72.70	15.00	**PD/1442**	Pag.: 417
129.90	43.10	19.00	**PD/325-A**	Pag.: 417
129.90	55.60	18.60	**PD/391**	Pag.: 418
129.90	55.60	18.60	**PD/391-A**	Pag.: 418
129.90	63.90	18.30	**PD/40**	Pag.: 418
130.00	49.20	16.60	**PD/428**	Pag.: 418
130.00	53.00	19.00	**PD/414-E**	Pag.: 418
130.00	55.20	16.60	**PD/1410**	Pag.: 418
130.00	56.00	19.00	**PD/411**	Pag.: 418
130.00	56.00	19.00	**PD/411-E**	Pag.: 418
130.00	56.30	19.00	**PD/405-E**	Pag.: 418
130.00	56.80	16.80	**PD/1462**	Pag.: 418
130.00	57.80	15.90	**PD/1092**	Pag.: 418
130.00	58.90	19.00	**PD/483-A**	Pag.: 418
130.00	58.90	19.00	**PD/484-A**	Pag.: 418
130.00	77.00	16.40	**PD/1053**	Pag.: 418
130.50	49.20	16.80	**PD/136**	Pag.: 418
130.80	45.00/51.00	16.20	**PD/1385**	Pag.: 419
130.80	47.40	17.00	**PD/1096**	Pag.: 419
131.00	47.30	18.00	**PD/412-B**	Pag.: 419
131.00	47.30	18.00	**PD/435**	Pag.: 419
131.00	73.00	17.00	**PD/454-E**	Pag.: 419
131.00	76.70	18.30	**PD/1477-E**	Pag.: 419
131.10	52.50	18.00	**PD/507**	Pag.: 419
131.10	62.50/70.60	18.60/18.80	**PD/1011**	Pag.: 419
131.30	57.50	17.80	**PD/35**	Pag.: 419
131.40	53.30/65.70	16.90	**PD/1302**	Pag.: 419
131.40	60.10	16.20	**PD/1277**	Pag.: 419
131.40	62.40	18.80	**PD/520**	Pag.: 420
131.50	54.50	15.00	**PD/404**	Pag.: 420
131.50	69.90	18.30	**PD/1344**	Pag.: 420

WIDTH ANCHO	HEIGHT ALTURA	THICKNESS ESPESOR	FRAS-LE	DRAWINGS DIBUJOS
131.60	45.50	16.40	**PD/1425**	Pag.: 420
131.60	51.50	15.40	**PD/610**	Pag.: 420
131.60	52.30/55.40	16.70	**PD/46**	Pag.: 420
131.60	56.60	16.00	**PD/1049**	Pag.: 420
131.60	60.00	16.90	**PD/635**	Pag.: 420
131.60	61.60	16.50	**PD/1469**	Pag.: 420
131.70	57.30	17.80	**PD/491**	Pag.: 420
131.70	58.70	17.30	**PD/745**	Pag.: 420
131.70	64.00/71.70	17.20	**PD/1288**	Pag.: 420
132.80	58.70	17.10	**PD/1409**	Pag.:420
132.80	60.00	16.80	**PD/1343**	Pag.: 421
133.00	48.80	16.80	**PD/1364**	Pag.: 421
133.00	60.00	16.90	**PD/1348**	Pag.: 421
133.10	48.50	16.90	**PD/818**	Pag.: 421
133.20	53.00	17.50	**PD/387**	Pag.: 421
133.30	52.10	15.00	**PD/333**	Pag.: 421
133.50	39.70	15.50	**PD/392**	Pag.: 421
133.60	39.30	15.70	**PD/701**	Pag.: 421
134.20	57.20/63.10	18.00	**PD/1480**	Pag.: 421
134.30	64.30	20.50	**PD/479**	Pag.: 421
134.50	77.10	17.00	**PD/528**	Pag.: 421
134.60	73.70/76.00	16.90	**PD/1074**	Pag.: 422
135.00	67.70	19.90	**PD/1475**	Pag.: 422
135.40	52.60	15.80	**PD/1052**	Pag.: 422
135.50	65.70	15.00	**PD/638**	Pag.: 422
136.30	57.30	16.30	**PD/493**	Pag.: 422
136.40	56.30	15.90	**PD/1492**	Pag.: 422
136.50	58.60	17.50	**PD/647**	Pag.: 422
136.50	58.60	17.50	**PD/816**	Pag.: 422
136.60	70.40	17.20	**PD/694**	Pag.: 422
136.80	57.20	18.40	**PD/346**	Pag.: 422
136.80	59.00	17.30	**PD/601**	Pag.: 422
136.80	67.50	16.50	**PD/1371**	Pag.: 422
137.00	52.20	16.80	**PD/343**	Pag.: 422
137.00	54.20	16.90	**PD/706**	Pag.: 423
137.00	57.50	19.00	**PD/511**	Pag.: 423
137.00	57.50	19.00	**PD/511-B**	Pag.: 423
137.00	63.10	19.00	**PD/663**	Pag.: 423
137.00	63.50	16.80	**PD/752**	Pag.: 423
137.10	51.10	19.00	**PD/505**	Pag.: 423
137.10	56.80	16.80	**PD/749**	Pag.: 423
137.10	58.00/61.60	18.20	**PD/669**	Pag.: 423
137.20	54.20	17.00	**PD/550**	Pag.: 423
137.20	54.70	16.70	**PD/453**	Pag.: 423
137.50	52.20	15.90	**PD/1404**	Pag.: 423
137.50	52.20	16.00	**PD/563**	Pag.: 423
137.50	54.00	15.40	**PD/728**	Pag.: 423
137.50	54.00	17.00	**PD/727**	Pag.: 423
137.50	54.40	16.90	**PD/700**	Pag.: 424
137.70	53.70	18.50	**PD/388**	Pag.: 424
137.80	47.30	17.40	**PD/738**	Pag.: 424

WIDTH ANCHO	HEIGHT ALTURA	THICKNESS ESPESOR	FRAS-LE	DRAWINGS DIBUJOS
137.80	58.20	16.30	**PD/445**	Pag.: 424
137.80	60.80	15.30	**PD/1296**	Pag.: 424
137.90	49.00/51.30	15.20	**PD/495**	Pag.: 424
137.90	49.00/51.30	19.70	**PD/328**	Pag.: 424
137.90	53.90	16.90	**PD/614**	Pag.: 424
138.00	52.00	16.80	**PD/717**	Pag.: 424
138.00	52.00	18.00	**PD/397**	Pag.: 424
138.00	59.10	16.90	**PD/613**	Pag.: 424
138.00	80.00	17.80	**PD/347**	Pag.: 424
138.50	48.30	13.90	**PD/1365**	Pag.: 424
138.80	59.60	18.60	**PD/790**	Pag.: 424
138.80	64.00	19.00	**PD/350**	Pag.: 425
138.80	66.50	18.00	**PD/472**	Pag.: 425
138.90	58.20	17.40	**PD/1080**	Pag.: 425
139.00	60.00	15.90	**PD/781**	Pag.: 425
139.10	56.40	17.00	**PD/721**	Pag.: 425
139.20	55.30	17.50	**PD/740**	Pag.: 425
139.20	58.50	15.40	**PD/538**	Pag.: 425
139.20	59.10	19.40	**PD/185**	Pag.: 425
139.30	72.00	18.80	**PD/351**	Pag.: 425
139.40	75.50	18.50	**PD/102**	Pag.: 425
139.40	75.50	19.50	**PD/109**	Pag.: 425
139.10/141.10	55.20/59.30	16.80	**PD/573**	Pag.: 425
139.30/139.50	67.70	15.90	**PD/1473**	Pag.: 425
139.40/141.40	52.90	19.70	**PD/751**	Pag.: 425
140.00	55.20	15.60	**PD/1394**	Pag.: 426
139.50	121.00	32.00	**PD/175**	Pag.: 426
139.50	121.00	34.00	**PD/176**	Pag.: 426
139.50	68.60	17.50	**PD/448-A**	Pag.: 426
139.70	51.30	14.20	**PD/754**	Pag.: 426
140.10	40.00/41.80	17.50	**PD/1483**	Pag.: 426
140.10	45.20	14.60	**PD/410**	Pag.: 426
140.10/141.30	44.50	17.50	**PD/55**	Pag.: 426
140.10/141.30	44.50	17.50	**PD/91**	Pag.: 426
140.10/141.30	48.30	16.20	**PD/82**	Pag.: 426
140.20	47.00	18.00	**PD/797**	Pag.: 427
140.20	49.30/61.00	15.90	**PD/1012-B**	Pag.: 427
140.30	45.20	15.10	**PD/560**	Pag.: 427
140.40	57.60/59.70	17.40	**PD/1058**	Pag.: 427
140.10/141.30	48.30	16.50	**PD/42**	Pag.: 427
140.10/141.30	48.30	16.50	**PD/364-A**	Pag.: 427
140.20/141.50	50.80	17.10	**PD/1357**	Pag.: 427
140.50	47.40/49.40	17.70	**PD/519**	Pag.: 428
140.50	48.80/49.50	14.00	**PD/588**	Pag.: 428
140.50	65.60	18.30	**PD/498-A**	Pag.: 428
140.60	49.40	15.10	**PD/736**	Pag.: 428
140.80	60.20	16.90	**PD/1497**	Pag.:428
140.80	63.90	19.30	**PD/1512**	Pag.:428
140.90	49.00	14.00	**PD/775**	Pag.: 428
140.90	62.20	17.00	**PD/686**	Pag.: 428
141.00	48.30	15.50	**PD/1428**	Pag.: 428

WIDTH ANCHO	HEIGHT ALTURA	THICKNESS ESPESOR	FRAS-LE	DRAWINGS DIBUJOS
141.00	59.60	16.90	**PD/764**	Pag.: 428
141.10	49.30	15.70	**PD/705**	Pag.: 428
141.10	49.30	16.00	**PD/704**	Pag.: 429
141.40	47.00	16.30	**PD/1399**	Pag.: 429
141.40	50.00	17.30	**PD/659-A**	Pag.: 429
141.40	72.70	21.00	**PD/190**	Pag.: 429
141.70	56.50	16.90	**PD/644**	Pag.: 429
141.70	61.10	15.80	**PD/1419**	Pag.:429
141.70	61.20	17.80	**PD/1426**	Pag.:429
141.80	50.60/51.20	16.00	**PD/368**	Pag.: 429
141.80	50.60/51.20	17.20	**PD/367**	Pag.: 429
141.80	51.20	17.20	**PD/1100**	Pag.: 429
142.00	59.70	16.10	**PD/785**	Pag.: 429
142.30	47.80	15.80	**PD/566**	Pag.: 430
142.30	50.60	16.80	**PD/1347**	Pag.: 430
142.60	46.80	15.50	**PD/615**	Pag.: 430
142.60	48.30/52.00	17.00	**PD/802**	Pag.: 430
142.60	55.50	15.60	**PD/429**	Pag.: 430
142.70	45.00	16.90	**PD/731**	Pag.: 430
142.70/199.50	61.00/62.50	15.20/16.40	**PD/679**	Pag.: 430
143.00	45.20	15.10	**PD/556**	Pag.: 430
143.00	51.30	16.90	**PD/817**	Pag.: 431
143.00	51.50	16.30	**PD/720**	Pag.: 431
143.00	51.50	17.10	**PD/574**	Pag.: 431
143.00	51.60	17.00	**PD/475**	Pag.: 431
143.30	58.50	15.50	**PD/743**	Pag.: 431
143.50	67.00	16.70	**PD/1089**	Pag.: 431
143.50	67.00	16.70	**PD/1098**	Pag.: 431
143.80	83.10	17.90	**PD/1084**	Pag.: 431
143.90	63.80	17.00	**PD/784**	Pag.: 431
144.30	62.60	17.50	**PD/733**	Pag.: 431
144.50	48.90	14.40	**PD/672**	Pag.: 431
144.50	66.70	18.40	**PD/1034**	Pag.: 431
144.50	70.50	17.10	**PD/702**	Pag.: 431
144.80	60.80	19.50	**PD/358**	Pag.: 431
144.80	60.80	19.50	**PD/358-A**	Pag.: 431
144.80	60.80	19.50	**PD/369-B**	Pag.: 431
144.90	55.10	15.80	**PD/631**	Pag.: 431
144.90	55.10	15.90/17.30	**PD/734**	Pag.: 432
144.90	62.40	17.00	**PD/1387**	Pag.: 432
145.00	54.90	16.30	**PD/1353**	Pag.: 432
145.00	55.50	15.30	**PD/1075**	Pag.: 432
145.00	55.60	15.50	**PD/446**	Pag.: 432
145.50	57.40	15.50	**PD/1358**	Pag.: 432
145.70	61.10	15.90	**PD/114**	Pag.: 432
145.80	63.40	17.50	**PD/107**	Pag.: 432
146.00	53.90	16.20	**PD/1346**	Pag.: 432
146.00	54.70	19.50	**PD/58**	Pag.: 432
146.00	54.70	19.50	**PD/58-B**	Pag.: 432
146.00	54.70	19.50	**PD/73**	Pag.: 432
146.00	54.70	19.50	**PD/73-B**	Pag.: 432

WIDTH ANCHO	HEIGHT ALTURA	THICKNESS ESPESOR	FRAS-LE	DRAWINGS DIBUJOS
146.00	54.80	16.80	**PD/804**	Pag.: 433
146.40	59.20	17.40	**PD/580**	Pag.: 433
146.60	57.30	17.60	**PD/744**	Pag.: 433
146.60	60.00	18.10	**PD/1443-A**	Pag.: 433
146.60	63.40	16.60	**PD/1026**	Pag.: 433
146.70	58.00	18.90	**PD/732**	Pag.: 433
146.75	54.00	16.30	**PD/1499**	Pag.:433
147.60	56.70	16.80	**PD/769**	Pag.: 433
147.60	61.60	17.00	**PD/564**	Pag.: 433
147.60	61.60	17.00	**PD/674**	Pag.: 433
147.50/190.40	66.1/66.50	12.80/15.30	**PD/506**	Pag.: 433
147.50/213.20	66.70/67.10	16.00/17.30	**PD/697**	Pag.: 433
147.70	57.10	16.80	**PD/799**	Pag.: 434
147.60/212.20	67.10/67.60	16.00/17.30	**PD/609**	Pag.: 434
147.90/190.40	66.50/67.30	13.60/14.60	**PD/508**	Pag.: 434
148.00	61.30	18.00	**PD/1514**	Pag.:434
148.10	47.00/61.50	16.90	**PD/1047**	Pag.: 434
148.30	60.30	18.10	**PD/1101**	Pag.: 434
148.60	59.60	16.30	**PD/1413**	Pag.: 434
148.60	60.90	15.80	**PD/1494**	Pag.:434
148.70	60.60	17.40	**PD/586**	Pag.: 434
148.80	54.90	16.60	**PD/1412**	Pag.: 434
148.80	57.60	17.50	**PD/649-E**	Pag.: 434
148.80	58.70	17.30	**PD/719**	Pag.: 434
148.80	58.70	17.30	**PD/1388**	Pag.: 434
148.80	62.00	16.90	**PD/1421**	Pag.: 435
148.90	57.80	17.30	**PD/449**	Pag.: 435
148.90	58.80	16.30	**PD/667**	Pag.: 435
148.90	58.80	19.00	**PD/353**	Pag.: 435
149.00	58.00	16.40	**PD/630**	Pag.: 435
149.00	69.00	18.00	**PD/150-A**	Pag.: 435
149.00	69.00	18.00	**PD/191-A**	Pag.: 435
149.00	69.00	18.00	**PD/192-A**	Pag.: 435
149.00	69.00	18.00	**PD/360-A**	Pag.: 435
149.10	62.20	16.50	**PD/711**	Pag.: 435
149.20	52.90	15.10	**PD/486**	Pag.: 435
149.70	58.60	15.70	**PD/383**	Pag.: 435
150.00	58.50	15.70	**PD/675**	Pag.: 435
150.10	50.30	15.80	**PD/1018**	Pag.: 436
150.30	50.00	16.00	**PD/349**	Pag.: 436
150.10/151.30	52.50	17.80	**PD/494**	Pag.: 436
150.10/151.30	52.50	17.80	**PD/1482**	Pag.: 436
150.10/151.30	52.50	17.80	**PD/1482-B**	Pag.: 436
150.10/151.30	58.20/61.00	18.00	**PD/80**	Pag.: 436
150.10/151.30	58.20/61.00	18.00	**PD/497**	Pag.: 436
150.10/151.50	51.70/54.00	17.50	**PD/1378**	Pag.: 436
150.30/151.30	58.00/59.10	14.50	**PD/503**	Pag.: 436
150.60	52.70	17.50	**PD/1488**	Pag.: 437
150.60	56.30	17.80	**PD/805**	Pag.: 437
150.70	61.20	17.00	**PD/1470**	Pag.: 437
150.80	57.50	19.30	**PD/673-B**	Pag.: 437

WIDTH ANCHO	HEIGHT ALTURA	THICKNESS ESPESOR	FRAS-LE	DRAWINGS DIBUJOS
150.30/151.50	51.30	16.50	**PD/685**	Pag.: 437
151.00	56.40	14.80	**PD/500**	Pag.: 437
151.10	52.50	16.40	**PD/543**	Pag.: 437
151.30	46.30	17.30	**PD/390**	Pag.: 437
151.30	46.30	18.00	**PD/24**	Pag.: 437
151.30	46.30	18.00	**PD/24-A**	Pag.: 437
151.30	46.30	18.00	**PD/24-B**	Pag.: 437
151.30	46.30	18.00	**PD/34**	Pag.: 437
151.30	46.40	16.60	**PD/65**	Pag.: 437
151.30	46.40	16.60	**PD/79**	Pag.: 437
151.30	49.20	15.00	**PD/81**	Pag.: 438
151.30	49.20	15.80	**PD/28**	Pag.: 438
151.30	49.20	15.80	**PD/28-B**	Pag.: 438
151.30	49.20	15.80	**PD/51**	Pag.: 438
151.30	49.20	17.00	**PD/90**	Pag.: 438
151.30	49.20	18.00	**PD/25**	Pag.: 438
151.30	49.20	18.00	**PD/25-A**	Pag.: 438
151.30	49.20	18.00	**PD/25-B**	Pag.: 438
151.30	49.20	18.00	**PD/25-RA**	Pag.: 438
151.30	49.20	18.00	**PD/25-RA-A**	Pag.: 438
151.30	49.20	18.00	**PD/25-RA-B**	Pag.: 438
151.30	49.20	18.00	**PD/25-RA-FA**	Pag.: 438
151.30	49.20	18.00	**PD/25-RA-FB**	Pag.: 438
151.30	49.20	18.00	**PD/25-RA-P**	Pag.: 438
151.30	49.20	18.00	**PD/25-RA-R**	Pag.: 438
151.30	49.20	18.00	**PD/47**	Pag.: 438
151.30	49.20	18.00	**PD/47-A**	Pag.: 438
151.30	49.20	18.00	**PD/47-RA-P**	Pag.: 438
151.30	49.20	18.00	**PD/60**	Pag.: 438
151.30	49.20	18.00	**PD/60-A**	Pag.: 438
151.30	49.20	18.00	**PD/87**	Pag.: 438
151.30	49.20	18.00	**PD/89**	Pag.: 438
151.30	49.20	19.30	**PD/23**	Pag.: 439
151.30	52.00	17.90	**PD/433-B**	Pag.: 439
151.30	52.50	17.30	**PD/48**	Pag.: 439
151.30	52.50	17.30	**PD/48-A**	Pag.: 439
151.30	52.50	17.30	**PD/68**	Pag.: 439
151.30	52.50	17.30	**PD/68-B**	Pag.: 439
151.30	52.50	17.30	**PD/88**	Pag.: 439
151.30	52.50	18.00	**PD/39**	Pag.: 439
151.40	60.50/68.00	18.90	**PD/1043**	Pag.: 439
151.50	47.30	16.30	**PD/85**	Pag.: 439
151.50	47.30	16.30	**PD/94**	Pag.: 439
151.50	57.50	17.50	**PD/385**	Pag.: 439
151.50	61.50	16.03	**PD/1342**	Pag.:439
151.90	60.90	16.00	**PD/1433**	Pag.: 439
153.90	53.30	16.30	**PD/577**	Pag.: 439
154.00	56.30	16.00	**PD/69**	Pag.: 439
154.00	56.50	17.00	**PD/332**	Pag.: 440
155.00/155.20	67.50/68.40	17.50/18.00	**PD/1370**	Pag.: 440
155.00/156.30	68.90/72.10	17.60/17.80	**PD/786**	Pag.: 440

WIDTH ANCHO	HEIGHT ALTURA	THICKNESS ESPESOR	FRAS-LE	DRAWINGS DIBUJOS
154.00	58.30	17.50	**PD/64**	Pag.: 440
154.00	58.50	17.00	**PD/354**	Pag.: 440
154.00	63.50	14.80	**PD/331**	Pag.: 440
154.20	53.30	16.50	**PD/365**	Pag.: 440
155.00	58.40	17.90	**PD/809**	Pag.: 440
155.00	58.40	17.90	**PD/1393**	Pag.: 440
155.00	60.00	16.50	**PD/634**	Pag.: 440
155.10	64.00	15.80	**PD/1298**	Pag.: 440
155.10	64.60/68.60	15.00	**PD/1447**	Pag.: 440
155.10/156.30	59.10/61.80	18.50	**PD/66**	Pag.: 441
155.10/156.30	59.10/61.80	18.50	**PD/66-A**	Pag.: 441
155.10/156.30	59.10/61.80	18.50	**PD/66-B**	Pag.: 441
155.10/156.30	59.10/61.80	18.50	**PD/78-A**	Pag.: 441
155.10/156.30	59.10/61.80	18.50	**PD/92**	Pag.: 441
155.10/156.30	59.10/61.80	18.50	**PD/92-B**	Pag.: 441
155.10/156.30	71.50/78.50	19.50	**PD/72**	Pag.: 441
155.10/156.30	71.50/78.50	19.50	**PD/93**	Pag.: 441
155.10/156.30	71.50/78.50	19.50	**PD/676**	Pag.: 441
155.10/156.30	74.00	19.50	**PD/61**	Pag.: 442
155.10/156.40	63.00/68.40	17.60	**PD/1376**	Pag.: 442
155.10/156.40	72.80	19.30	**PD/1232-B**	Pag.: 442
155.20	58.60	18.50	**PD/352**	Pag.: 442
155.20	58.60	18.50	**PD/352-A**	Pag.: 442
155.20	59.40/64.40	17.20	**PD/1377**	Pag.: 442
155.20	59.60/65.00	17.50	**PD/1422**	Pag.: 442
155.20	66.30/76.00	19.00	**PD/1432**	Pag.: 442
155.20	66.60/71.90	17.50/18.50	**PD/1301**	Pag.: 442
155.20	66.70/72.00	18.90/19.90	**PD/1457-B**	Pag.: 443
155.20/156.50	45.20	19.40	**PD/1044**	Pag.: 443
155.20/156.50	66.30/71.40	19.30	**PD/1000**	Pag.: 443
155.20/156.50	66.30/71.40	19.30	**PD/1000-B**	Pag.: 443
155.20/156.50	73.70/74.80	18.30/19.80	**PD/1063**	Pag.: 443
155.20/156.50	74.00	19.20	**PD/729**	Pag.: 443
155.30/156.40	68.50/70.80	17.20	**PD/1444**	Pag.: 443
155.40	61.90	19.60	**PD/134**	Pag.: 443
155.40	66.80/69.10	16.90	**PD/1398**	Pag.: 444
155.50	48.80	16.00	**PD/780**	Pag.: 444
155.50	50.80	15.90	**PD/582**	Pag.: 444
155.70	51.00	16.00	**PD/771**	Pag.: 444
155.70	56.60	18.20	**PD/318-A**	Pag.: 444
155.40/156.60	62.30	17.30	**PD/767**	Pag.: 444
155.40/156.60	62.40/67.00	17.30	**PD/1103**	Pag.: 444
156.30	52.50	17.50	**PD/37**	Pag.: 444
156.30	52.60	17.50	**PD/52**	Pag.: 444
156.30	52.60/62.50	17.30	**PD/84**	Pag.: 444
156.30	52.60/62.50	17.80/18.00	**PD/77**	Pag.: 445
156.30	52.70	17.50	**PD/403-B**	Pag.: 445
156.30	54.30	17.50	**PD/44**	Pag.: 445
156.30	54.30	17.50	**PD/44-B**	Pag.: 445
156.30	74.00	19.50	**PD/340-B**	Pag.: 445
156.30	74.00	19.50	**PD/384**	Pag.: 445

WIDTH ANCHO	HEIGHT ALTURA	THICKNESS ESPESOR	FRAS-LE	DRAWINGS DIBUJOS
156.30	74.00	19.50	**PD/384-A**	Pag.: 445
156.30	74.00	19.50	**PD/525-A**	Pag.: 445
156.30	78.50	17.90	**PD/481-A**	Pag.: 445
156.40	55.00	18.50	**PD/341**	Pag.: 445
156.40	55.00	18.50	**PD/341-A**	Pag.: 445
156.40	58.60	18.60	**PD/783**	Pag.: 445
156.50	63.30	19.30	**PD/1003**	Pag.: 445
156.50	64.80	20.50	**PD/417**	Pag.: 445
156.50	64.80	20.50	**PD/417-A**	Pag.: 445
156.50	71.80	18.30	**PD/1042-A**	Pag.: 446
156.70	66.50	18.40/19.70	**PD/530**	Pag.: 446
156.80	60.80	15.80	**PD/1287**	Pag.: 446
156.80	61.20	16.40	**PD/1352**	Pag.: 446
157.20	58.00	15.90	**PD/1014**	Pag.: 446
157.20	63.50	17.00	**PD/1067**	Pag.: 446
157.70	57.30	17.60	**PD/1078**	Pag.: 446
157.70	58.30	18.00	**PD/1406**	Pag.: 446
157.70	60.20	18.70	**PD/755**	Pag.: 446
157.60/182.90	58.40/62.50	20.30/27.60	**PD/19-C**	Pag.: 446
157.60/182.90	58.40/62.50	20.30/27.60	**PD/523**	Pag.: 446
158.70	52.20	18.40	**PD/63**	Pag.: 447
158.80	55.30	16.50	**PD/561**	Pag.: 447
158.80	55.30	16.50	**PD/562**	Pag.: 447
158.30/158.70	49.90	17.90	**PD/591**	Pag.: 447
159.00	55.00	15.30	**PD/1400**	Pag.: 447
159.90	64.10	19.50	**PD/422**	Pag.: 447
159.90	64.10	19.50	**PD/422-A**	Pag.: 447
159.90	64.10	19.50	**PD/438-B**	Pag.: 447
159.20/220.00	56.30/60.30	18.30/19.30	**PD/568**	Pag.: 447
160.00/169.60	51.20/62.50	14.00/14.50	**PD/605**	Pag.: 447
160.10	64.50	19.10	**PD/1490-B**	Pag.: 448
160.00/177.60	62.00/63.00	17.00/18.50	**PD/57**	Pag.: 448
160.20/172.00	62.60/63.60	14.00/15.00	**PD/374**	Pag.: 448
160.20/172.00	62.60/63.60	14.00/15.00	**PD/513**	Pag.: 448
161.00	49.80	17.00	**PD/427**	Pag.: 448
161.20	57.70/62.80	16.20	**PD/714**	Pag.: 448
161.20	57.70/62.80	16.60	**PD/567**	Pag.: 448
161.20	57.70/62.80	16.60	**PD/772**	Pag.: 448
162.30	79.50	17.40	**PD/1345-E**	Pag.: 448
162.60	54.50	16.60	**PD/1381**	Pag.: 449
162.60	54.80	16.60	**PD/1382**	Pag.: 449
162.60	68.40	17.40	**PD/1069**	Pag.: 449
163.00	58.30	16.00	**PD/814**	Pag.: 449
163.10	67.00	20.00	**PD/662**	Pag.: 449
163.10	67.00	20.10	**PD/1405-A**	Pag.: 449
163.20	57.50	16.90	**PD/1008**	Pag.: 449
163.40	66.70	21.40	**PD/189**	Pag.: 449
163.40	66.70	21.40	**PD/189-A**	Pag.: 449
163.60	54.10	15.90	**PD/811**	Pag.: 449
163.60	64.80	17.50	**PD/1439-B**	Pag.: 449
164.00	77.10	17.00	**PD/105**	Pag.: 449

WIDTH ANCHO	HEIGHT ALTURA	THICKNESS ESPESOR	FRAS-LE	DRAWINGS DIBUJOS
164.00	77.10	17.00	**PD/106**	Pag.: 449
164.00	80.00	21.80	**PD/103**	Pag.: 449
164.30	45.20/46.20	17.20	**PD/542**	Pag.: 450
164.30	58.00	17.80	**PD/575**	Pag.: 450
164.30/172.80	54.40/64.60	16.00/18.00	**PD/504**	Pag.: 450
164.40	67.80	19.90	**PD/1418-A**	Pag.: 450
164.50	56.90	16.00	**PD/534**	Pag.: 450
164.50	56.90	16.90	**PD/536**	Pag.: 450
164.50	67.80	20.00	**PD/208**	Pag.: 450
164.80	61.70	16.10	**PD/553**	Pag.: 450
164.90	61.80	19.90	**PD/1094-A**	Pag.: 450
164.90	78.10	20.40	**PD/664**	Pag.: 450
164.50/165.20	51.60/54.80	14.90/17.00	**PD/510**	Pag.: 450
164.50/165.20	51.60/54.80	16.20	**PD/492**	Pag.: 450
164.50/165.20	51.60/54.80	16.20/18.20	**PD/396**	Pag.: 450
164.60	63.50	17.00	**PD/1359**	Pag.: 451
164.60	66.50	20.30	**PD/122**	Pag.: 451
164.60	66.50	20.30	**PD/122-A**	Pag.: 451
164.60	66.50	20.30	**PD/188-A**	Pag.: 451
164.60	73.00	20.00	**PD/111**	Pag.: 451
164.60	73.00	20.00	**PD/111-A**	Pag.: 451
164.60	73.00	20.00	**PD/121**	Pag.: 451
164.60	73.00	20.00	**PD/121-A**	Pag.: 451
164.70	69.90	18.30	**PD/652**	Pag.: 451
164.70	69.90	18.30	**PD/652-B**	Pag.: 451
164.50/165.20	51.60/54.80	16.20/18.20	**PD/515**	Pag.: 451
165.00	58.40	16.90	**PD/665**	Pag.: 451
165.00	65.50	18.80	**PD/1091-A**	Pag.: 452
165.00	66.80	18.90	**PD/1028**	Pag.: 452
165.00	66.80	18.90	**PD/1028-B**	Pag.: 452
165.00	68.80	16.40	**PD/618**	Pag.: 452
165.20	42.80	16.40	**PD/395**	Pag.: 452
165.40	60.00	15.80	**PD/1429**	Pag.: 452
165.30/179.50	61.50/63.60	12.70	**PD/545**	Pag.: 452
165.30/179.50	61.50/63.60	12.70/17.50	**PD/537**	Pag.: 452
166.20	49.30	15.80	**PD/584**	Pag.: 452
166.20	62.10	20.00	**PD/366**	Pag.: 452
166.30	49.10	15.50	**PD/759**	Pag.: 452
166.30	57.10	16.30	**PD/137**	Pag.: 452
166.40	50.00	15.90	**PD/1066**	Pag.: 452
166.60	62.20	17.00	**PD/108**	Pag.: 452
166.90	61.10	15.20	**PD/776**	Pag.: 452
166.90	61.10	16.00	**PD/110**	Pag.: 453
167.40	54.00	16.20	**PD/801**	Pag.: 453
167.90	50.50	15.40	**PD/1032**	Pag.: 453
168.50	58.20	16.90	**PD/597**	Pag.: 453
168.50	64.00	18.00	**PD/342**	Pag.: 453
168.80	61.50	16.90	**PD/650-E**	Pag.: 453
168.80	61.60	19.00	**PD/1099-B**	Pag.: 453
169.10	69.10	18.40	**PD/1397-B**	Pag.: 453
169.20	73.40	20.30	**PD/661**	Pag.: 453

WIDTH ANCHO	HEIGHT ALTURA	THICKNESS ESPESOR	FRAS-LE	DRAWINGS DIBUJOS
169.50	50.00/59.00	16.00	**PD/471-A**	Pag.: 453
169.70	62.50	17.90	**PD/1390**	Pag.: 454
170.00/171.00	74.70/76.80	18.70/19.10	**PD/1452**	Pag.: 454
170.40/172.20	59.20	15.00	**PD/803**	Pag.: 454
172.60	65.80	17.80	**PD/581**	Pag.: 454
172.70	59.90	17.00	**PD/1015**	Pag.: 454
172.70	59.90	20.00	**PD/589**	Pag.: 454
173.80/185.00	84.00	27.00/34.00	**PD/533**	Pag.: 454
173.80/185.00	84.10	27.00/34.00	**PD/526**	Pag.: 454
174.40	69.30	20.00	**PD/339-A**	Pag.: 454
174.50	69.50	20.00	**PD/420**	Pag.: 454
174.50	69.50	20.00	**PD/420-A**	Pag.: 455
174.80	85.40	21.80	**PD/139**	Pag.: 455
175.00	85.50	21.80	**PD/104**	Pag.: 455
175.00	85.50	21.80	**PD/104-A**	Pag.: 455
175.00	85.50	21.80	**PD/355**	Pag.: 455
175.10	88.40	17.00	**PD/113**	Pag.: 455
175.20	77.00	22.20	**PD/154**	Pag.: 455
175.40	78.00	22.00	**PD/123**	Pag.: 455
175.50	61.00	20.60	**PD/1424**	Pag.: 455
175.50	85.50	26.00	**PD/117**	Pag.: 455
175.50	85.50	26.00	**PD/117-A**	Pag.: 455
175.50	85.50	26.00	**PD/124**	Pag.: 455
175.70	89.00	30.00	**PD/159**	Pag.: 455
175.80	59.00	19.90	**PD/590**	Pag.: 455
176.00	109.70	16.20	**PD/1450**	Pag.: 455
176.00	52.90	18.10	**PD/1019**	Pag.: 455
176.00	54.40	17.10	**PD/779**	Pag.: 455
176.00	57.20	18.00	**PD/807**	Pag.: 456
176.00	78.20	21.00	**PD/140-A**	Pag.: 456
176.00	83.20	22.00	**PD/152**	Pag.: 456
177.00	54.20	17.00	**PD/418**	Pag.: 456
177.00	55.00	17.20	**PD/708**	Pag.: 456
177.00	62.70	16.70	**PD/737**	Pag.: 456
177.20	47.30	15.00/16.00	**PD/135**	Pag.: 456
177.20	68.60	19.90	**PD/656**	Pag.: 456
177.20	68.60	19.90	**PD/1006**	Pag.: 456
177.30	55.50	18.00	**PD/642**	Pag.: 456
177.30	55.80	18.00	**PD/800**	Pag.: 456
177.30	63.00	22.90	**PD/643**	Pag.: 457
177.40	59.20	17.80	**PD/641**	Pag.: 457
177.50	59.20	18.30	**PD/572**	Pag.: 457
177.70	61.20	17.70	**PD/808**	Pag.: 457
177.80	58.30/60.70	18.10	**PD/1367**	Pag.: 457
177.80	58.40/60.90	19.00	**PD/442**	Pag.: 457
178.00	68.70	20.80	**PD/1411**	Pag.: 457
178.30	59.00	17.80	**PD/1024**	Pag.: 457
180.00	61.30	18.10	**PD/1414**	Pag.: 457
180.00	86.00	20.40	**PD/169-E**	Pag.: 457
180.00	86.00	20.50	**PD/155-E**	Pag.: 457
181.40	65.50	17.40	**PD/1427**	Pag.: 457

WIDTH ANCHO	HEIGHT ALTURA	THICKNESS ESPESOR	FRAS-LE	DRAWINGS DIBUJOS
182.60	52.60	14.10	**PD/747**	Pag.: 457
182.60	61.40	14.40	**PD/713**	Pag.: 457
182.80/206.70	65.80/70.10	15.80/20.10	**PD/541**	Pag.: 458
182.90/197.40	68.70/69.90	12.50/16.90	**PD/606**	Pag.: 458
183.00	64.00	15.50	**PD/436**	Pag.: 458
183.10	63.50	18.10	**PD/1408**	Pag.: 458
183.30	55.80	17.20	**PD/1020**	Pag.: 458
183.50	60.40	15.50	**PD/722**	Pag.: 458
183.60	61.10	16.20	**PD/578**	Pag.: 458
183.60	61.10	16.20	**PD/760**	Pag.: 458
183.00/237.70	69.70/92.20	22.00	**PD/655**	Pag.: 458
183.20/238.20	67.30/93.10	22.00	**PD/1004**	Pag.: 458
183.30/197.40	65.70/70.20	9.30/10.90	**PD/1001**	Pag.: 458
183.80/197.80	58.60/65.50	13.00/14.30	**PD/774**	Pag.: 459
184.00	64.60	22.80	**PD/201**	Pag.: 459
184.20	60.10/63.80	18.00	**PD/594**	Pag.: 459
184.20/197.30	63.00/65.70	14.20/15.00	**PD/324**	Pag.: 459
185.00	59.70	16.50	**PD/763**	Pag.: 459
185.10	61.50	17.00	**PD/348**	Pag.: 459
185.40	58.00	16.30	**PD/770**	Pag.: 459
187.30	75.80	16.00	**PD/1464**	Pag.: 459
188.00	55.80	14.70	**PD/1033**	Pag.: 459
188.00	56.10	15.60	**PD/1040**	Pag.: 459
188.00	59.00/81.80	15.60/16.60	**PD/1007-A**	Pag.: 460
188.00	72.90/73.50	17.70	**PD/1454**	Pag.: 460
188.00	73.60/80.80	18.40	**PD/1455**	Pag.: 460
188.10	55.90	15.80	**PD/555**	Pag.: 460
188.30	54.30	16.60	**PD/622**	Pag.: 460
188.40	55.70	15.80	**PD/569**	Pag.: 460
188.50	50.00	19.80	**PD/1057**	Pag.: 460
188.50	56.50	16.50	**PD/565**	Pag.: 460
188.50	56.50	17.50	**PD/583**	Pag.: 460
189.20	56.40	16.60	**PD/757**	Pag.: 461
189.20	56.40	17.50	**PD/758**	Pag.: 461
189.60	96.00	15.40	**PD/1460**	Pag.: 461
190.20	104.80	15.20	**PD/1079**	Pag.: 461
190.20	98.80	15.40	**PD/1064**	Pag.: 461
191.00	87.00	23.00	**PD/148**	Pag.: 461
191.00	87.00	23.00	**PD/148-A**	Pag.: 461
191.00	87.00	23.00	**PD/193-A**	Pag.: 461
191.70	60.10/72.80	20.20	**PD/485**	Pag.: 461
191.70	60.20/73.20	20.00	**PD/623**	Pag.: 461
191.70	69.90	16.40	**PD/608**	Pag.: 461
191.70	69.90	16.60	**PD/539**	Pag.: 461
192.30/194.40	55.40	17.80	**PD/620**	Pag.: 462
193.00	76.60/79.30	18.70/19.60	**PD/1458**	Pag.: 462
193.10	64.00	18.90	**PD/62**	Pag.: 462
193.10	72.70	19.10	**PD/1449-A**	Pag.: 462
193.50	110.00	25.00	**PD/156**	Pag.: 462
193.00/193.20	70.80/73.70	19.20	**PD/1374**	Pag.: 462
193.30/194.30	76.30	18.20	**PD/1459**	Pag.: 462

WIDTH ANCHO	HEIGHT ALTURA	THICKNESS ESPESOR	FRAS-LE	DRAWINGS DIBUJOS
193.30/194.60	65.50	18.70	**PD/1354**	Pag.: 462
194.00	55.00	16.00	**PD/356**	Pag.: 462
194.00	68.00	16.00	**PD/1434**	Pag.: 462
194.30	73.60	19.70	**PD/1472**	Pag.: 463
195.20	54.40	17.90	**PD/1389**	Pag.: 463
195.30	54.70	17.50	**PD/1023**	Pag.: 463
202.20	65.80	15.30/17.00	**PD/1087**	Pag.: 463
204.00	96.00	24.00	**PD/166**	Pag.: 463
204.50	106.00	27.00	**PD/168-A**	Pag.: 463
204.60	97.00	30.00	**PD/161**	Pag.: 463
204.60	97.00	30.00	**PD/194**	Pag.: 463
204.90/265.30	80.60/96.80	18.00/28.00	**PD/1478**	Pag.: 463
204.90/265.50	80.60/94.90	16.70/21.80	**PD/557**	Pag.: 463
205.40	102.00	27.00	**PD/138**	Pag.: 463
205.00/265.50	80.00/95.90	16.60/21.90	**PD/133**	Pag.: 463
205.00/269.80	80.00/100.10	23.20/27.90	**PD/127**	Pag.: 463
206.00	74.70	20.00	**PD/624**	Pag.: 463
206.10	80.00	19.80	**PD/625**	Pag.: 464
207.30	113.70	30.00	**PD/206**	Pag.: 464
209.40	94.70	16.00	**PD/1463**	Pag.: 464
210.00	102.40	29.80	**PD/160**	Pag.: 464
210.00	92.00	30.00	**PD/209**	Pag.: 464
210.20	76.70	19.80	**PD/626**	Pag.: 464
210.30	55.70/64.30	20.80	**PD/750**	Pag.: 464
210.40	109.00	31.00	**PD/164**	Pag.: 464
210.50	92.50	29.80	**PD/131**	Pag.: 464
210.50	92.50	30.00	**PD/142**	Pag.: 464
210.50	94.00	30.00	**PD/213**	Pag.:464
210.70	100.70	30.00	**PD/130**	Pag.: 464
210.70	92.50	30.00	**PD/120**	Pag.: 464
210.90	108.0	30.00	**PD/172**	Pag.: 464
210.90	108.00	30.00	**PD/147**	Pag.: 464
213.40	100.70	19.00	**PD/126**	Pag.: 464
214.40	71.20	18.70	**PD/1086**	Pag.: 464
216.00	67.00	18.20	**PD/571**	Pag.: 465
216.00	67.00	19.50	**PD/746**	Pag.: 465
216.00	96.80	14.90	**PD/202**	Pag.: 465
216.00	97.00	29.00	**PD/195**	Pag.: 465
217.85	107.30	30.50	**PD/214**	Pag.:465
218.00	69.10	19.30	**PD/639**	Pag.: 465

WIDTH ANCHO	HEIGHT ALTURA	THICKNESS ESPESOR	FRAS-LE	DRAWINGS DIBUJOS
219.50	59.30	18.60	**PD/627**	Pag.: 465
219.80	62.80	18.30	**PD/637**	Pag.: 465
219.60/235.60	74.70	20.70	**PD/654**	Pag.: 465
220.00	59.30	18.60	**PD/576**	Pag.: 465
220.30	56.80	17.90	**PD/777**	Pag.: 465
220.30	56.80	18.70	**PD/559**	Pag.: 465
221.50	64.50	20.20	**PD/587**	Pag.: 465
221.50	64.50	20.20	**PD/640**	Pag.: 465
221.50	64.50	20.70	**PD/570**	Pag.: 465
228.30	102.60	25.40	**PD/653**	Pag.: 465
234.20/235.50	62.00/64.00	18.70/19.00	**PD/1083**	Pag.:466
235.60	109.00	29.00	**PD/179**	Pag.:466
237.50	62.10	19.70	**PD/524**	Pag.: 466
240.00	88.50	25.40	**PD/143**	Pag.: 466
240.00	88.50	25.40	**PD/144**	Pag.: 466
240.50	124.80	26.00	**PD/128**	Pag.: 466
244.30	113.70	30.00	**PD/205**	Pag.: 466
244.40	85.20	20.30	**PD/145**	Pag.: 466
244.40	85.20	26.80	**PD/146**	Pag.: 466
247.50	107.60	30.00	**PD/197**	Pag.: 466
247.50	109.50	30.00	**PD/116**	Pag.: 466
247.50	109.50	30.00	**PD/141**	Pag.: 466
247.60	105.00	30.00	**PD/186**	Pag.: 466
247.60	108.30	30.00	**PD/170**	Pag.: 466
248.60	117.50	30.00	**PD/207**	Pag.: 466
249.30	114.30	28.20	**PD/112**	Pag.: 466
249.40	110.90	29.00	**PD/529**	Pag.:467
249.50	107.00	29.40	**PD/196**	Pag.:467
249.50	118.20	28.00	**PD/125**	Pag.:467
249.50	118.20	30.00	**PD/125 C/30.0**	Pag.:467
249.60	118.00	30.00	**PD/129**	Pag.: 467
249.90	116.50	29.00	**PD/187**	Pag.: 467
249.90	99.80	30.00	**PD/204**	Pag.: 467
277.00	103.00	24.00	**PD/373**	Pag.: 467
277.80	85.70	22.20	**PD/29**	Pag.: 467
288.30	80.00	20.10	**PD/178**	Pag.: 467
288.40	80.00	20.10	**PD/177**	Pag.: 467
320.50	108.00	23.80	**PD/370**	Pag.: 467
413.00	131.80	25.40	**PD/372**	Pag.: 467
443.70	141.20	25.00	**PD/371**	Pag.: 467

PD/490
WVA 20162 — Citroën System / Sistema Citroën

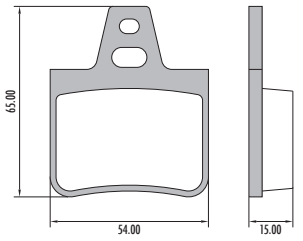

PD/5
WVA 20009 — FMSI 755 D21 - 735 D30 — Teves System / Sistema Teves

SHIM/ANTIRRUIDO

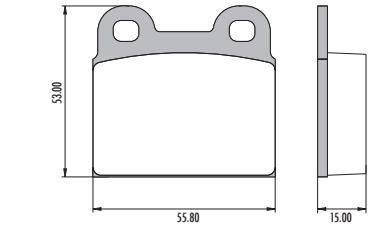

PD/41
WVA 21140 — FMSI 7314 D426 — Teves System / Sistema Teves

SHIM/ANTIRRUIDO

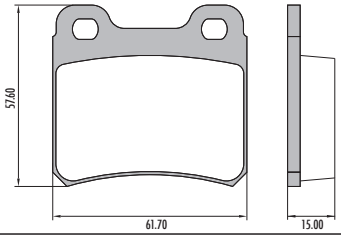

PD/36
WVA 21832 — FMSI 7566 D693 — Teves System / Sistema Teves

SHIM/ANTIRRUIDO

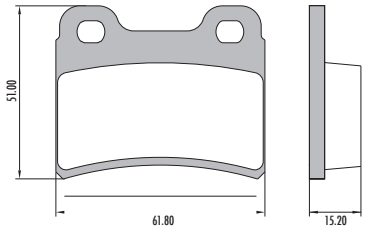

PD/6
WVA 20034 — FMSI 7255 D31 — Teves System / Sistema Teves

SHIM/ANTIRRUIDO

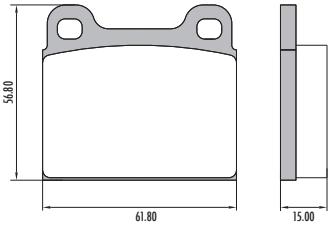

PD/16
WVA 20228 — FMSI 7032 D96 — Teves System / Sistema Teves

SHIM/ANTIRRUIDO

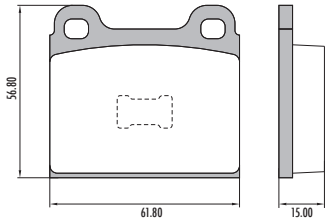

PD/17
WVA 20228 — FMSI 7032 D96 — Teves System / Sistema Teves

SHIM/ANTIRRUIDO

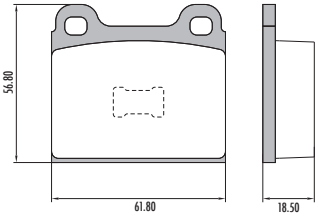

PD/38
WVA 21050 — FMSI 7582 D709 - 7614 D709 — Teves System / Sistema Teves

SHIM/ANTIRRUIDO

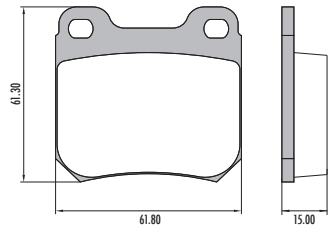

PD/316
Girling System / Sistema Girling

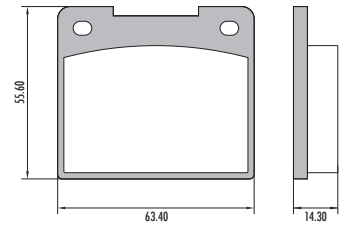

PD/1046
WVA 21900 — FMSI 7608 D739

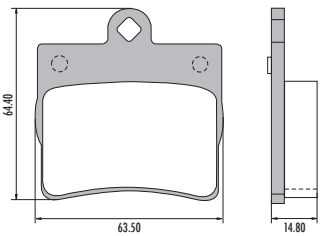

PD/1050
WVA 21919 — FMSI 7647 D779

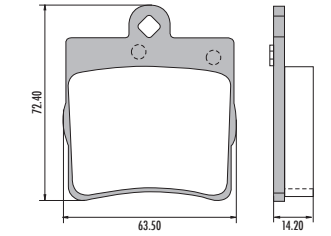

PD/1055-A
WVA 23711/ 23712 — FMSI 8745 D1536 — Bosch System / Sistema Bosch

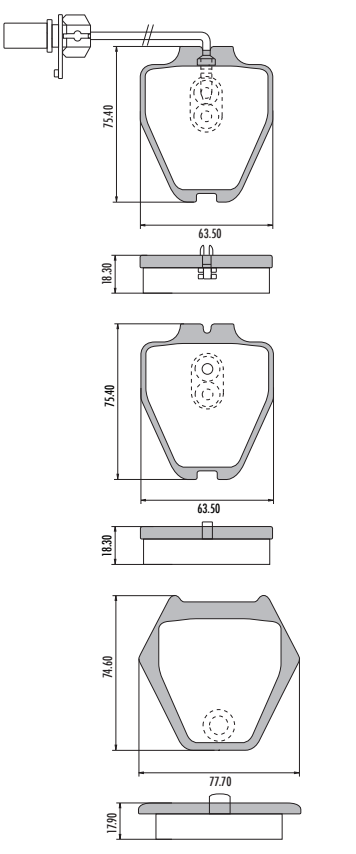

PD/657-A
WVA 21752/ 21904 — Teves System / Sistema Teves

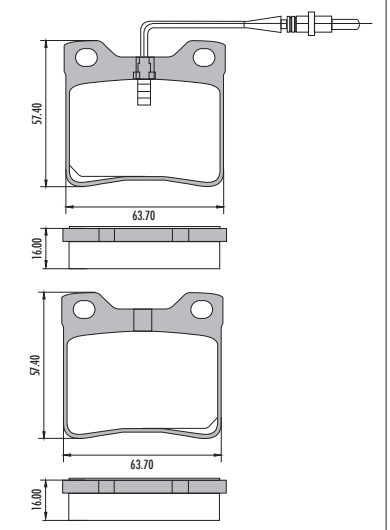

PD/425-A
WVA 21278 — Teves System / Sistema Teves

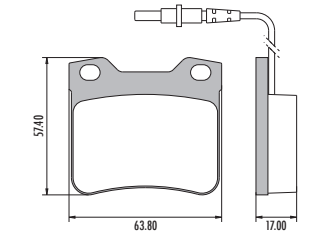

PD/1013
WVA 21898 — FMSI 7753 D876

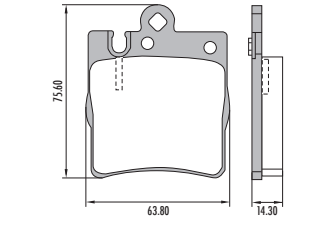

PD/468-A

WVA 20271
FMSI 7086 D157
Girling System
Sistema Girling

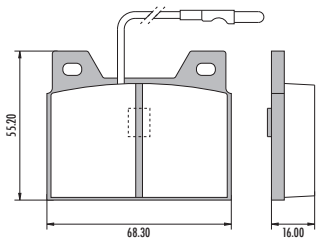

PD/1010

WVA 23078
FMSI 7724 D848

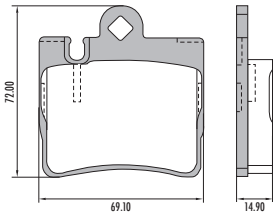

PD/651

WVA 23305
Citröen System
Sistema Citröen

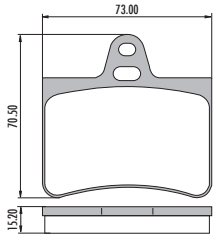

PD/1056

FMSI 7749 D874

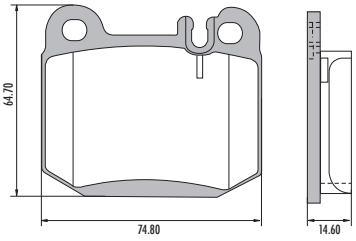

PD/1060

FMSI 7859 D961

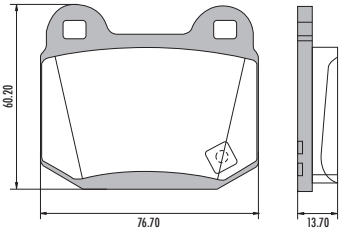

PD/43

Teves System
Sistema Teves

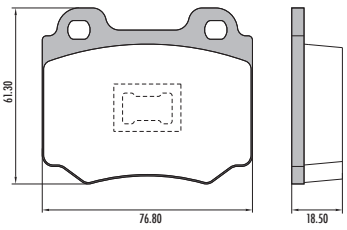

PD/11

Teves System
Sistema Teves

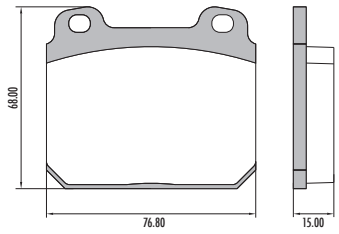

PD/1

WVA 20011
FMSI 7021 D45 - 734 D45
Teves System
Sistema Teves

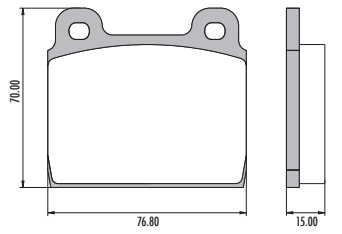

PD/13

WVA 20386
FMSI 7021 D45 - 7273 D384
Teves System
Sistema Teves

SHIM/ANTIRRUIDO

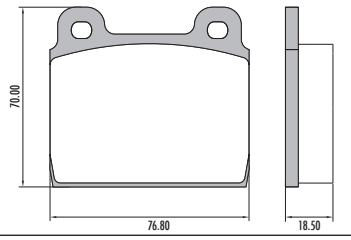

PD/307

WVA 20323
FMSI 7043 D109
Bendix System
Sistema Bendix

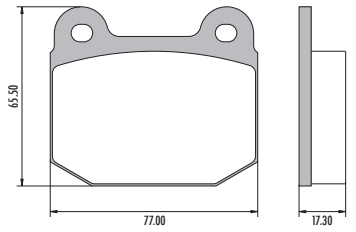

PD/629

WVA 23656
FMSI 7955 D1051
Sumitomo System
Sistema Sumitomo

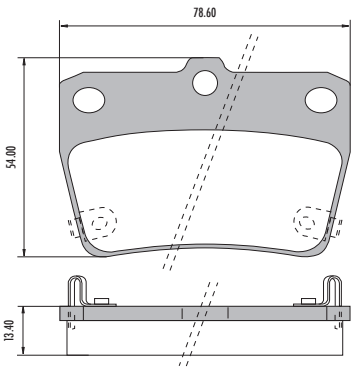

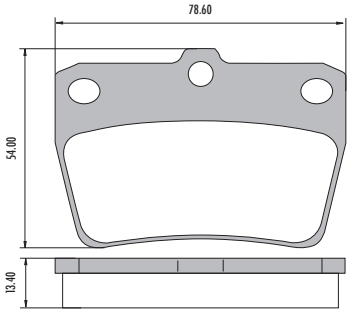

PD/616

WVA 23593
FMSI 7602 D733
Sumitomo System
Sistema Sumitomo

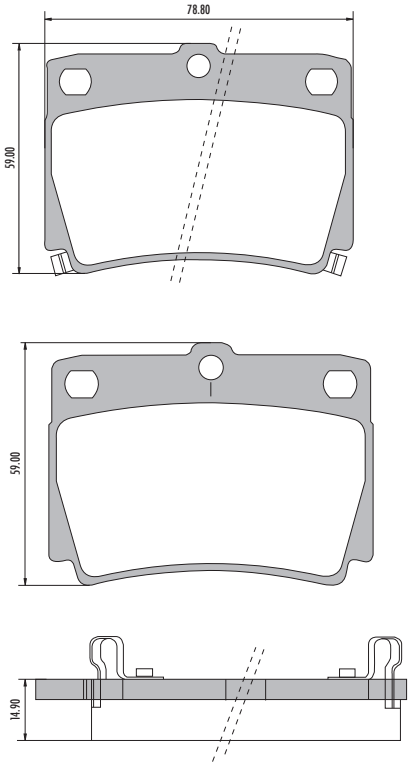

PD/7

WVA 20030
FMSI 719 D2
Varga System
Sistema Varga

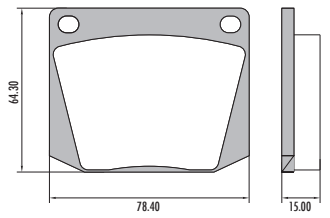

PD/311-A

WVA 20145
FMSI 7010 D77
Girling System
Sistema Girling

SHIM/ANTIRRUIDO

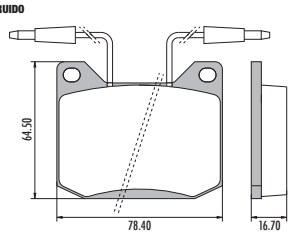

PD/330
WVA 20780 | Akebono System / Sistema Akebono

SHIM/ANTIRRUIDO

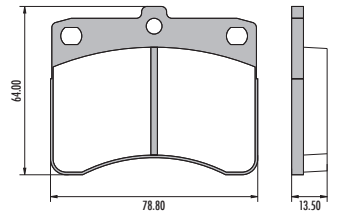

PD/313
WVA 20007 | FMSI 721 D9 | Girling System / Sistema Girling

SHIM/ANTIRRUIDO

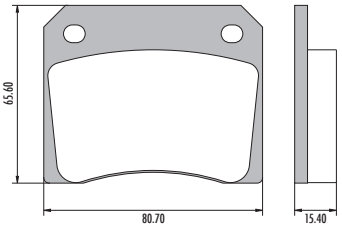

PD/596
WVA 21545 | FMSI 8305 D1187 | Girling System / Sistema Girling

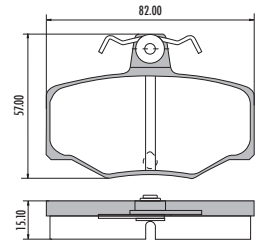

PD/31
WVA 20166 | Bendix System / Sistema Bendix

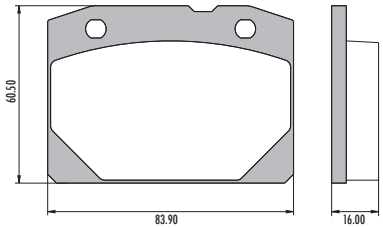

PD/1372

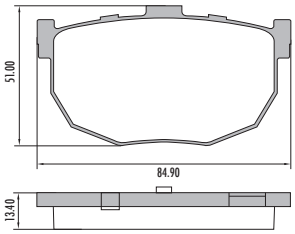

PD/666
WVA 21553 | FMSI 7344 D464

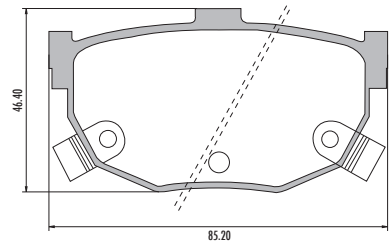

PD/684
FMSI 7146 D429

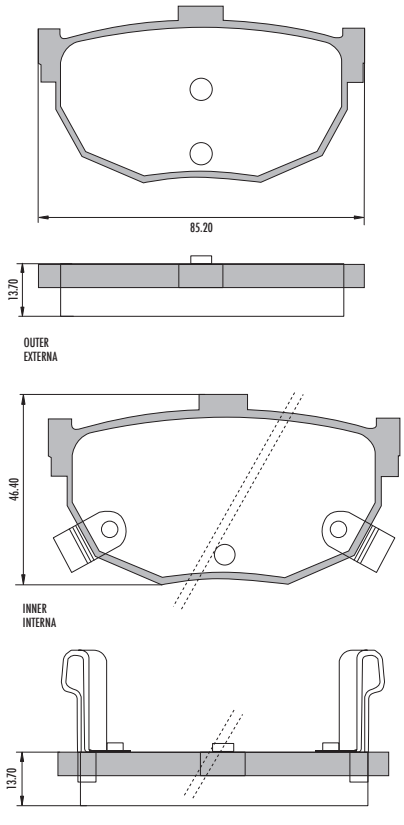

PD/401
WVA 21043 | FMSI 7180 D277 | Akebono System / Sistema Akebono

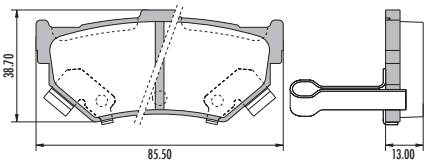

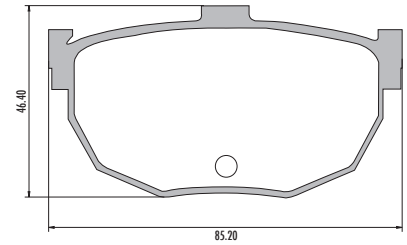

PD/480
WVA 23353 | FMSI 7763 D886 | Girling System / Sistema Girling

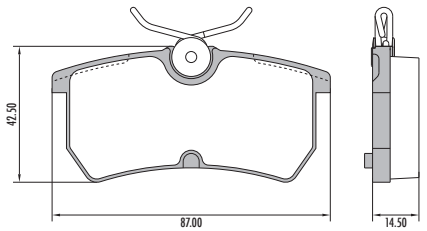

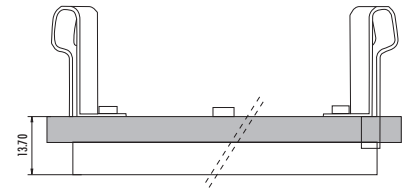

PD/430
WVA 21103 | Girling System / Sistema Girling

SHIM/ANTIRRUIDO

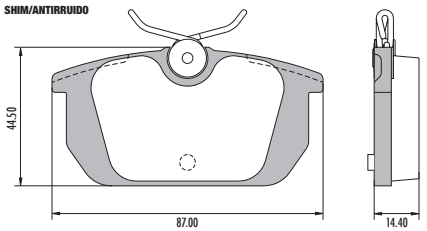

PD/1054
WVA 21861 | FMSI 7713 D838

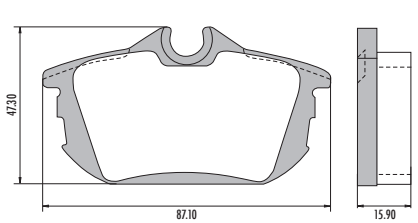

PD/362
WVA 20961 | FMSI 7234 D340 | Girling System / Sistema Girling

SHIM/ANTIRRUIDO

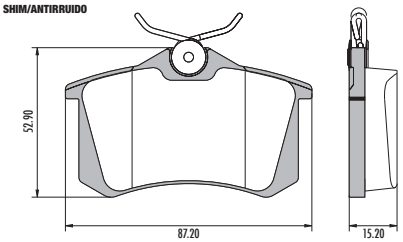

PD/59
WVA 20961 | FMSI 7335 D340 | Girling System / Sistema Girling

SHIM/ANTIRRUIDO

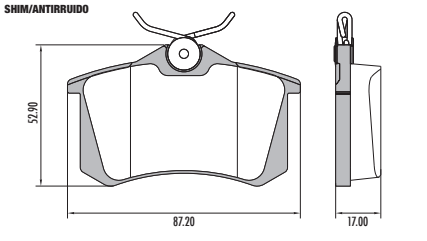

PD/49
WVA 20668 | FMSI 7144 D228 | Varga System / Sistema Varga

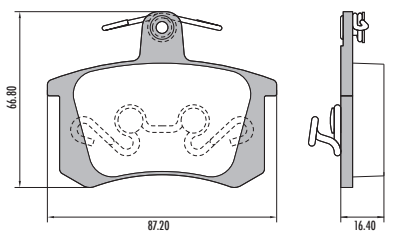

PD/334

WVA 21144
FMSI 7144 D228
Girling System
Sistema Girling

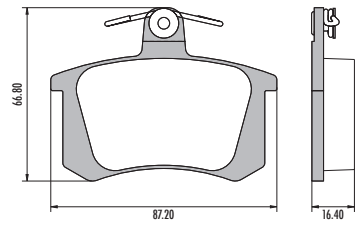

PD/439

WVA 23177
Girling System
Sistema Girling

SHIM/ANTIRRUIDO

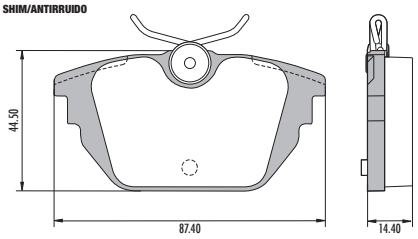

PD/416

WVA 23471
Lockheed System
Sistema Lockheed

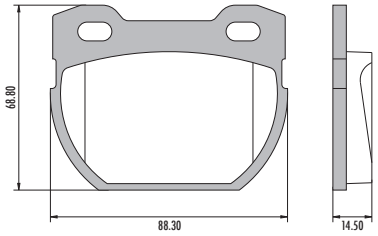

PD/464-B

WVA 21237
FMSI 7398 D518
Lockheed System
Sistema Lockheed

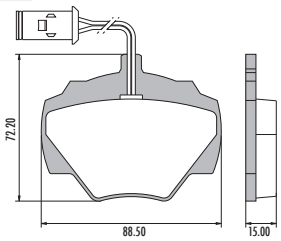

PD/457

WVA 21312 / 21313 / 21314
FMSI 7233 D374
Akebono System
Sistema Akebono

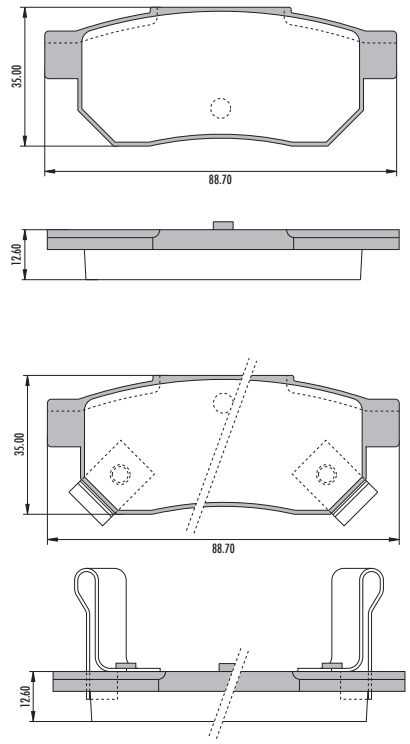

PD/554

WVA 21721
FMSI 7418 D537
Akebono System
Sistema Akebono

SHIM/ANTIRRUIDO

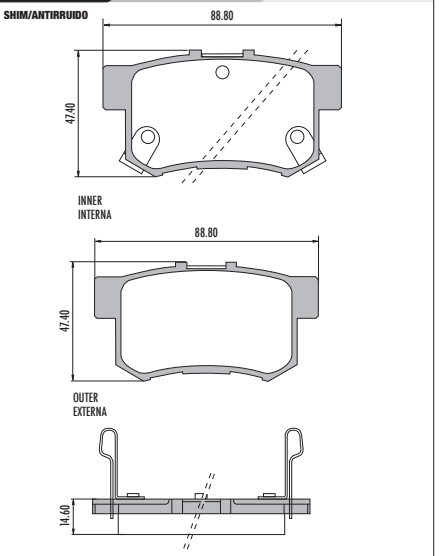

PD/645

WVA 24231 / 24232 / 24233
FMSI 7418 D1086
Akebono System
Sistema Akebono

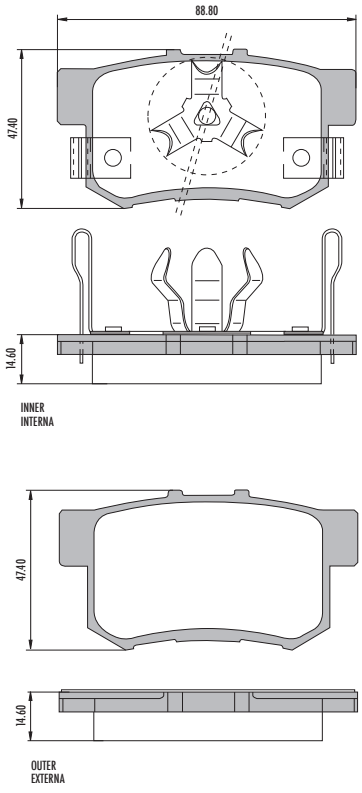

PD/690

FMSI 7418 D536

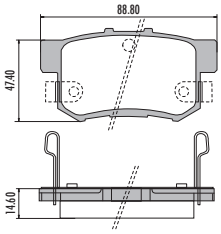

PD/444

WVA 21719
FMSI 7256 D365

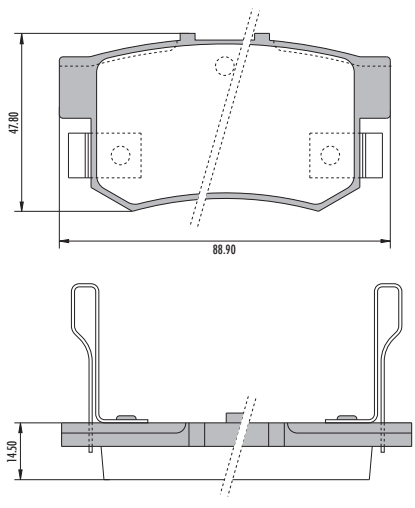

PD/361-A

WVA 20455
FMSI 7073 D455
Teves System
Sistema Teves

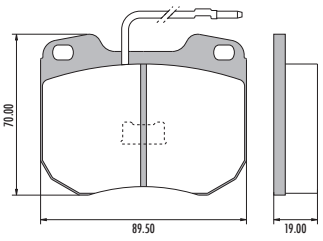

PD/398

WVA 21738
FMSI 7443 D564
Akebono System
Sistema Akebono

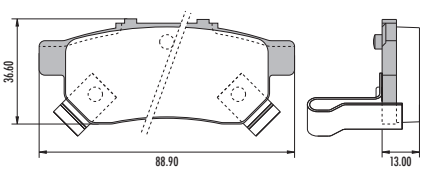

PD/451

WVA 21605 / 21606
Girling System
Sistema Girling

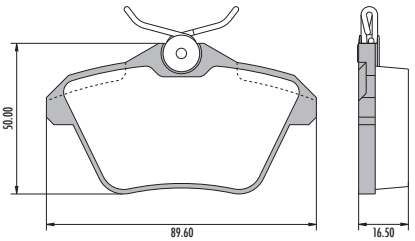

PD/18
WVA 20375 — Teves System / Sistema Teves

SHIM/ANTIRRUIDO

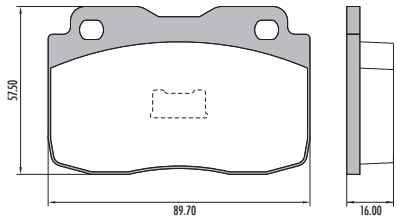

PD/698
FMSI 7504 D627

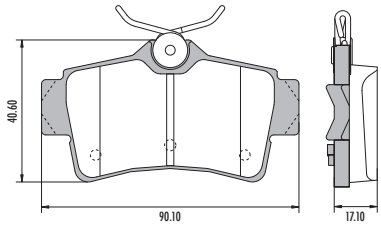

PD/632
WVA 23582
FMSI 7743 D868 — Sumitomo System / Sistema Sumitomo

SHIM/ANTIRRUIDO

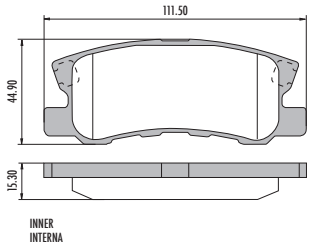

INNER
INTERNA

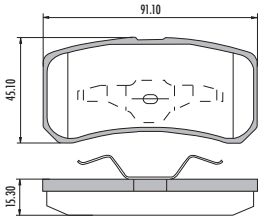

OUTER
EXTERNA

PD/363-A
WVA 21080 — Girling System / Sistema Girling

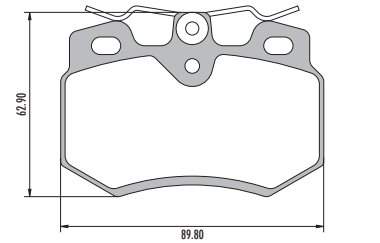

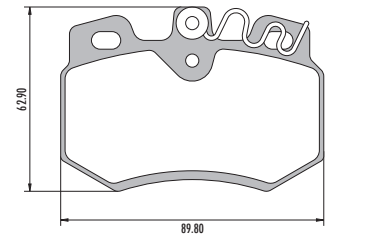

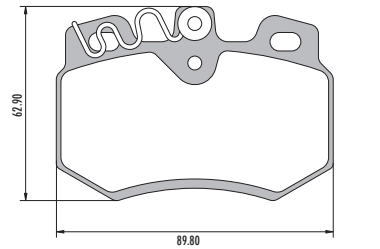

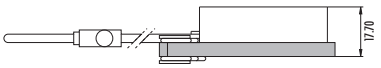

PD/376
WVA 21654
FMSI 7219 D466 — Sumitomo System / Sistema Sumitomo

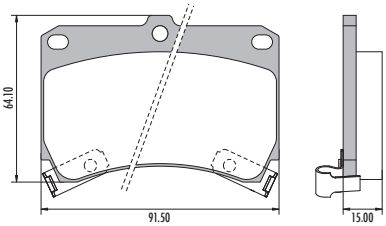

PD/132
WVA 21539
FMSI 7353 D473 — Sumitomo System / Sistema Sumitomo

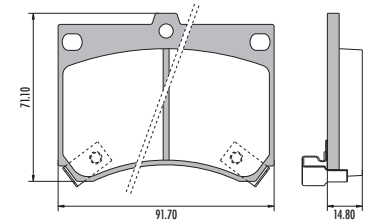

PD/739
FMSI 7786 D885

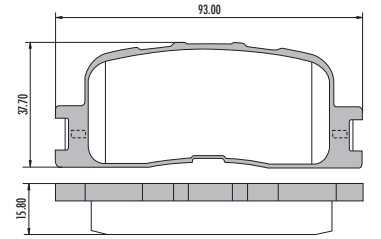

PD/1093
WVA 24320 / 24321 / 24322
FMSI 8267 D1157 — Mando System / Sistema Mando

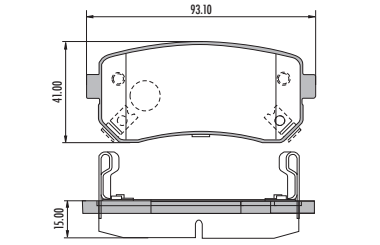

INNER
INTERNA

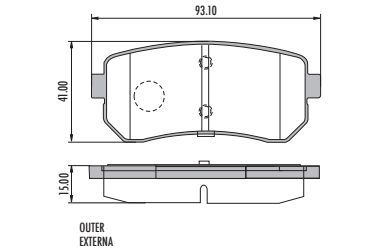

OUTER
EXTERNA

PD/699
FMSI 7524 D627

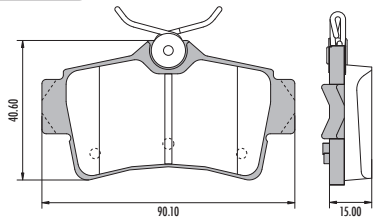

PD/1355
FMSI 8370 D1252

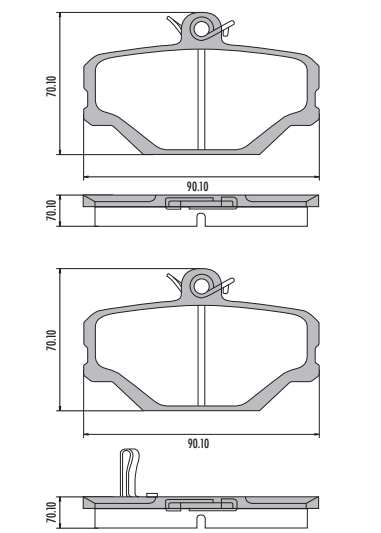

PD/487
WVA 21634 / 21635
FMSI 7461 D581 — Girling System / Sistema Girling

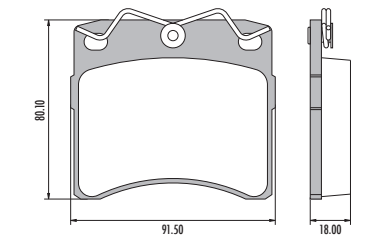

PD/1334
FMSI 8506 D1398 — Mando System / Sistema Mando

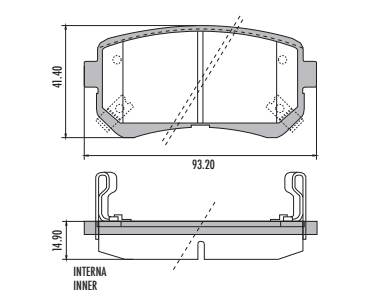

INTERNA
INNER

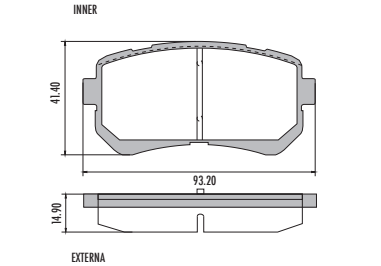

EXTERNA
OUTER

PD/1088
FMSI 8447 D1336

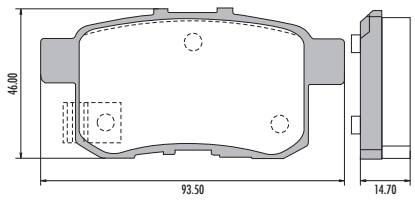

PD/696
FMSI 7489 D610

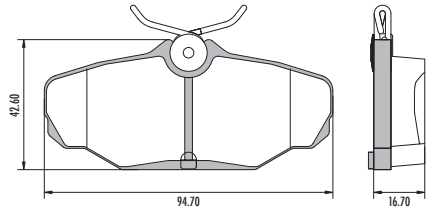

PD/1045
FMSI 7601 D493

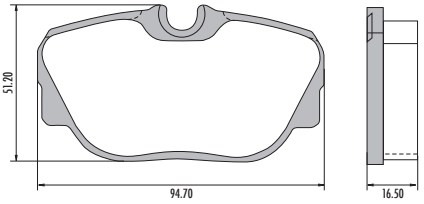

PD/1335
WVA 24150
FMSI 8833 D1621
Bosch System
Sistema Bosch

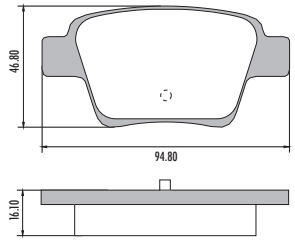

PD/50
FMSI 8329 D1209
Varga System
Sistema Varga

SHIM/ANTIRRUIDO

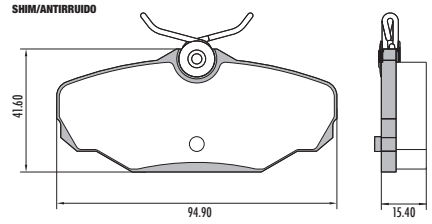

PD/518
WVA 23714
Bosch System
Sistema Bosch

SHIM/ANTIRRUIDO

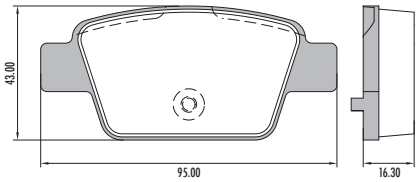

PD/326-A
WVA 21209 / 21210
FMSI 7334 D454
Girling System
Sistema Girling

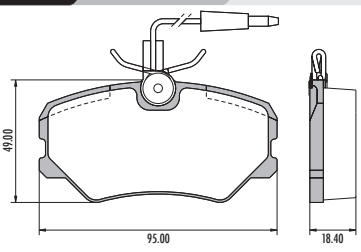

PD/407
WVA 21882
FMSI 7580 D706
Girling System
Sistema Girling

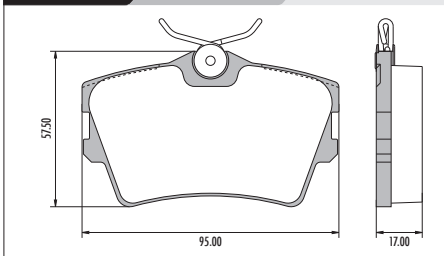

PD/1332
FMSI 8429 D1314
TRW System
Sistema TRW

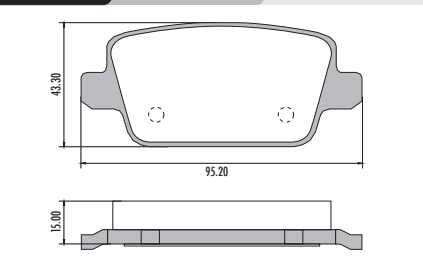

PD/1303
FMSI 8424 D1309

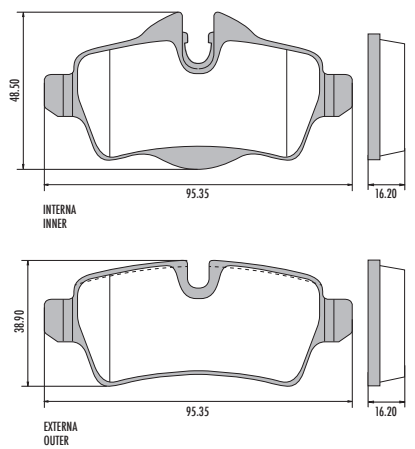

PD/1401
WVA 25478 / 25479
FMSI 8754 D1554

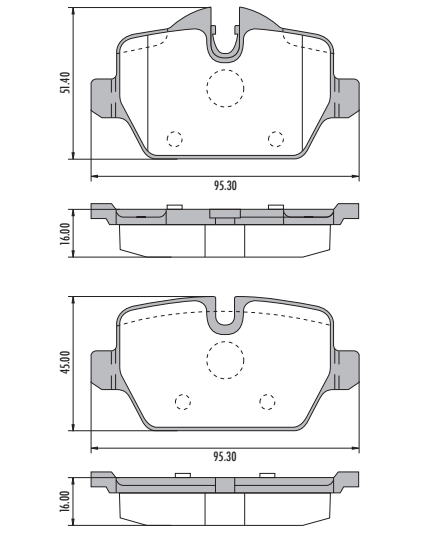

PD/1451
WVA 23263/ 23624
FMSI 8345 D1226
Lucas System
Sistema Lucas

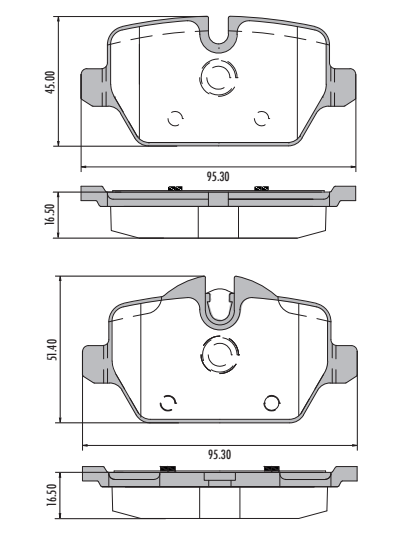

PD/1333
FMSI 8467 D1358
Lucas System
Sistema Lucas

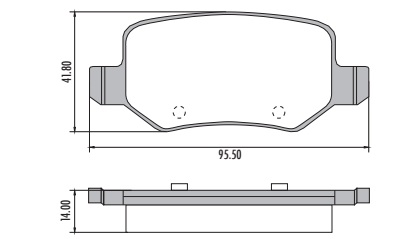

PD/600
WVA 23417

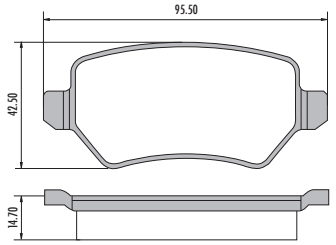

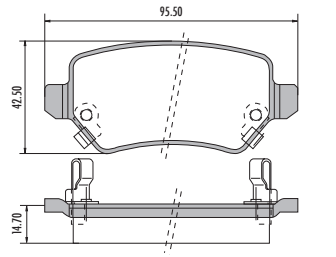

PD/400-A
WVA 20332
Girling System
Sistema Girling

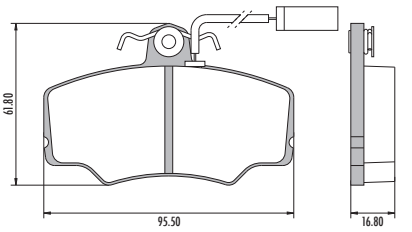

PD/1016
FMSI 7885 D983

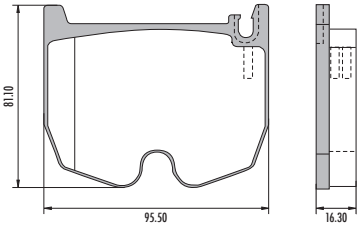

PD/1395
WVA 23284
FMSI 8742 D1533

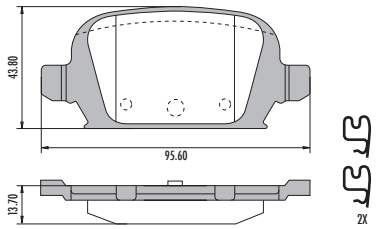

PD/1331
WVA 23601
Lucas System
Sistema Lucas

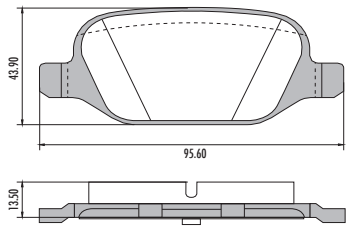

PD/512
WVA 23816
FMSI 8336 D1216
TRW System
Sistema TRW

SHIM/ANTIRRUIDO

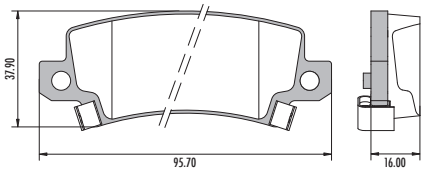

PD/1403
WVA 25410 / 25411 / 25412
FMSI 8778 D1569

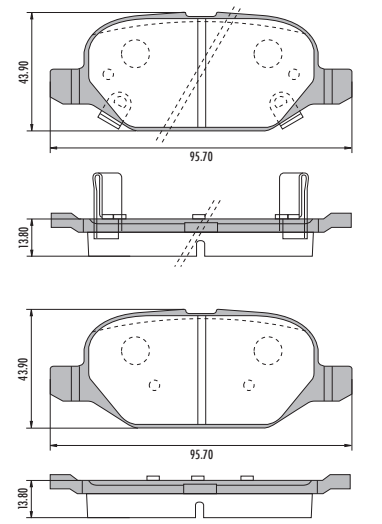

PD/1416

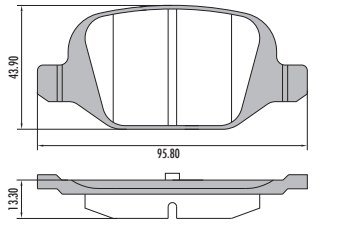

PD/8
WVA 20578
Varga System
Sistema Varga

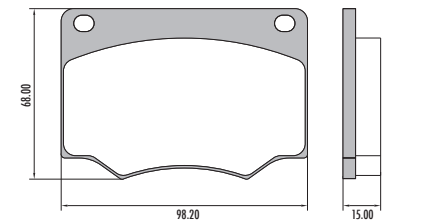

PD/753
WVA 24338
FMSI 8332 D1212
Akebono System
Sistema Akebono

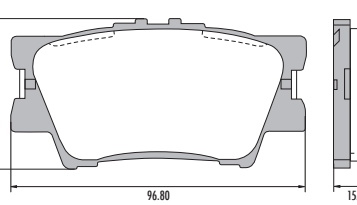

PD/9
WVA 20027
FMSI 724 D4
Varga System
Sistema Varga

SHIM/ANTIRRUIDO

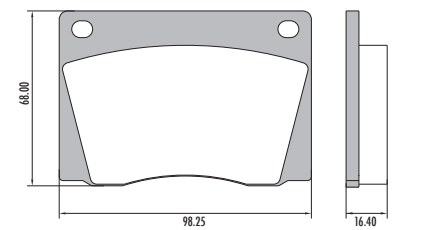

PD/1320
WVA 24610/ 24611/ 24612
FMSI 8463 D1354

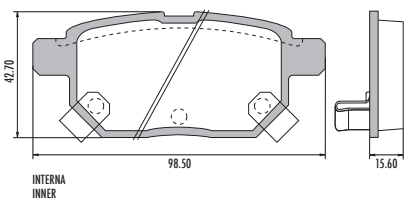

INTERNA
INNER

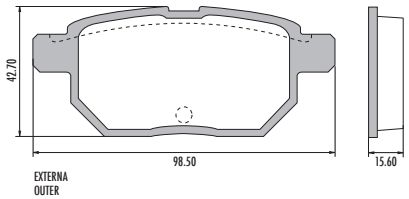

EXTERNA
OUTER

PD/1037
FMSI 7390 D511

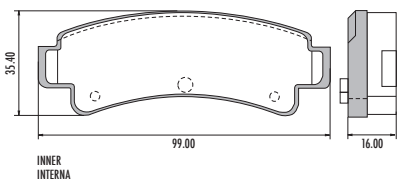

INNER
INTERNA

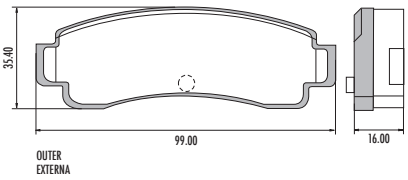

OUTER
EXTERNA

PD/306
WVA 20578
Varga System
Sistema Varga

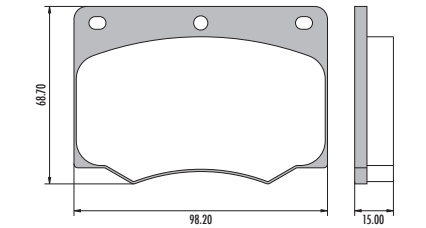

PD/725
WVA 23543
FMSI 7688 D813
Akebono System
Sistema Akebono

SHIM/ANTIRRUIDO

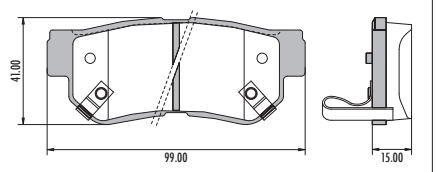

PD/730
FMSI 7701 D828

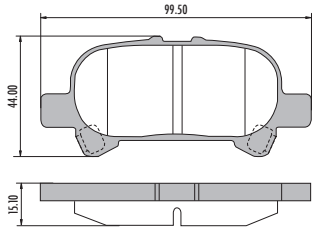

PD/304
WVA 20671
Tensa System
Sistema Tensa

SHIM/ANTIRRUIDO

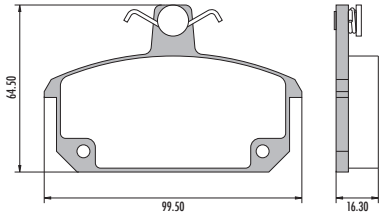

PD/1368
WVA 25337 / 25338 / 25339
FMSI 8428 D1594
Akebono System
Sistema Akebono

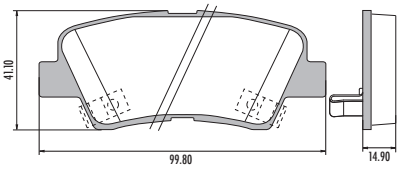

PD/1356
FMSI 8428 D1445

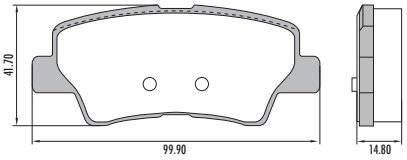

PD/1304

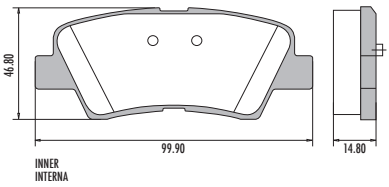

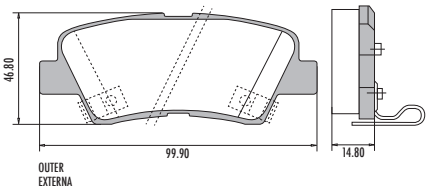

PD/424
WVA 21059
FMSI 7267 D378
Delco Moraine System
Sistema Delco Moraine

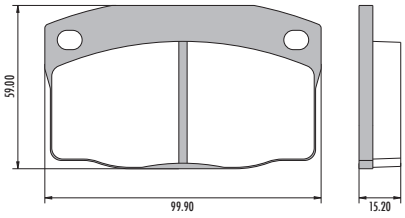

PD/1468

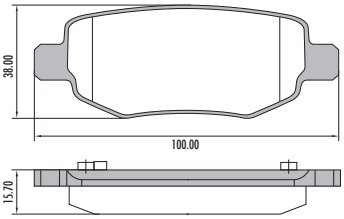

PD/431
WVA 20939
Delco Moraine System
Sistema Delco Moraine

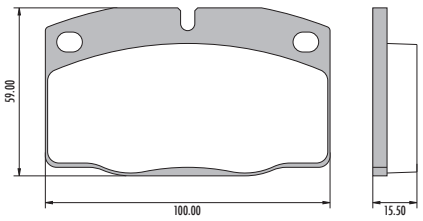

PD/305
WVA 20772

SHIM/ANTIRRUIDO

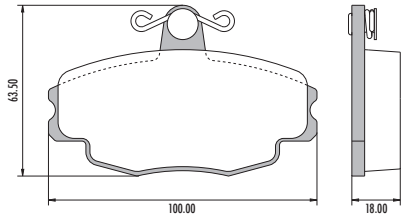

PD/305-A
WVA 20937
FMSI 7194 D292
Girling System
Sistema Girling

SHIM/ANTIRRUIDO

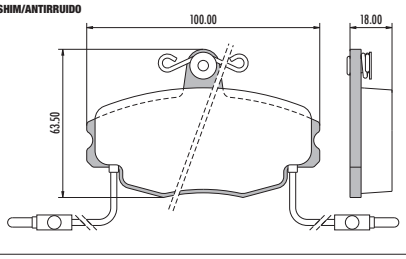

PD/338
WVA 21404
Girling System
Sistema Girling

SHIM/ANTIRRUIDO

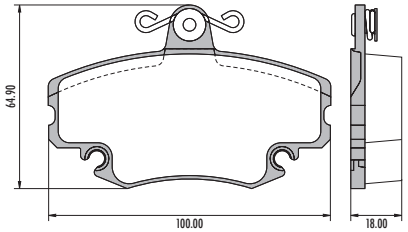

PD/338-A
WVA 21463
FMSI 8256 D1146
Girling System
Sistema Girling

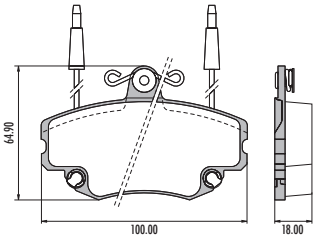

PD/521-E
WVA 21460
Girling System
Sistema Girling

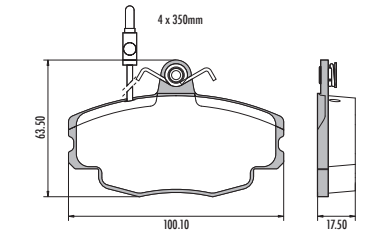

PD/806
FMSI 7963 D1057

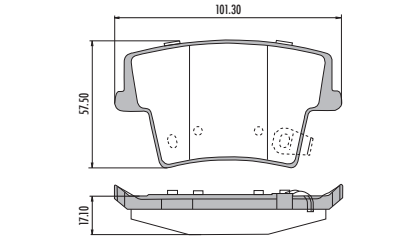

PD/344
WVA 20008
FMSI 7257 D366
Akebono System
Sistema Akebono

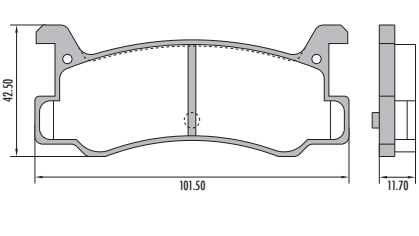

PD/317
WVA 20172
Tensa System
Sistema Tensa

SHIM/ANTIRRUIDO

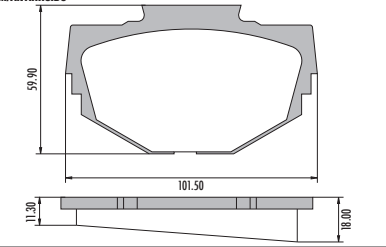

PD/762
FMSI 7897 D996

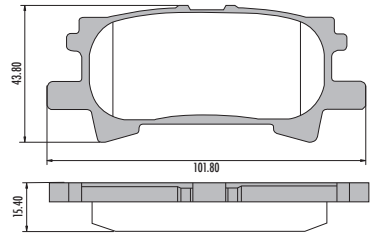

PD/1396
WVA 24349
FMSI 8746 D1537

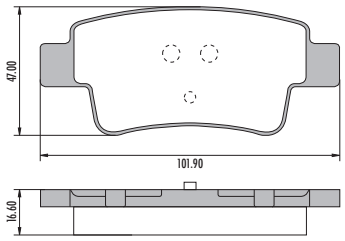

PD/1095-A
WVA 24008
FMSI 8828 D1615

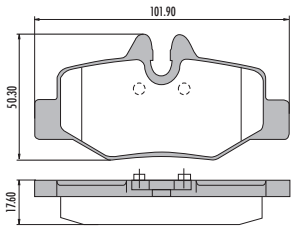

PD/768
WVA 24260
FMSI 7976 D1071

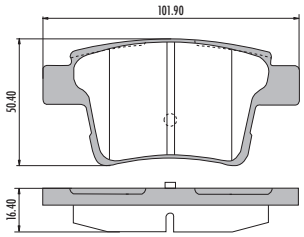

PD/1021
FMSI 7975 D1070

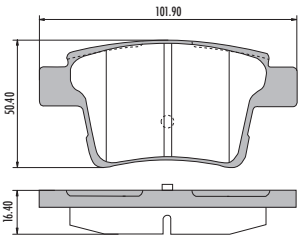

PD/1022
WVA 23945
FMSI 8227 D1121

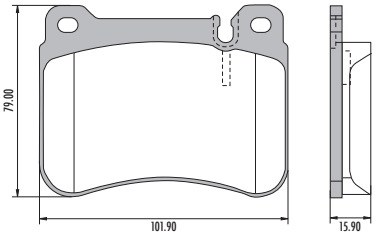

PD/1041
FMSI 7514 D636

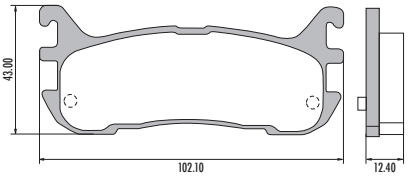

PD/558
FMSI 7514 D663

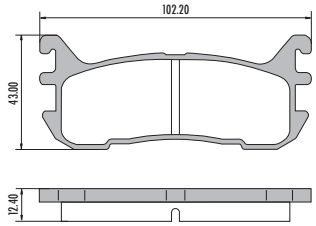

PD/1338
WVA 24540
Bosch System
Sistema Bosch

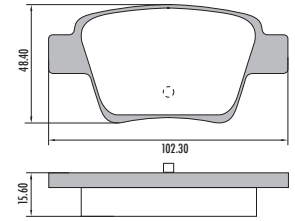

PD/455
WVA 21338
FMSI 7336 D456
Sumitomo System
Sistema Sumitomo

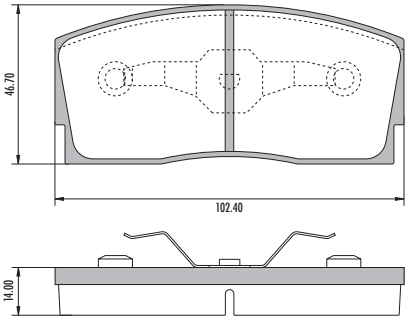

OUTER
EXTERNA

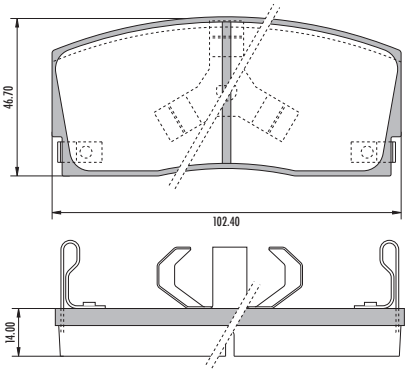

INNER
INTERNA

PD/689
FMSI 8781 D1572
Bosch System
Sistema Bosch

SHIM/ANTIRRUIDO

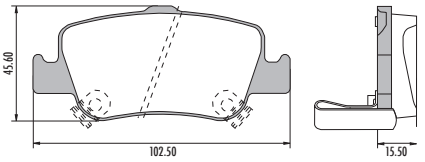

PD/1392
FMSI 8721 D1512

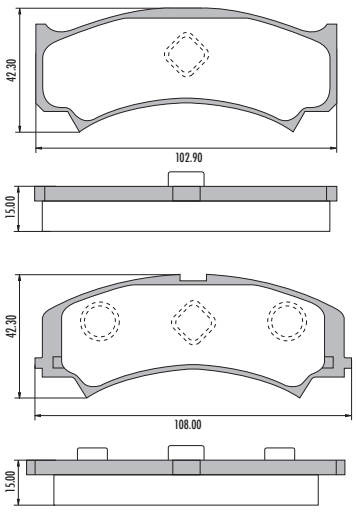

PD/1391
FMSI 8720 D1511

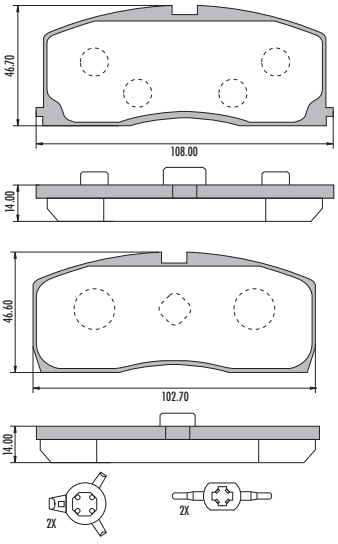

PD/378
WVA 21500
FMSI 7305 D418
Akebono System
Sistema Akebono

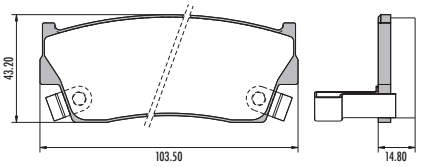

PD/1445
WVA 24922

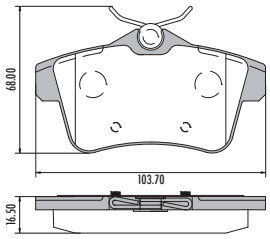

PD/27-A
Girling System
Sistema Girling

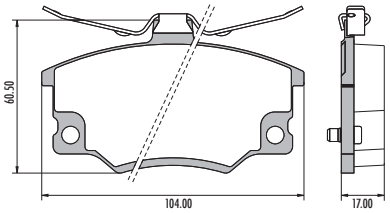

PD/335-A
WVA 20833
FMSI D147
Girling System
Sistema Girling

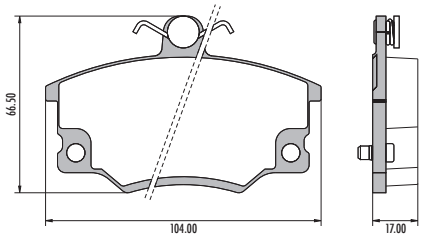

PD/54
FMSI 8284 D1173
Varga System
Sistema Varga

SHIM/ANTIRRUIDO

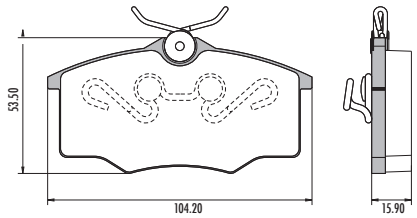

PD/22
Varga System
Sistema Varga

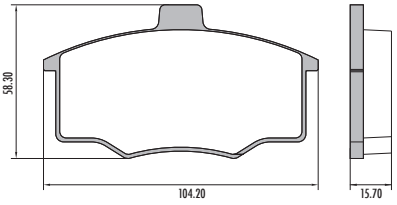

PD/26
Varga System
Sistema Varga

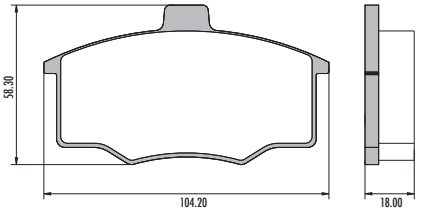

PD/26-A
Varga System
Sistema Varga

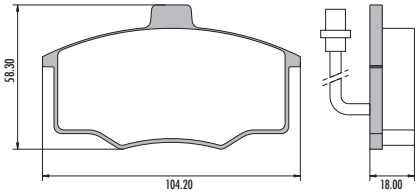

PD/681
WVA 24071
FMSI 7939 D1036
Sumitomo System
Sistema Sumitomo

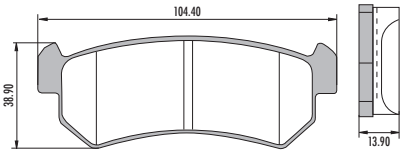

PD/477
WVA 23052
Bosch System
Sistema Bosch

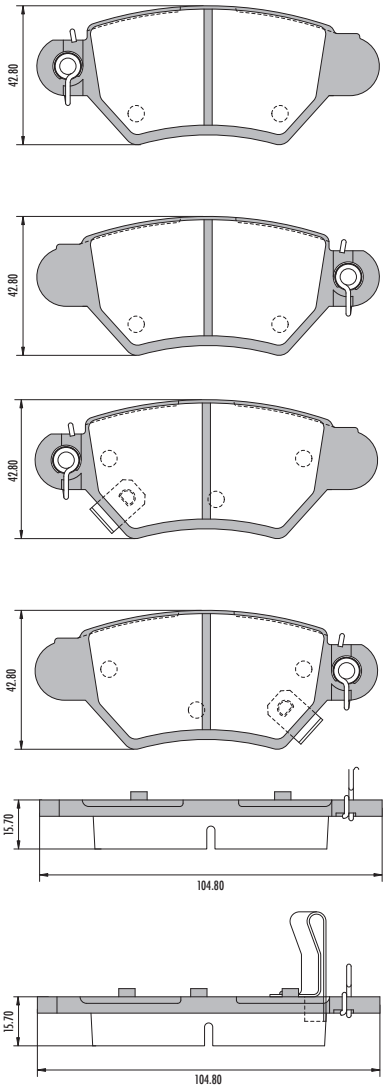

PD/1420
WVA 25540 / 25541
FMSI 8837 D1624

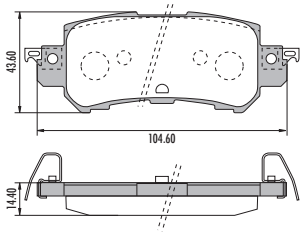

PD/604
WVA 23258
Bosch System
Sistema Bosch

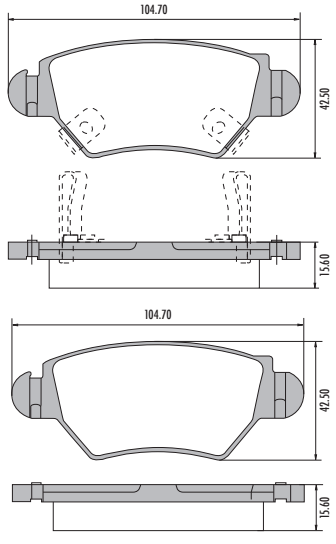

PD/478
WVA 23238 / 23239 / 23240
FMSI 8258 D1148
Akebono System
Sistema Akebono

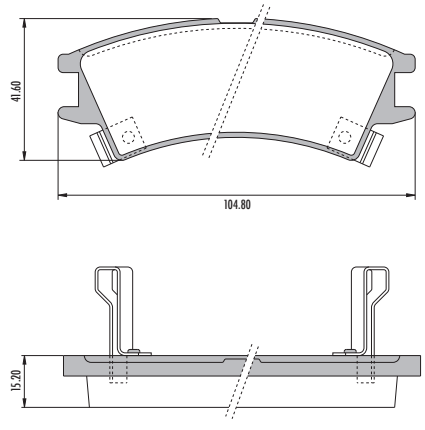

PD/1380
WVA 23258 / 23259 / 23262 / 23263
FMSI 8661 D1461

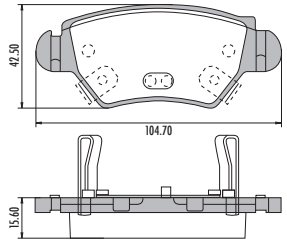

PD/535
WVA 24277
FMSI 8253 D1142
Mando System
Sistema Mando

SHIM/ANTIRRUIDO

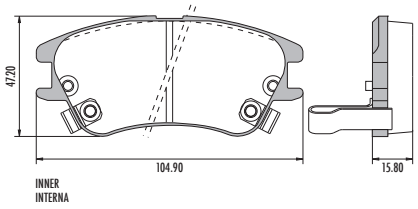

INNER
INTERNA

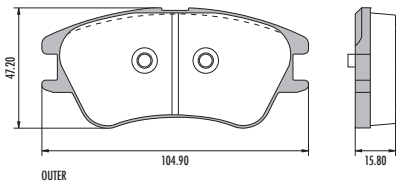

OUTER
EXTERNA

PD/458-B
WVA 21897
FMSI 7401 D520
Lockheed System
Sistema Lockheed

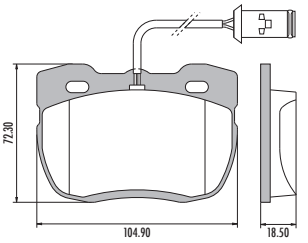

PD/327
WVA 21096
FMSI 7394 D516
Bendix System
Sistema Bendix

SHIM/ANTIRRUIDO

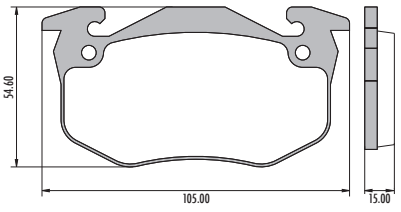

PD/465
WVA 20973 / 20974
Bendix System
Sistema Bendix

SHIM/ANTIRRUIDO

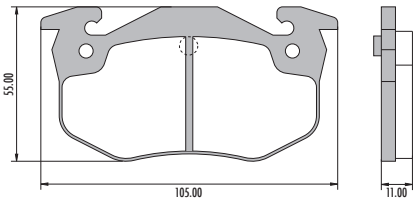

PD/312-A
WVA 20632
FMSI 7116 D193
Bendix System
Sistema Bendix

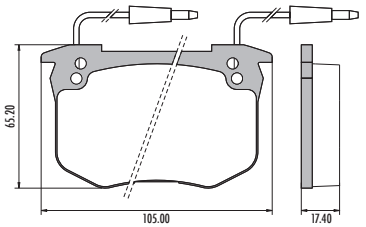

PD/322-A
WVA 20905
FMSI 7261 D371
Bendix System
Sistema Bendix

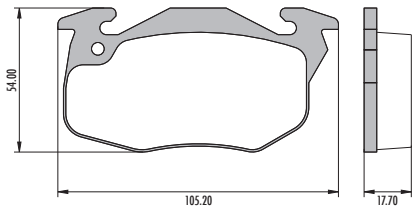

LEFT
IZQUIERDO

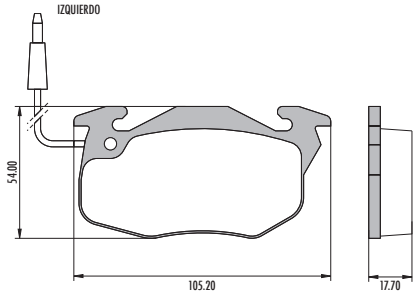

LEFT
IZQUIERDO

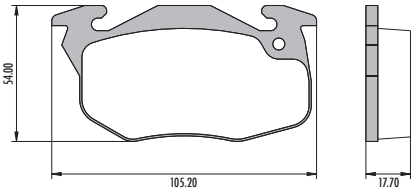

RIGHT
DERECHO

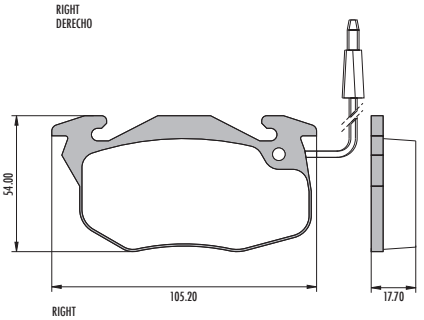

RIGHT
DERECHO

PD/322
SHIM/ANTIRRUIDO

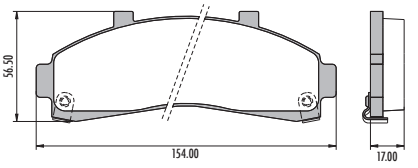

PD/1456
WVA 24483
FMSI 8213 D1348

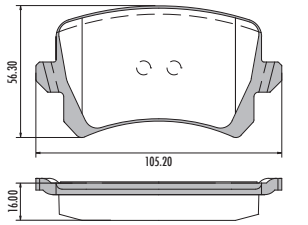

PD/1030
WVA 23914
FMSI 8213 D1108
Lucas System
Sistema Lucas

SHIM/ANTIRRUIDO

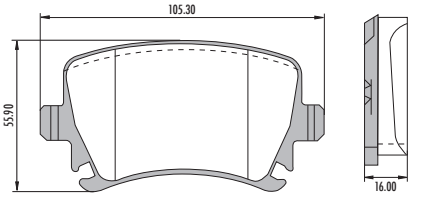

PD/1025
FMSI 8405 D1288

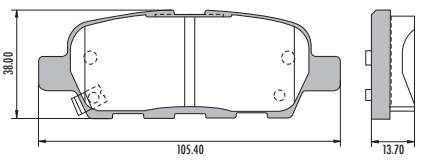

PD/522-E
WVA 20906
Bendix System
Sistema Bendix

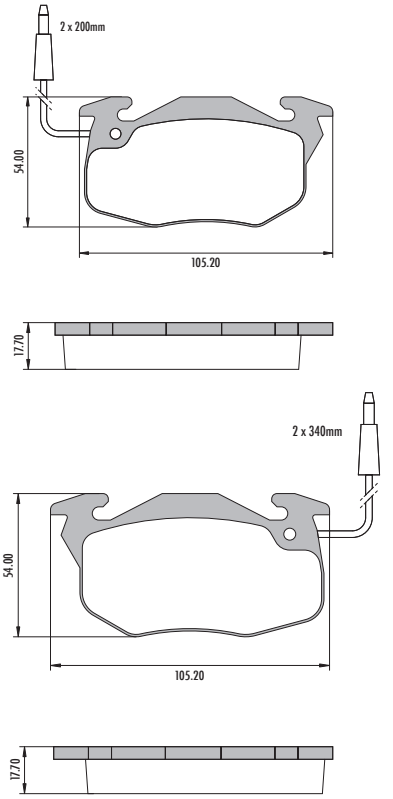

PD/741
FMSI 7777 D900

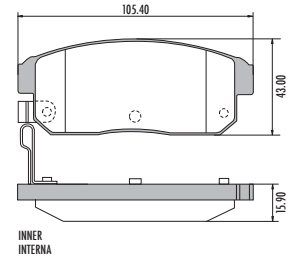

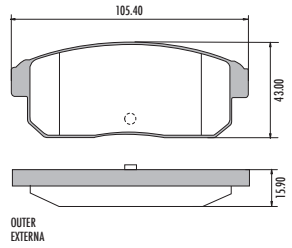

PD/692
FMSI 7533 D540
Sumitomo System
Sistema Sumitomo

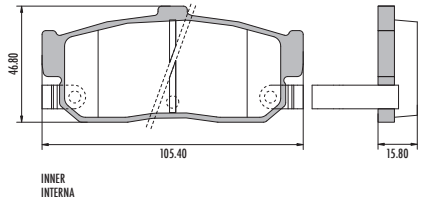

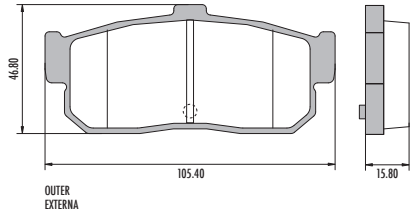

PD/691
WVA 21713
FMSI 7421 D540

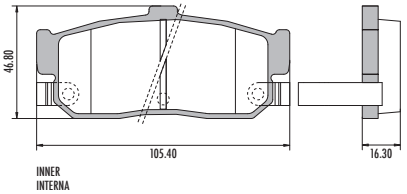

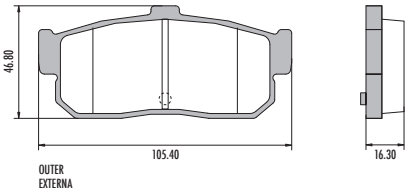

PD/585
WVA 23814 / 23871 / 23872
FMSI 7784 D905

SHIM/ANTIRRUIDO

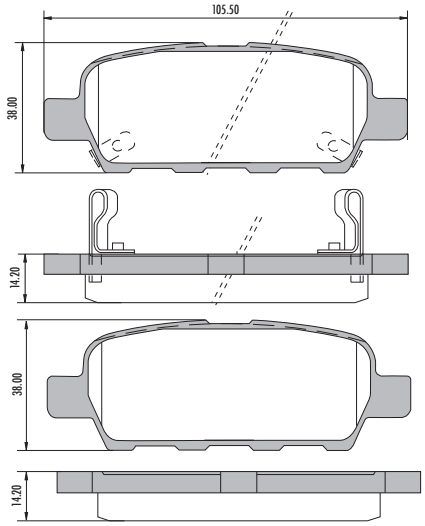

PD/303-A
FMSI 7123 D201
Bendix System
Sistema Bendix

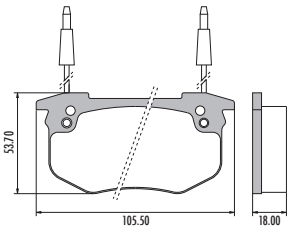

PD/723
WVA 24014 / 24015
FMSI 7940 D1037

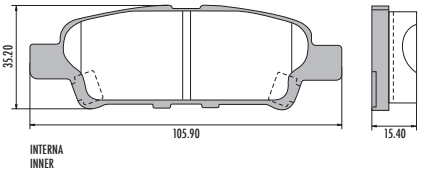

PD/703
FMSI 7553 D672

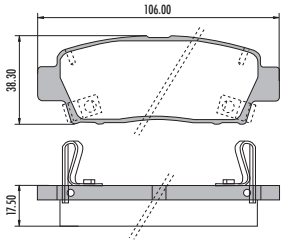

PD/1446
WVA 24820
Bosch System
Sistema Bosch

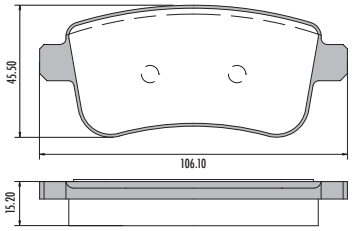

PD/1453
WVA 24496
FMSI 8422 D1307

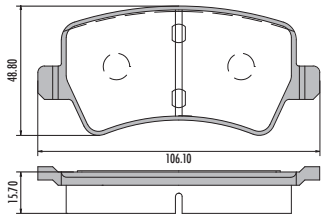

PD/1466
WVA 24561/ 24562
FMSI 8672 D1473
Girling System
Sistema Girling

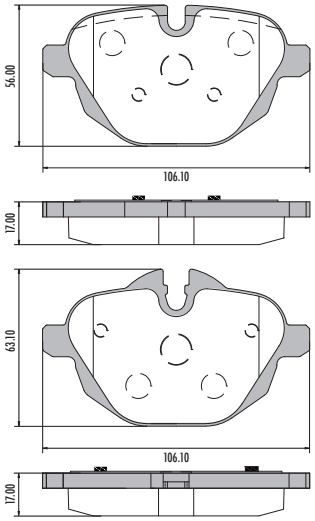

PD/1330
WVA 23662

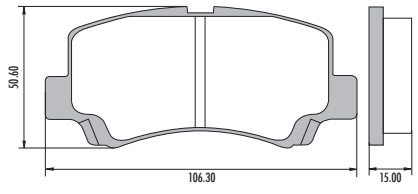

PD/379
WVA 21333
FMSI 7331 D451
Akebono System
Sistema Akebono

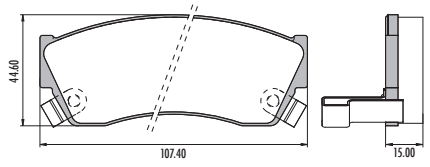

PD/682
FMSI 7223 D325

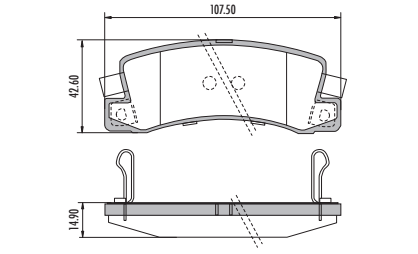

PD/683
FMSI 7272 D383

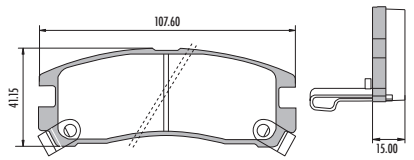

PD/1048
FMSI 7622 D754

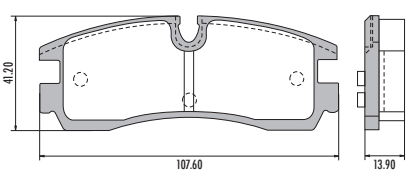

PD/778
WVA 21703
FMSI 7351 D471

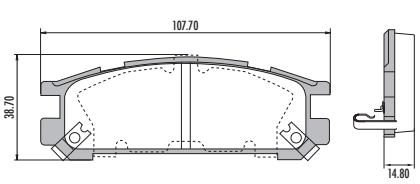

PD/1131
WVA 20031
FMSI 7186 D332

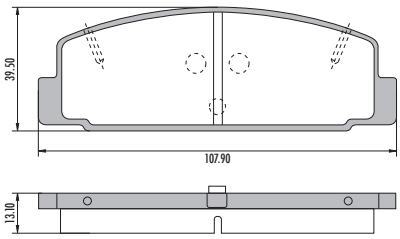

PD/677
FMSI 7387 D698

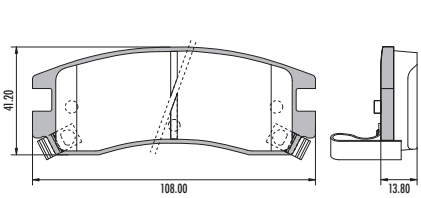

PD/688
FMSI 7387 D508

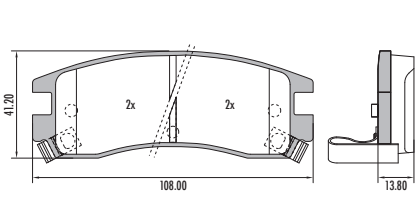

PD/709
FMSI 7387 D714

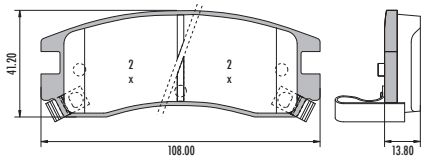

PD/450
WVA 21840
FMSI 7447 D567
Akebono System
Sistema Akebono

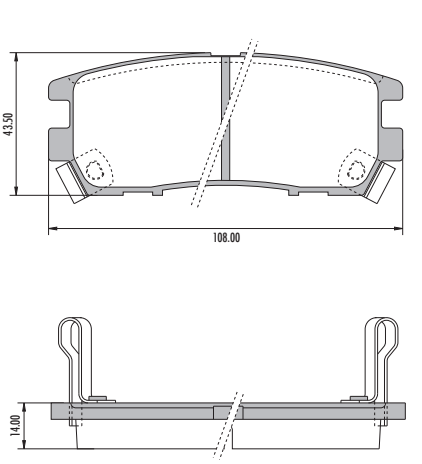

PD/1373
WVA 23962/ 23963/ 25181

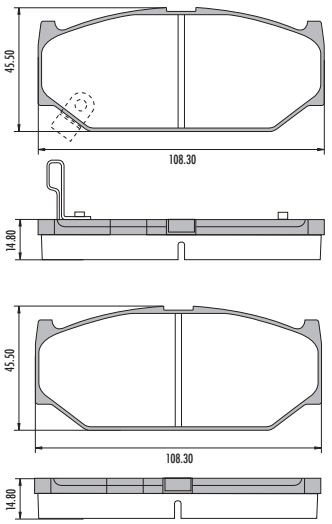

PD/619
WVA 23572
FMSI 7637 D770
Akebono System
Sistema Akebono

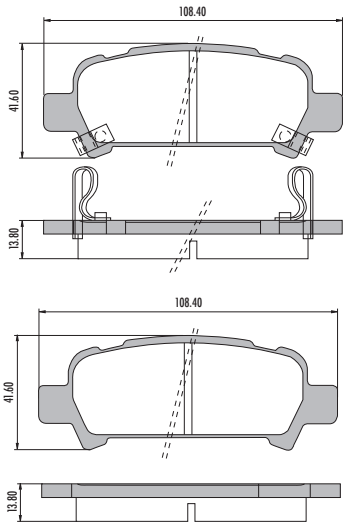

PD/421
WVA 23061
Sumitomo System
Sistema Sumitomo

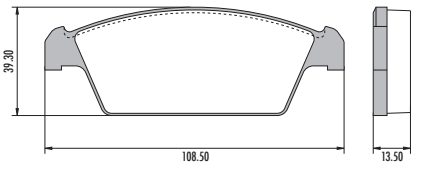

PD/544
WVA 20449
FMSI 7155 D275
Sumitomo System
Sistema Sumitomo

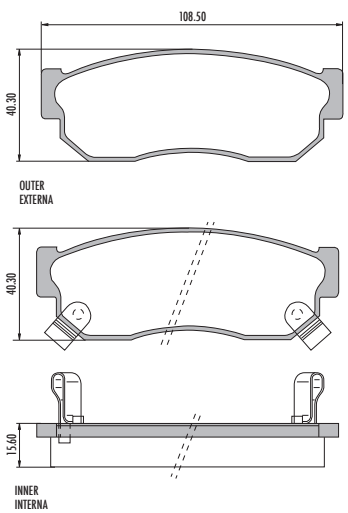

PD/75
WVA 20958
FMSI 7155 D233 - 7251 D233
Sumitomo System
Sistema Sumitomo

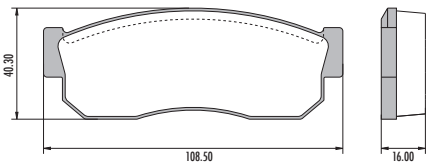

PD/393
WVA 23004 / 23005 — Sumitomo System / Sistema Sumitomo

SHIM/ANTIRRUIDO

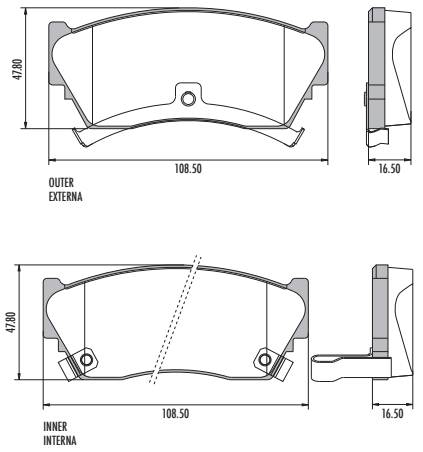

PD/532
WVA 21657 / FMSI 7389 D510 — Sumitomo System / Sistema Sumitomo

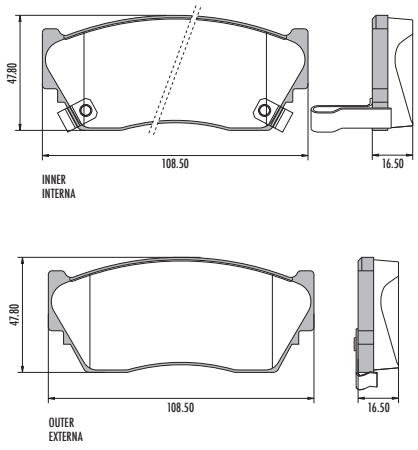

PD/660
FMSI 7389 D510

SHIM/ANTIRRUIDO

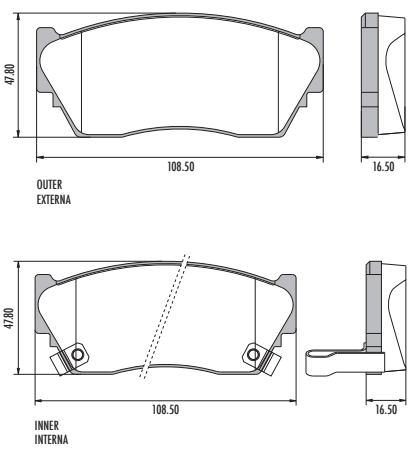

PD/1005
FMSI 7546 D668

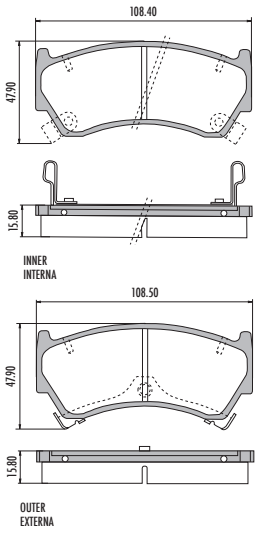

PD/1039
FMSI 7468 D588

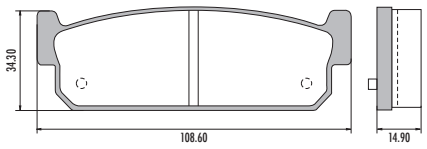

PD/301
WVA 20347 / FMSI 793 D49 — Bendix System / Sistema Bendix

SHIM/ANTIRRUIDO

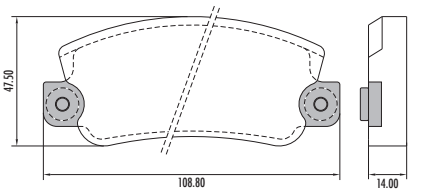

PD/301-A
Bendix System / Sistema Bendix

SHIM/ANTIRRUIDO

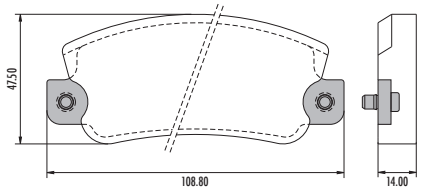

PD/310
WVA 21131 — Bendix System / Sistema Bendix

SHIM/ANTIRRUIDO

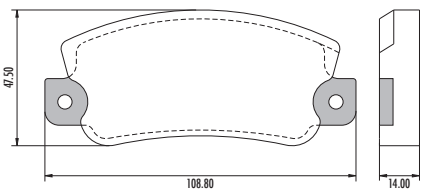

PD/320
Wabco Perrot System / Sistema Wabco Perrot

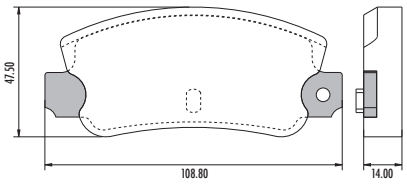

PD/309
WVA 20775 / 20776 / 20777 — Bendix System / Sistema Bendix

SHIM/ANTIRRUIDO

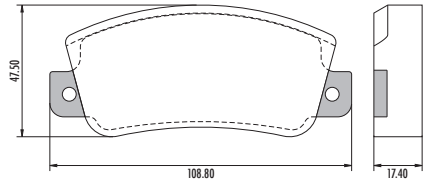

PD/10
WVA 20247 — Bendix System / Sistema Bendix

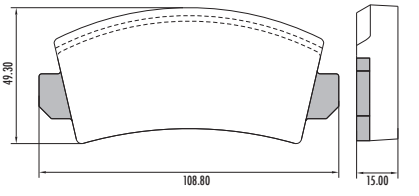

PD/302
Tensa System / Sistema Tensa

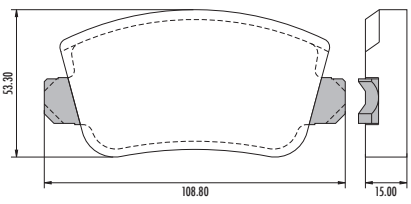

PD/319
WVA 20074 / FMSI 7001 D71 — Bendix System / Sistema Bendix

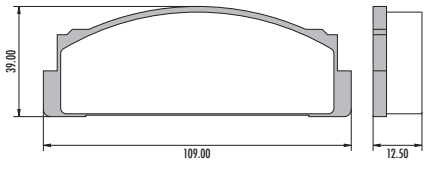

PD/308
WVA 20073 / FMSI 798 D54 — Bendix System / Sistema Bendix

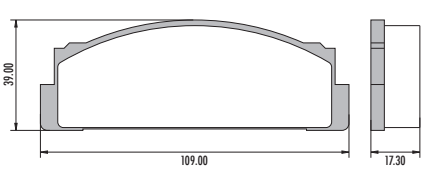

PD/798
FMSI 7900 D999

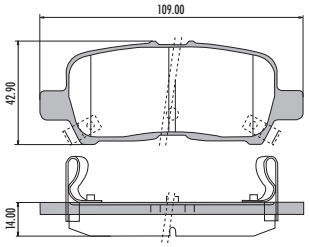

PD/735
FMSI 7740 D865

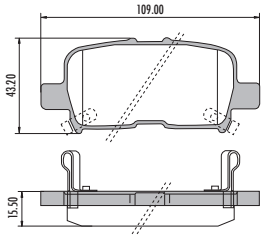

PD/1465
WVA 24563
FMSI 8656 D1456

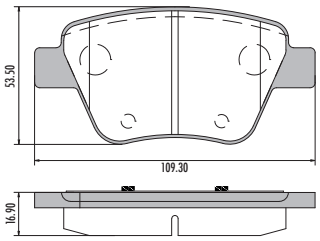

PD/447
WVA 21730
FMSI 7450 D570
Akebono System
Sistema Akebono

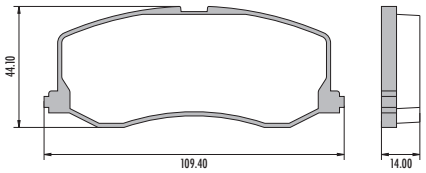

PD/693
FMSI 7460 D580

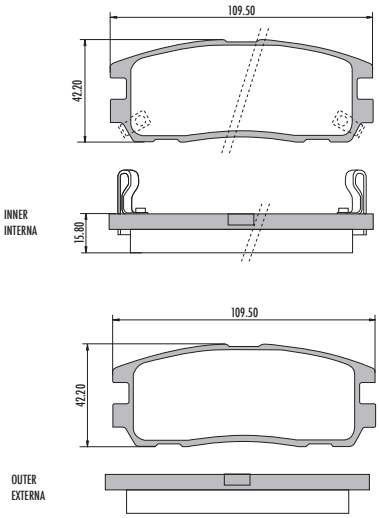

PD/501
WVA 23921
Brembo System
Sistema Brembo

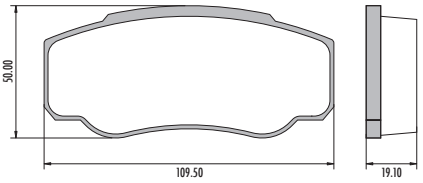

PD/151-A
WVA 29140
Brembo System
Sistema Brembo

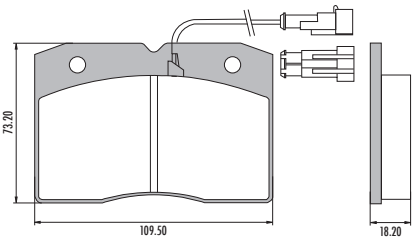

PD/489
WVA 21439
FMSI 7523 D645
Teves System
Sistema Teves

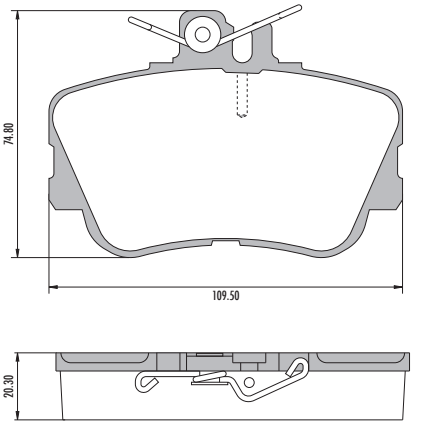

PD/163
WVA 29123
Brembo System
Sistema Brembo

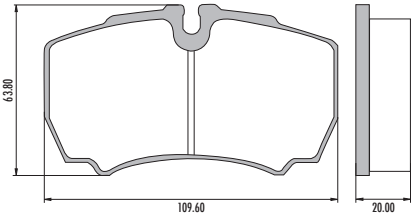

PD/1481
WVA 25365/ 25366/ 25367

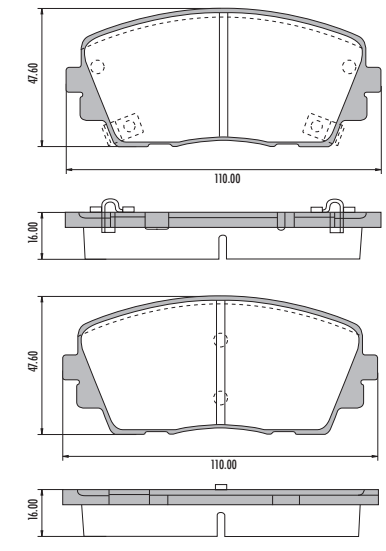

PD/359-A
WVA 29041
Brembo System
Sistema Brembo

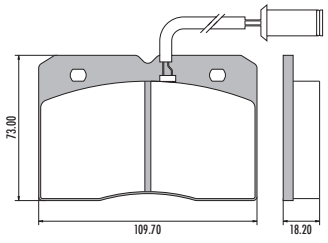

PD/45
Varga System
Sistema Varga

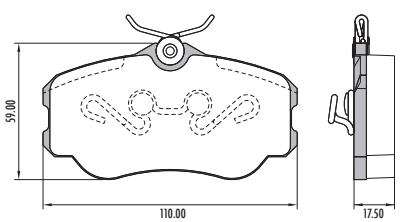

PD/1017

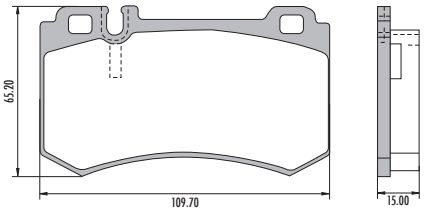

PD/432
WVA 23314
FMSI 7559 D680
Sumitomo System
Sistema Sumitomo

SHIM/ANTIRRUIDO

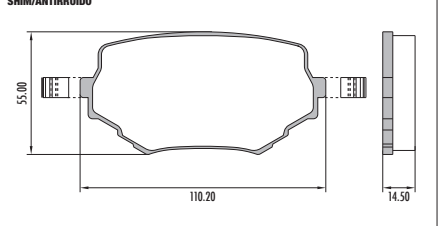

PD/415
FMSI 7513 D635
Lockheed System
Sistema Lockheed

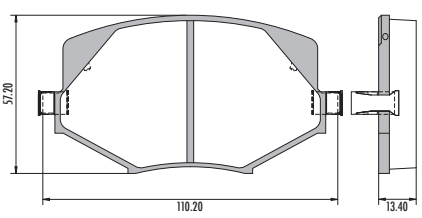

PD/813
FMSI 8218 D1114

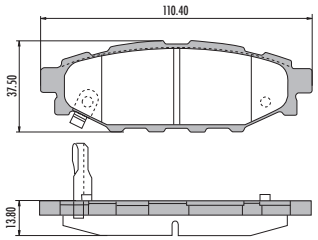

PD/441
WVA 21142
FMSI 7540 D660
Sumitomo System
Sistema Sumitomo

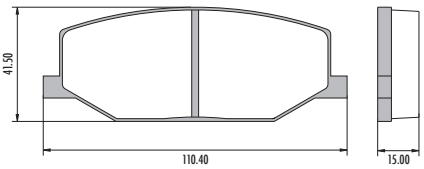

PD/1076
FMSI 8231 D1124

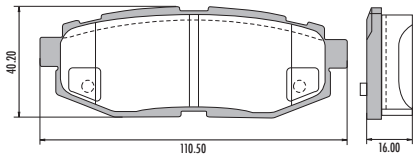

PD/1071
FMSI 8204 D1101

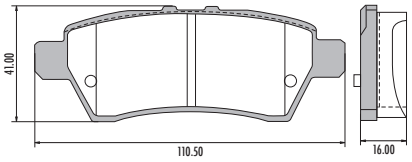

PD/646
FMSI 8272 D1161

SHIM/ANTIRRUIDO

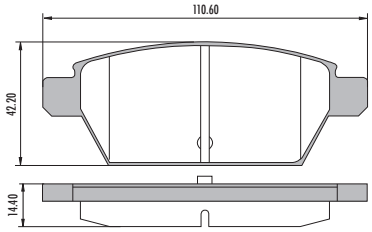

PD/1299
FMSI 8418 D1302
Hyundai System
Sistema Hyundai

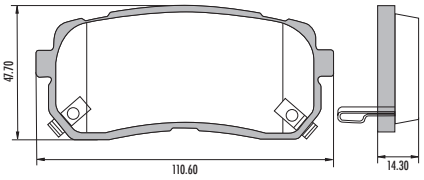

PD/1072
FMSI 8206 D1100

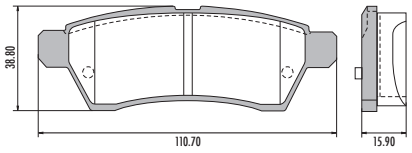

PD/1081
WVA 24545
FMSI 8378 D1259

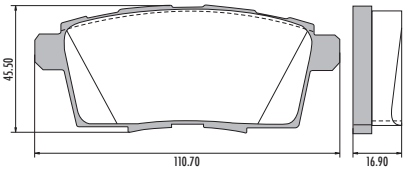

PD/715
WVA 24498 / 24499 / 24500
FMSI 8391 D1275
Akebono System
Sistema Akebono

SHIM/ANTIRRUIDO

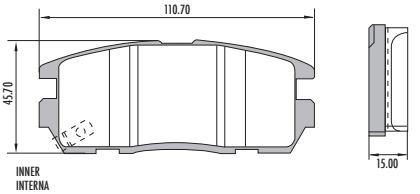

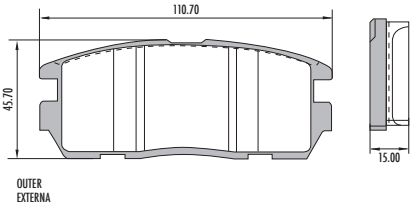

PD/611
WVA 23400
FMSI 7557 D677
Sumitomo System
Sistema Sumitomo

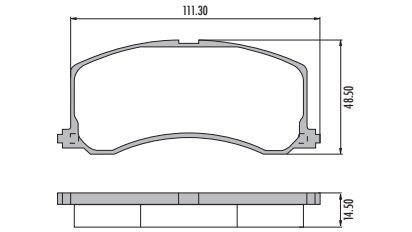

PD/496
WVA 23348 / 23349 / 23350
FMSI 7704 D381
Akebono System
Sistema Akebono

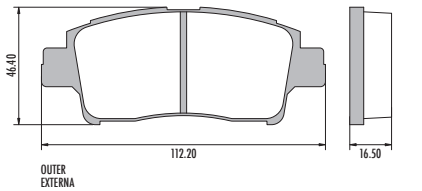

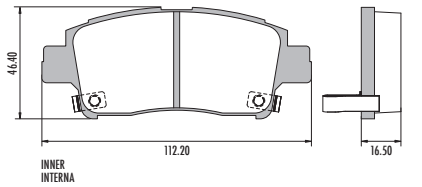

PD/793
FMSI 7895 D995

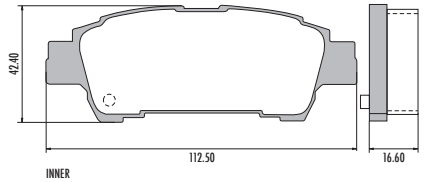

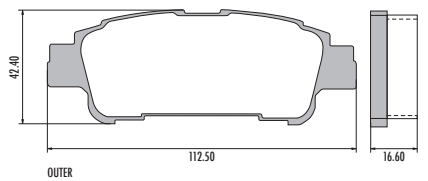

PD/1402
FMSI 7987 D1562

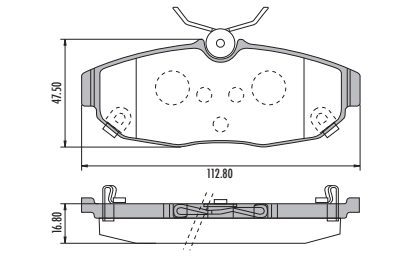

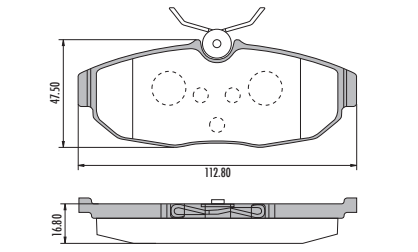

PD/1068
FMSI 7987 D1082

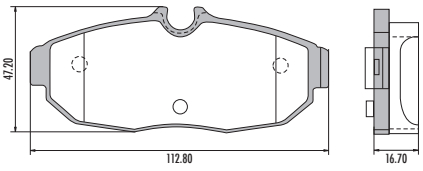

PD/726
FMSI 7993 D1088

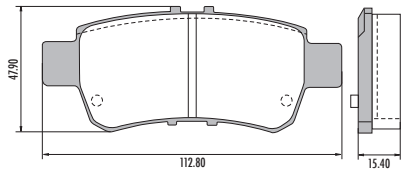

PD/1383
FMSI 8664 D1485

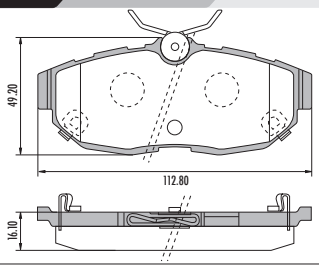

PD/1073
FMSI 8209 D1103

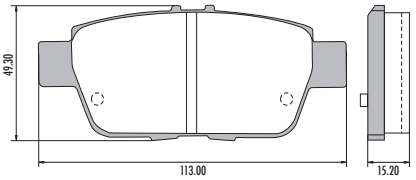

PD/1407
WVA 25434
FMSI 8397 D1585

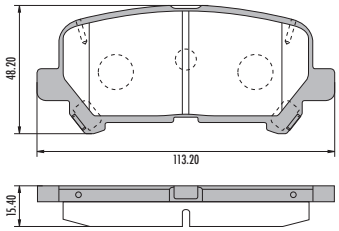

PD/1498

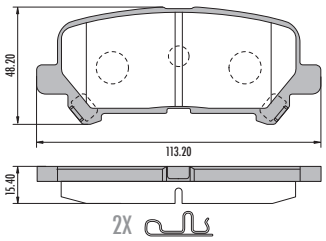

PD/437
FMSI 7951 D1048
Girling System
Sistema Girling

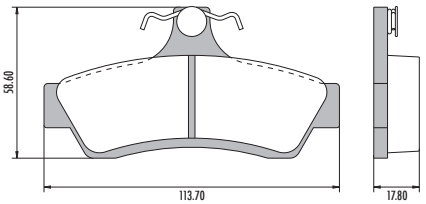

PD/766
FMSI 7937 D1033

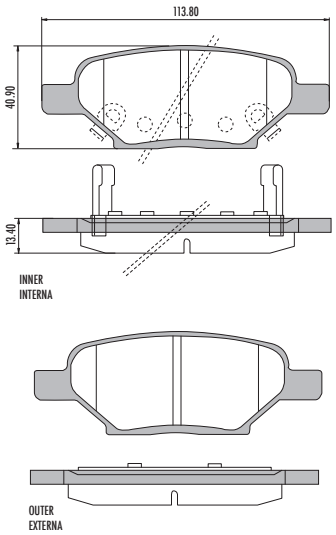

PD/470
WVA 23242 / 23243 / 23244
Girling System
Sistema Girling

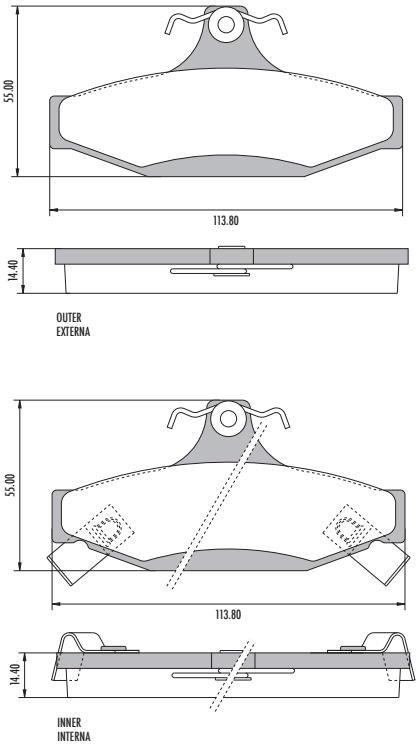

PD/710
FMSI 7591 D724

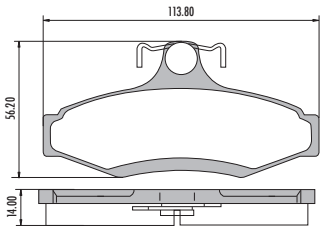

PD/1489
WVA 25599 / 25600 / 25601
FMSI 8951 D1727

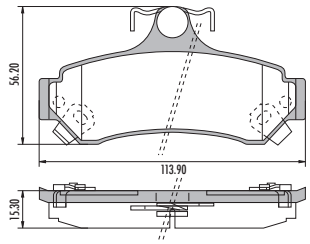

PD/452
WVA 21650
FMSI 7417 D535
Sumitomo System
Sistema Sumitomo

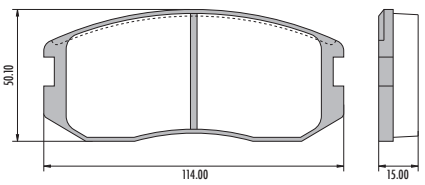

PD/742
WVA 24291
FMSI 7782 D904

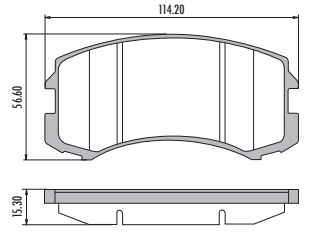

PD/76
FMSI 7679 D806
TRW System
Sistema TRW

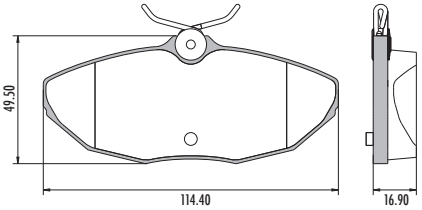

PD/1036
FMSI 7388 D509

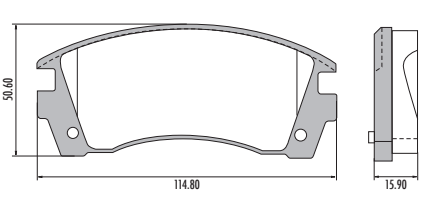

PD/380
WVA 21344 / 21345 / 21346
FMSI 7332 D452
Akebono System
Sistema Akebono

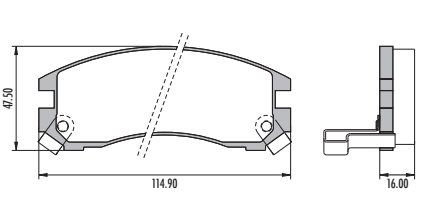

PD/440
FMSI 7290 D401
Sumitomo System
Sistema Sumitomo

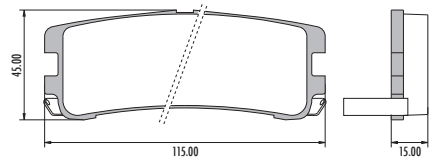

PD/1417
WVA 21436
FMSI 8831 D1619

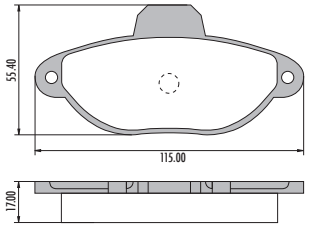

PD/1496

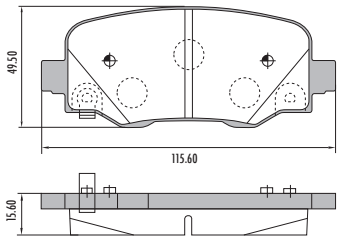

PD/516
WVA 23669
FMSI 8325 D1205
Bosch System
Sistema Bosch

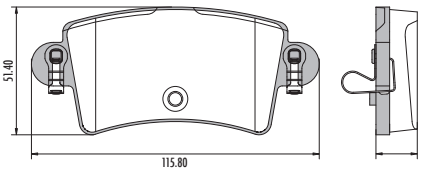

PD/599
WVA 23557
FMSI 7790 D911

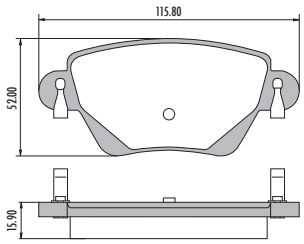

PD/402-A
WVA 21586 / 21587
FMSI 7541 D661
Bendix System
Sistema Bendix

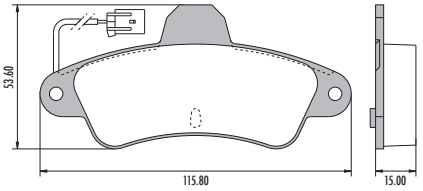

PD/1495

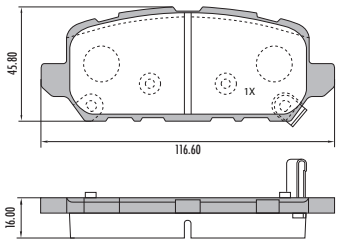

PD/1369
WVA 24606/ 25214
FMSI 8785 D1547

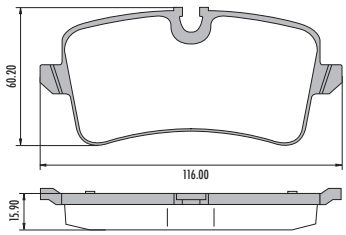

PD/1031
FMSI 7127 D207

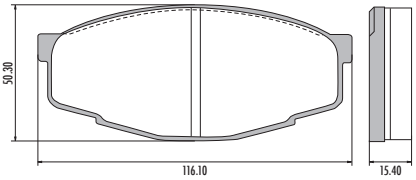

PD/765
FMSI 7926 D1021

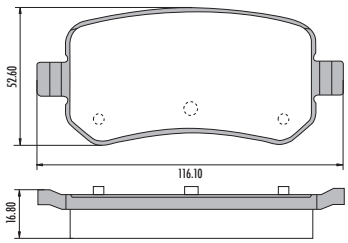

PD/592-B
FMSI 7932 D1028
Lucas System
Sistema Lucas

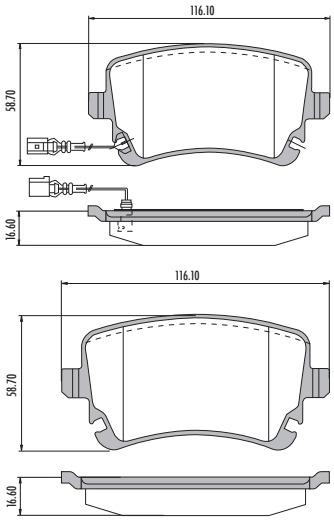

PD/633
WVA 24275 / 24411 / 24275
FMSI 8851 D1601
Akebono System
Sistema Akebono

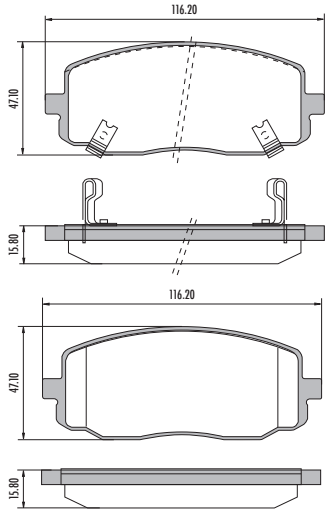

PD/592
WVA 23882
FMSI 7921 D1018

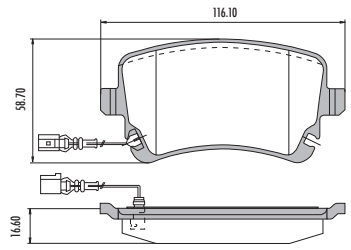

PD/607
WVA 21537
FMSI 7320 D433
Sumitomo System
Sistema Sumitomo

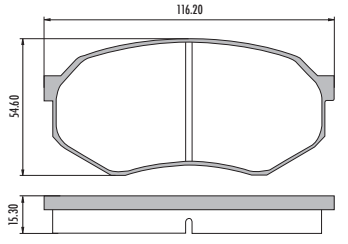

PD/1002
FMSI 7276 D389

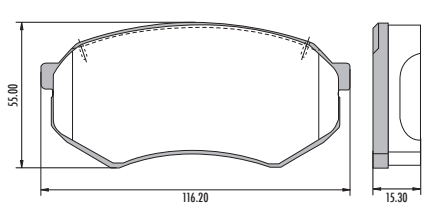

PD/695
FMSI 7487 D606
Sumitomo System
Sistema Sumitomo

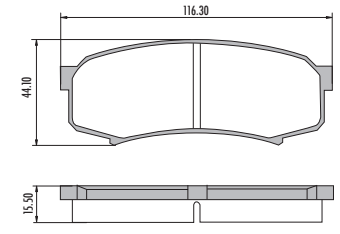

PD/1085
FMSI 8420 D1304

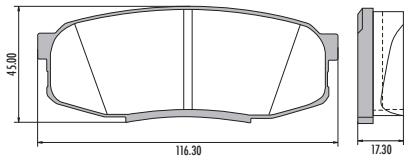

PD/789
WVA 23510/ 23511/ 23512
FMSI 7695 D822

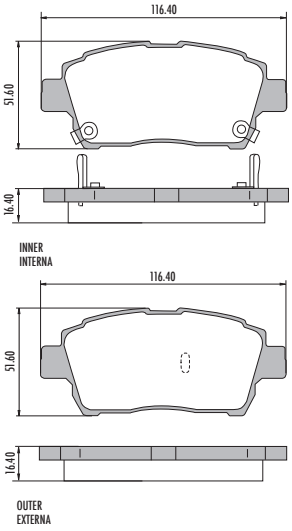

PD/67
Girling System
Sistema Girling

SHIM/ANTIRRUIDO

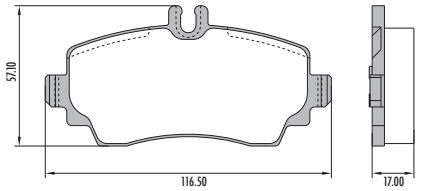

PD/67-A
WVA 23070
Girling System
Sistema Girling

SHIM/ANTIRRUIDO

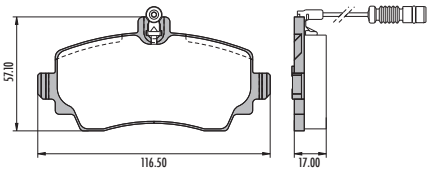

PD/1082
FMSI 8390 D1274

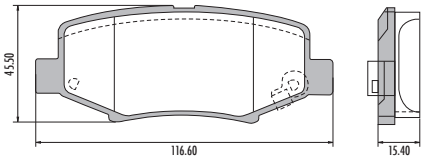

PD/1070
FMSI 8203 D1099

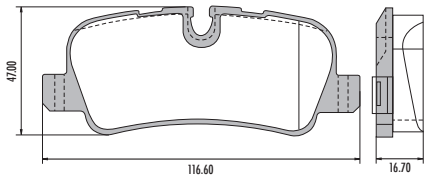

PD/1090
FMSI 8488 D1377

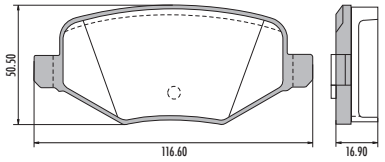

PD/1339

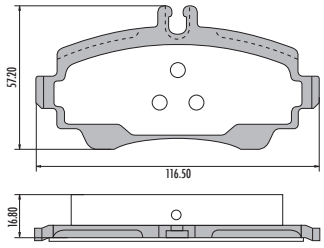

PD/1386
WVA 23973/ 24403
FMSI 8691 D1491
TRW System
Sistema TRW

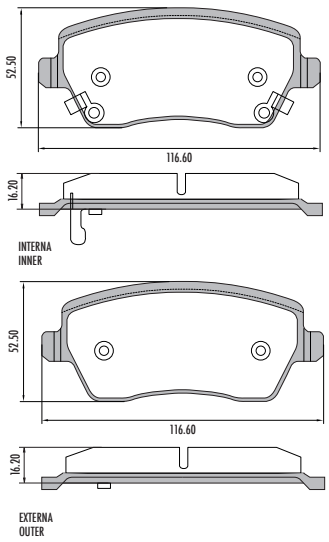

PD/636
FMSI 7839 D937

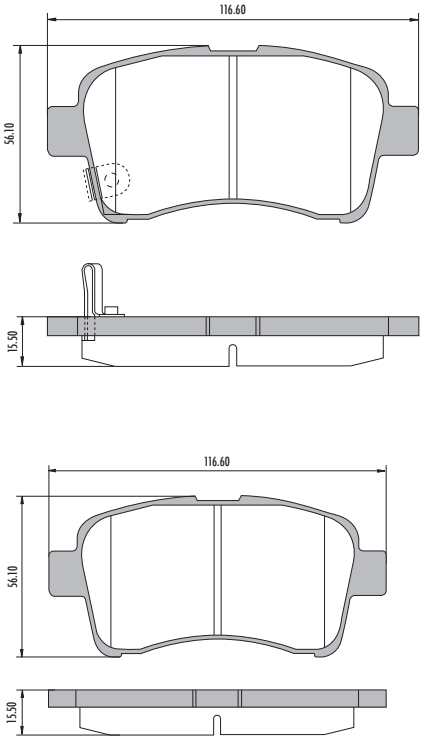

PD/1415
WVA 25458 / 25459 / 24460
FMSI 8825 D1612

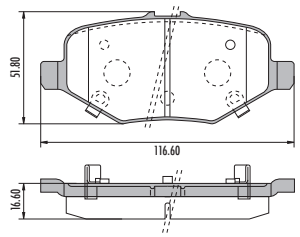

PD/1461
WVA 25085
FMSI 8544 D1427

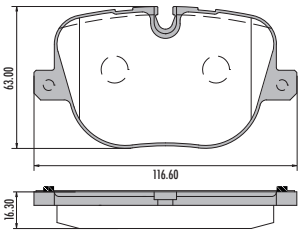

PD/419
WVA 21907
FMSI 7435 D556
Akebono System
Sistema Akebono

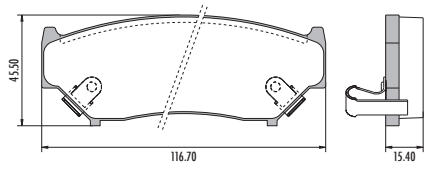

PD/1476
WVA 24077
Bosch System
Sistema Bosch

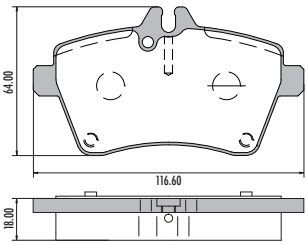

PD/1102

WVA 25096 / 25097 / 25098
FMSI 8668 D1468

Bosch System
Sistema Bosch

SHIM/ANTIRRUIDO

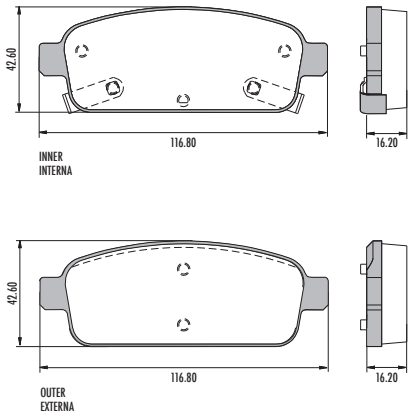

PD/1487

WVA 29013

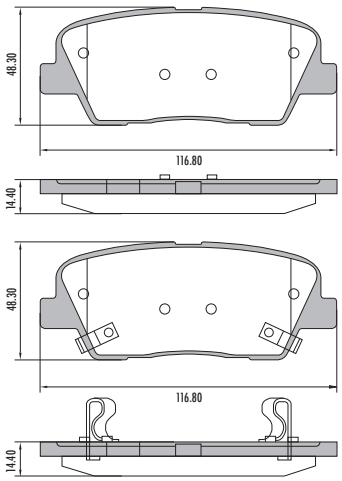

PD/1366

FMSI 8575 D1439

Akebono System
Sistema Akebono

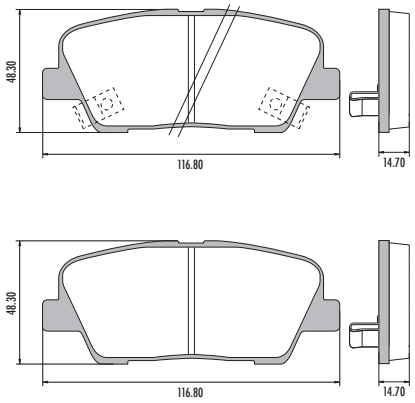

PD/300

WVA 24822 / 28823 / 24824
FMSI 8438 D1326

TRW System
Sistema TRW

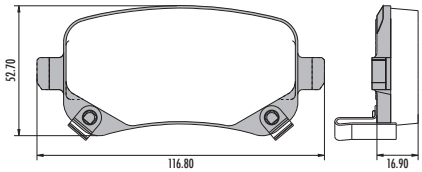

PD/712

WVA 23294
FMSI 7611 D741

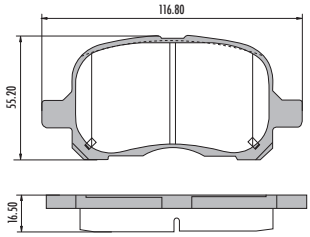

PD/1350

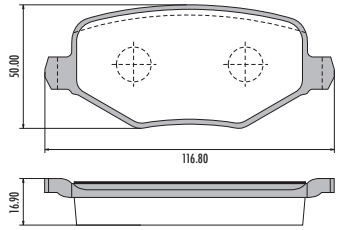

PD/707

WVA 23513
FMSI 7581 D707

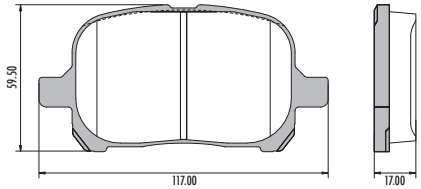

PD/788

FMSI 7691 D817

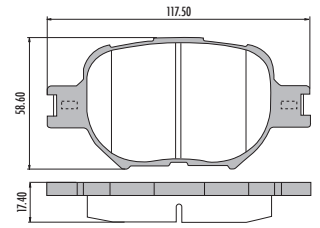

PD/1009

WVA 23271
FMSI 7723 D847

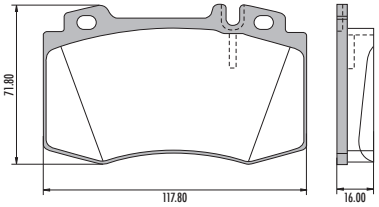

PD/71

Varga System
Sistema Varga

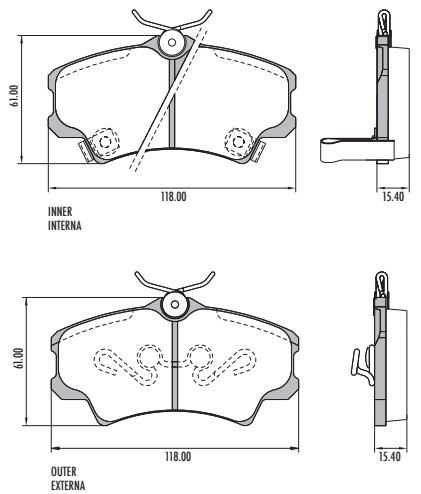

PD/409

WVA 21520

Girling System
Sistema Girling

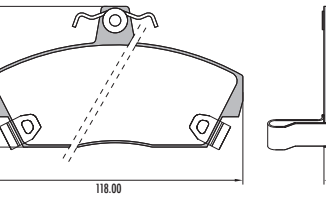

PD/668

WVA 23993
FMSI 8379 D1261

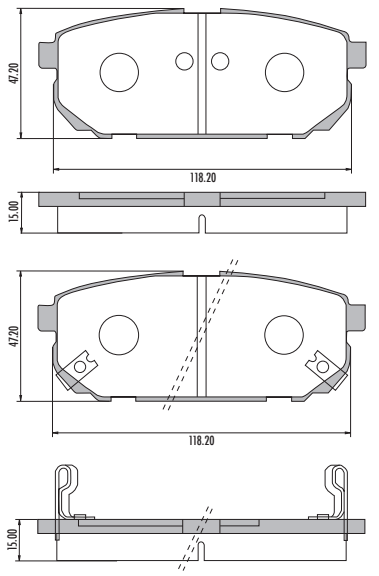

PD/1341

WVA 24488/ 24489/ 24490
FMSI 8414 D1297

Brembo System
Sistema Brembo

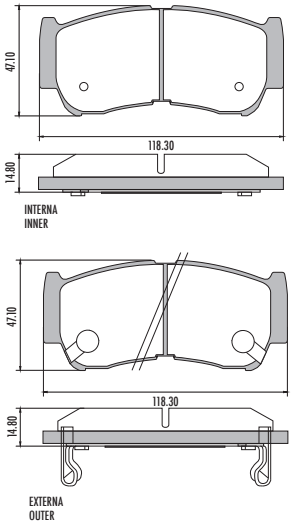

PD/794

FMSI 7853 D954

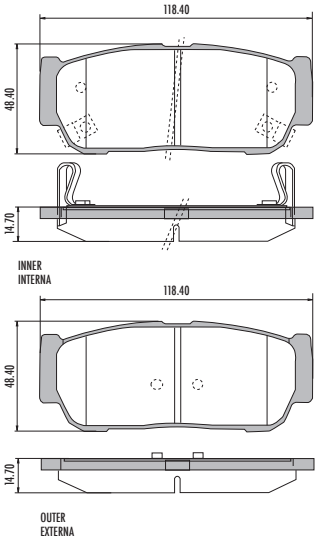

PD/815

FMSI 8270 D1160

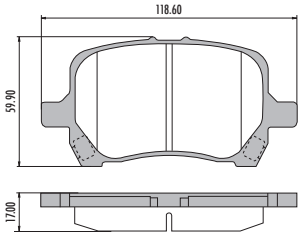

PD/593

FMSI 7932 D1028

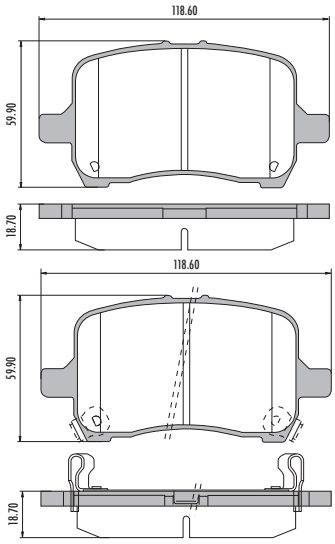

PD/413

WVA 21945
FMSI 7578 D704

Girling System
Sistema Girling

SHIM/ANTIRRUIDO

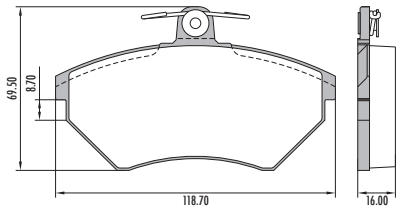

PD/443

WVA 21945

Girling System
Sistema Girling

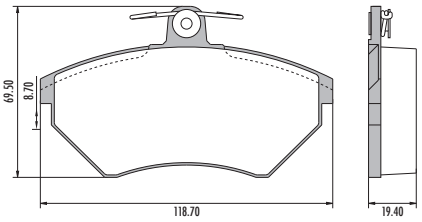

PD/466

WVA 20778
FMSI 7177 D227

Girling System
Sistema Girling

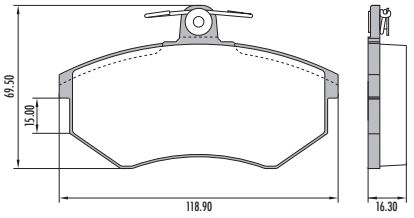

PD/467

WVA 20778
FMSI 7143 D227

Girling System
Sistema Girling

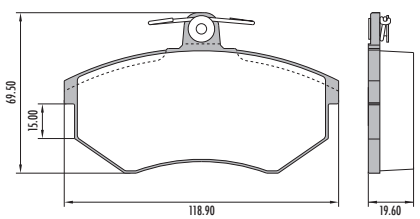

PD/329

WVA 20168
FMSI 7570 D696A

Girling System
Sistema Girling

SHIM/ANTIRRUIDO

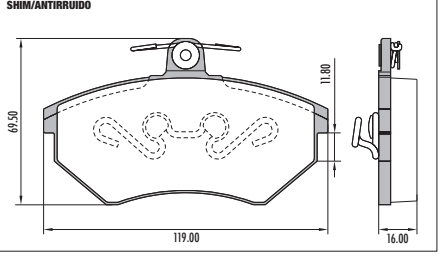

PD/337

WVA 20168
FMSI 7570 D696

Girling System
Sistema Girling

SHIM/ANTIRRUIDO

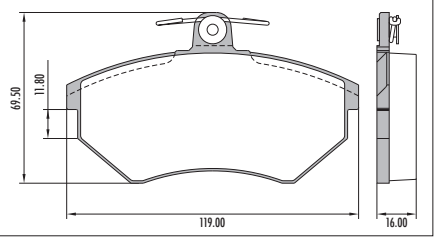

PD/336

WVA 20168
FMSI 7571 D684A

Girling System
Sistema Girling

SHIM/ANTIRRUIDO

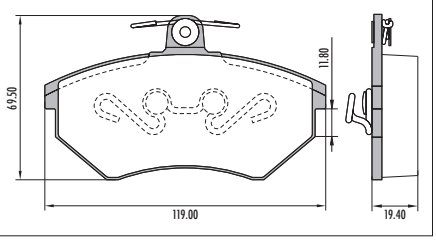

PD/602

WVA 20669 / 21366
FMSI 7571 D684

Girling System
Sistema Girling

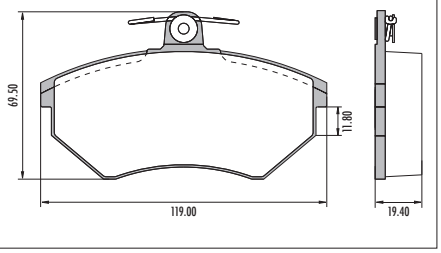

PD/527

WVA 21775 / 21776
FMSI 7671 D799

TRW System
Sistema TRW

SHIM/ANTIRRUIDO

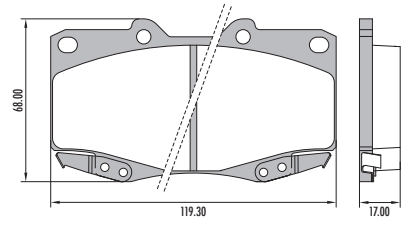

PD/773

FMSI 7549 D436

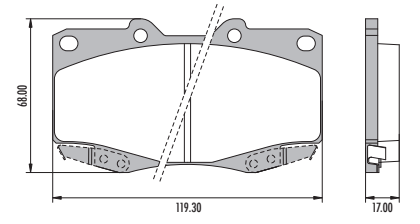

PD/115
WVA 21679 / 21785/ 21789 / 21790
FMSI 7298 D436
Sumitomo System
Sistema Sumitomo

SHIM/ANTIRRUIDO

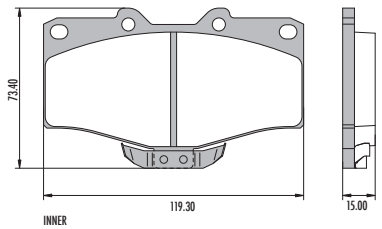

INNER
INTERNA

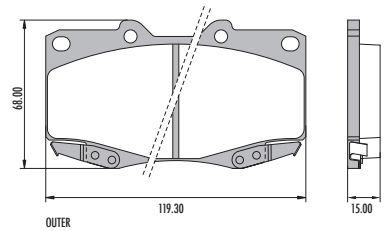

OUTER
EXTERNA

PD/724
FMSI 7687 D812

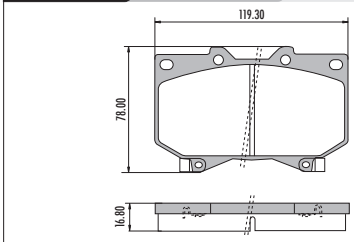

PD/1035
FMSI 7381 D501

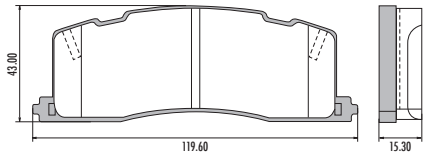

PD/603
WVA 23200

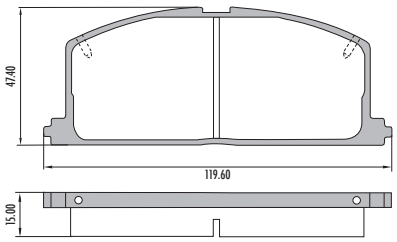

PD/680
WVA 20870 15.0
FMSI 7153 D242
Akebono System
Sistema Akebono

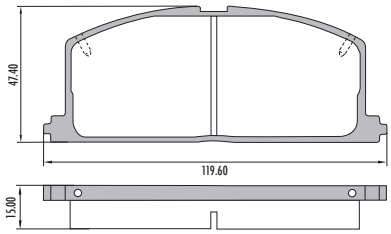

PD/1474
FMSI 7887 D985
Brembo System
Sistema Brembo

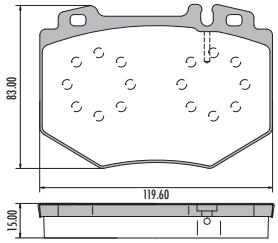

PD/1471
WVA 21471
FMSI 7517 D639
Brembo System
Sistema Brembo

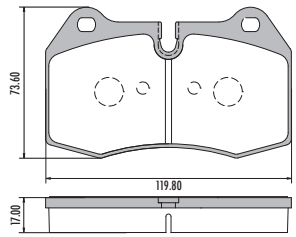

PD/426
WVA 21372
FMSI 7247 D356
Sumitomo System
Sistema Sumitomo

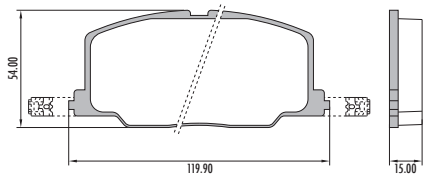

PD/1065
FMSI 7935 D1030

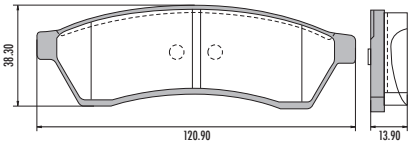

PD/1448
WVA 23732/ 23737

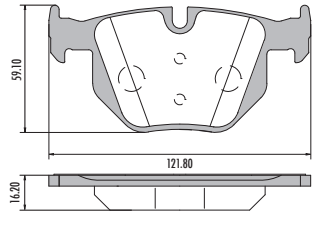

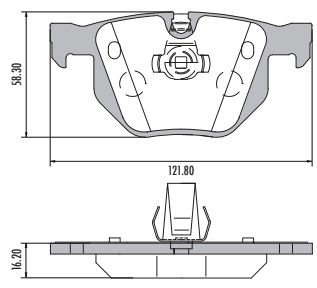

PD/792
FMSI 7823 D922

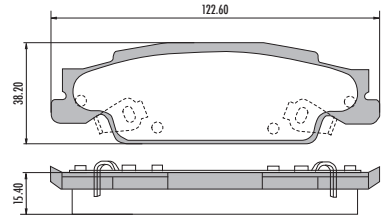

INNER
INTERNA

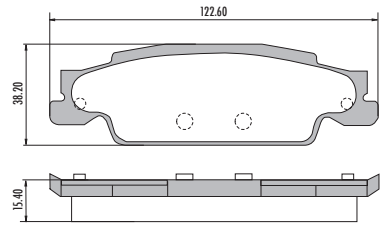

OUTER
EXTERNA

PD/648
WVA 23406 / 23407
FMSI 8340 D1219
Girling System
Sistema Girling

SHIM/ANTIRRUIDO

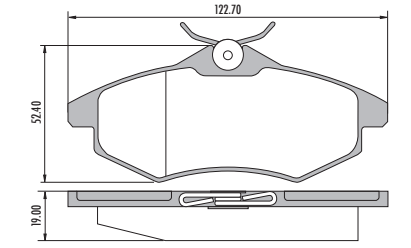

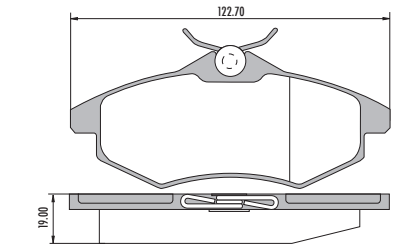

PD/621
FMSI 8301 D1184

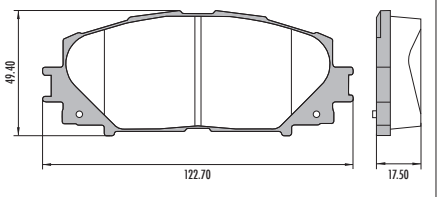

PD/1423
WVA 24708
FMSI 8845 D1628

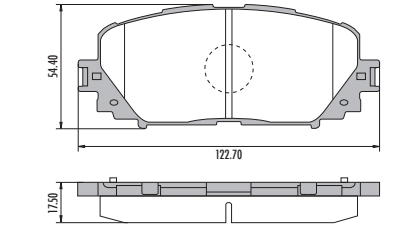

PD/1051
FMSI 7665 D795

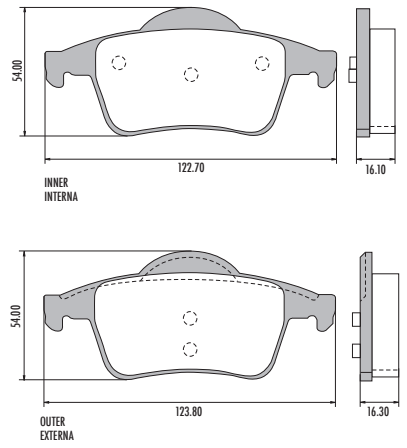

PD/1029-A
WVA 24486
FMSI 8701 D1502
Knorr System
Sistema Knorr

SHIM/ANTIRRUIDO

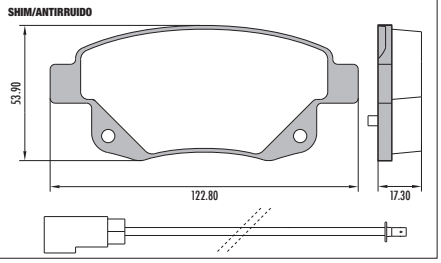

PD/321-A
WVA 21016
FMSI 7244 D351
Tensa System
Sistema Tensa

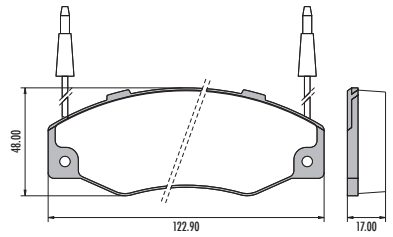

PD/488
WVA 21607
FMSI 7286 D396
Teves System
Sistema Teves

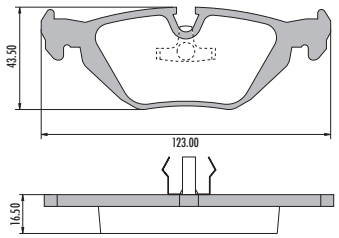

PD/74
WVA 23487
Sumitomo System
Sistema Sumitomo

SHIM/ANTIRRUIDO

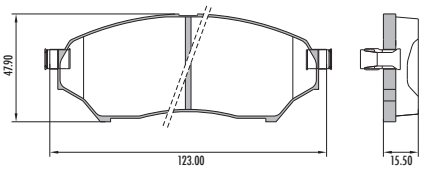

PD/1441
WVA 29013

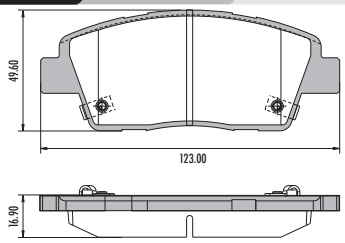

PD/509-B
WVA 23705 / 23706 / 23707
Bosch System
Sistema Bosch

SHIM/ANTIRRUIDO

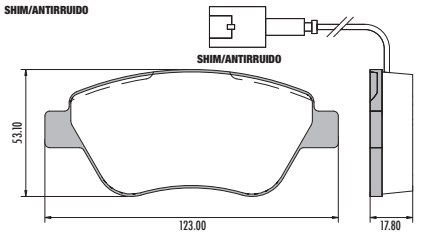

PD/509-A
SHIM/ANTIRRUIDO

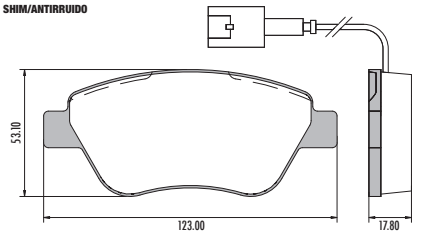

PD/1513

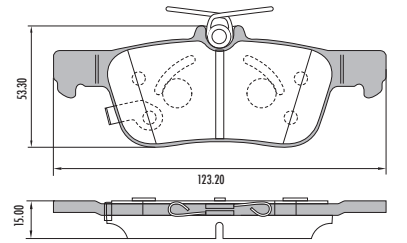

PD/812
FMSI 8211 D1105

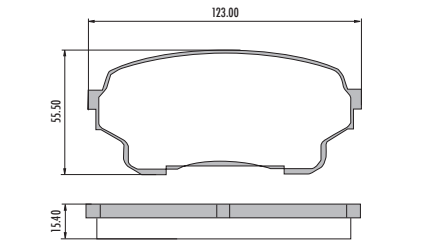

PD/787
FMSI 7670 D798

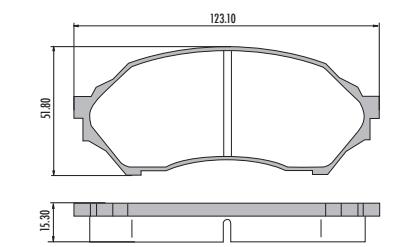

PD/796
WVA 23482
FMSI 7957 D973

SHIM/ANTIRRUIDO

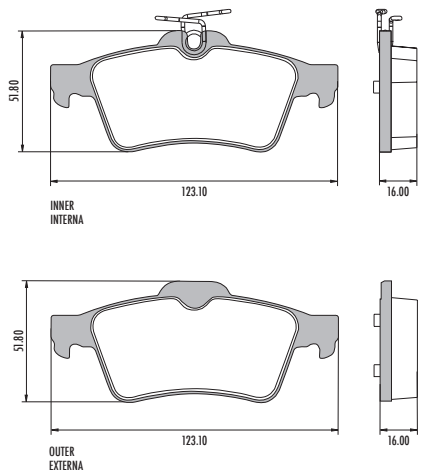

PD/1491
WVA 25008 / 25010
FMSI 8990 D1761

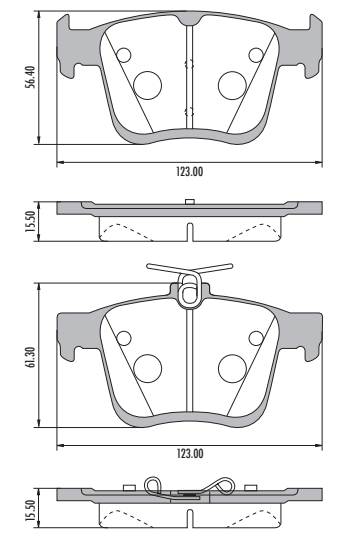

PD/628
WVA 23585
FMSI 7738 D862
Sumitomo System
Sistema Sumitomo

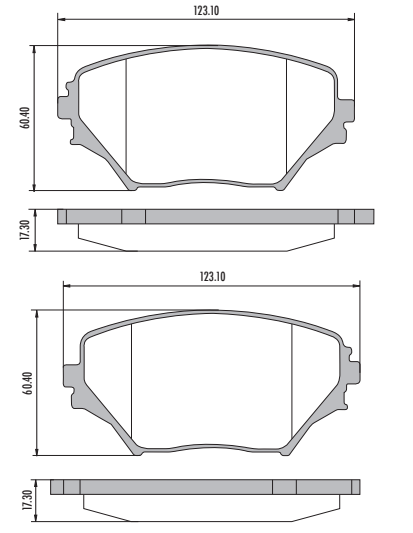

PD/1059
FMSI 7842 D1060

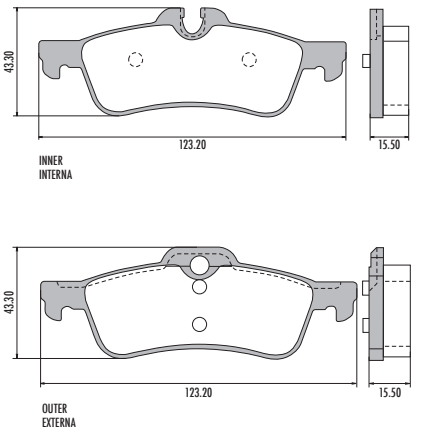

PD/1337
FMSI 7286 D1171 7286 D1267

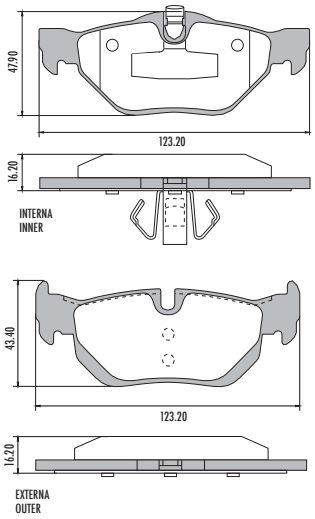

PD/819
WVA 23539
FMSI 7640 D773

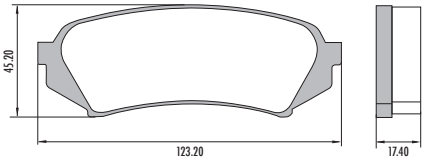

PD/1061
FMSI 7874 D1095

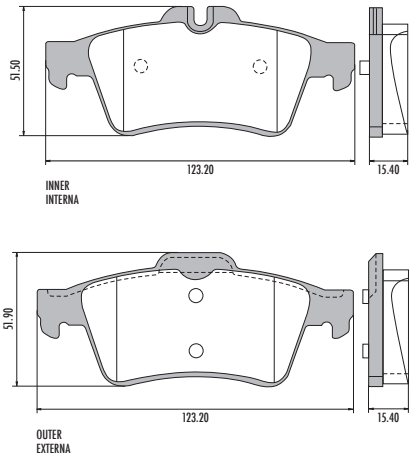

PD/748
WVA 23836
FMSI 7824 D923

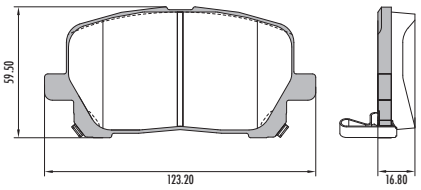

PD/1038
FMSI 7427 D683

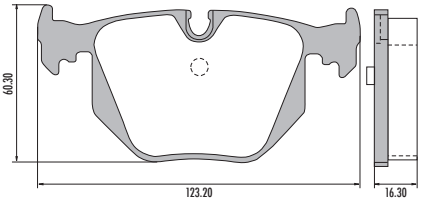

PD/1062
FMSI 7883 D980

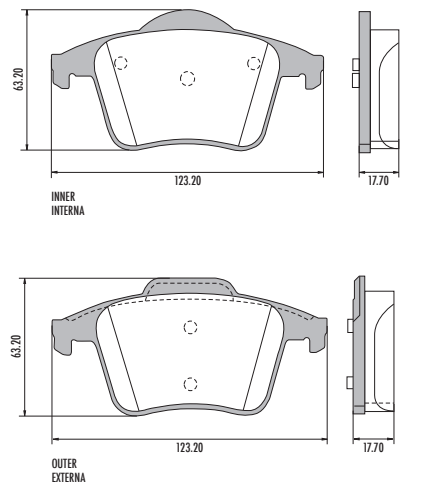

PD/716
FMSI 7631 D763
Teves System
Sistema Teves

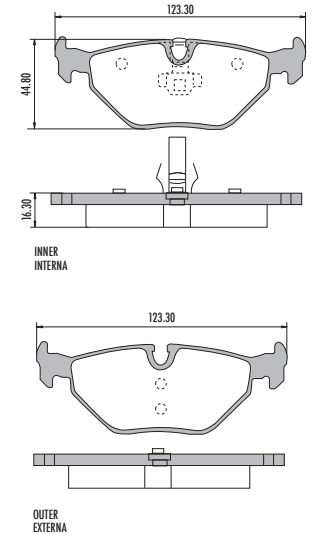

PD/517
FMSI 7070A D154
Bendix System
Sistema Bendix

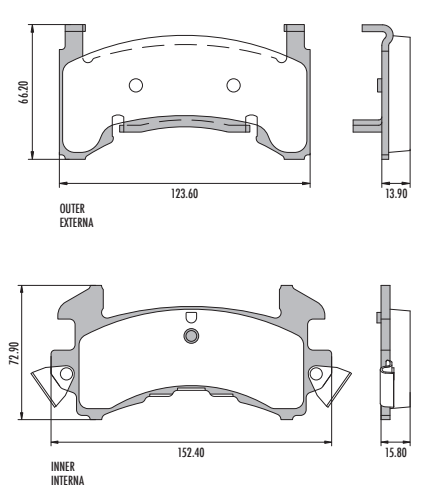

PD/1351

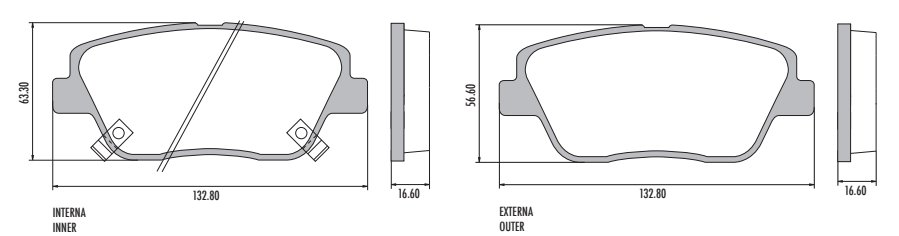

PD/761
FMSI 7890 D988

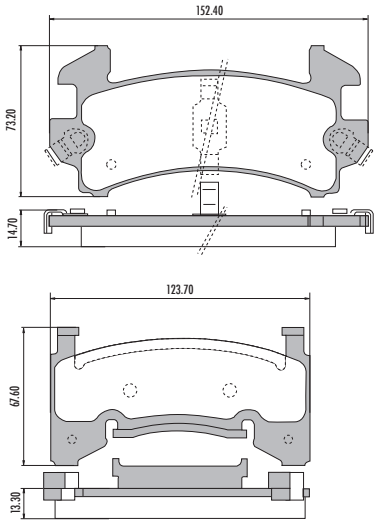

PD/1351
FMSI 8595 D1444

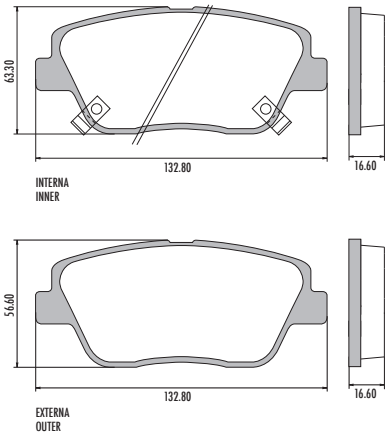

PD/1479
WVA 25321
FMSI 8888 D1661

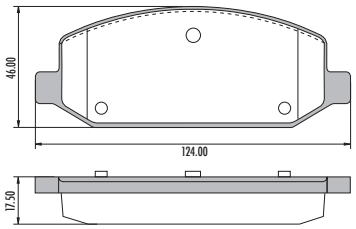

PD/1438

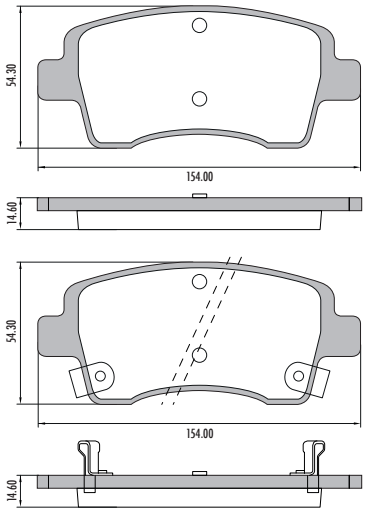

PD/389
WVA 23637
FMSI 7479 D601
Girling System
Sistema Girling

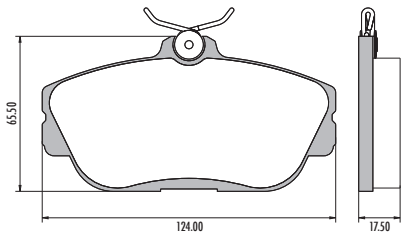

PD/595
WVA 23463
FMSI 8257 D1147
Girling System
Sistema Girling

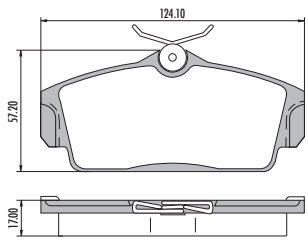

PD/678
FMSI 7476 D598

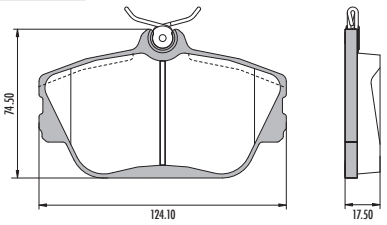

PD/1077
WVA 24346
FMSI 8307 D1188

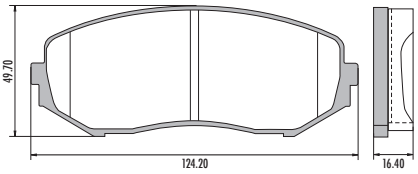

PD/531
WVA 23532
FMSI 7716 D841
Teves System
Sistema Teves

SHIM/ANTIRRUIDO

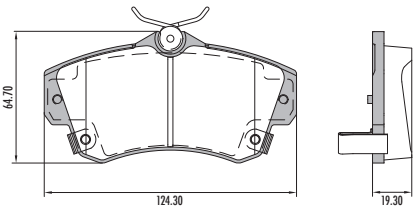

PD/548
FMSI 7260 D370

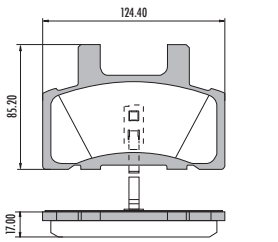

INNER
INTERNA

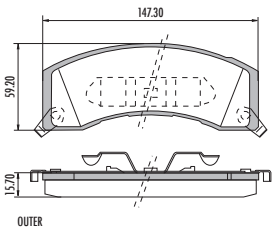

OUTER
EXTERNA

PD/1431
WVA 20011
FMSI 7021 D45 - 734 D45
Kelsey Hayes System
Sistema Kelsey Hayes

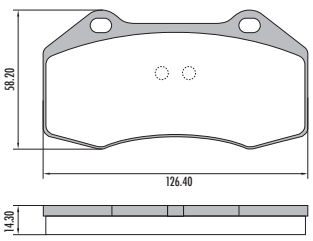

PD/756
FMSI 7855 D956

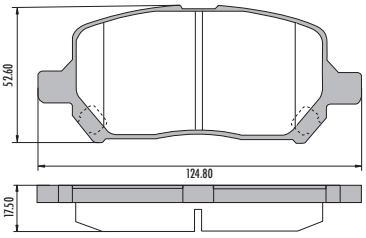

PD/810
FMSI 7999 D1093

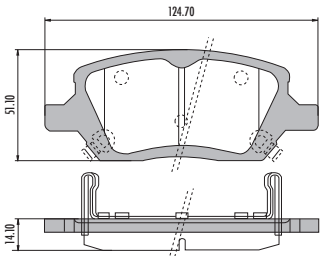

INNER
INTERNA

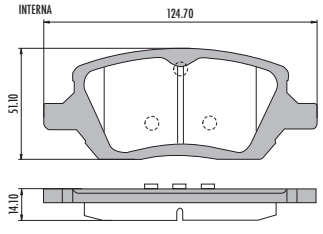

OUTER
EXTERNA

PD/617

FMSI 7603 D734 — Sumitomo System / Sistema Sumitomo

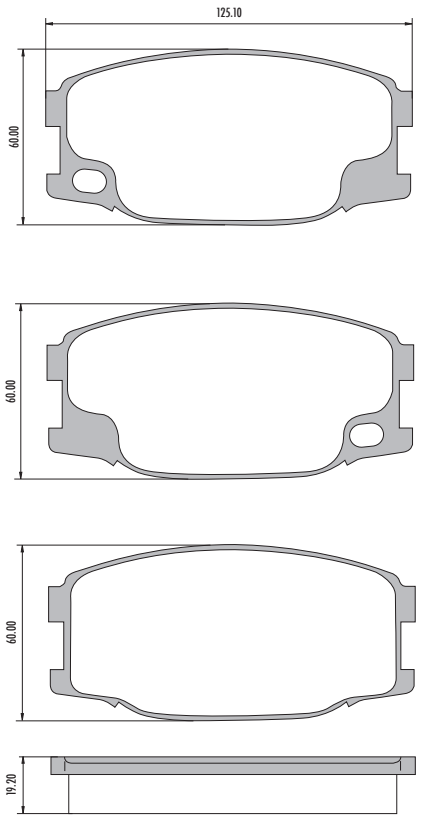

PD/1097

WVA 24283 / 24284 / 24285
FMSI 8653 D1454

SHIM/ANTIRRUIDO

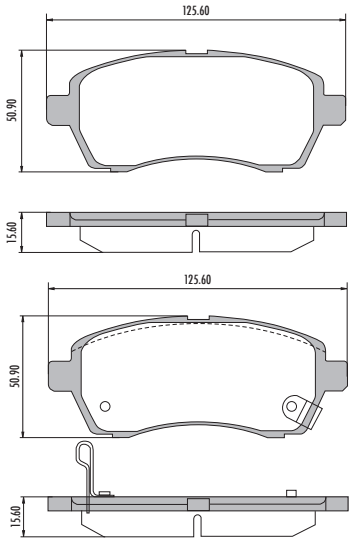

PD/118

WVA 23021
FMSI 7829 D928 — Bosch System / Sistema Bosch

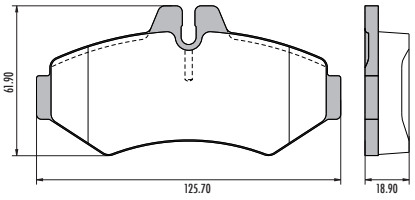

PD/118-A

FMSI 7829 D928 — Bosch System / Sistema Bosch

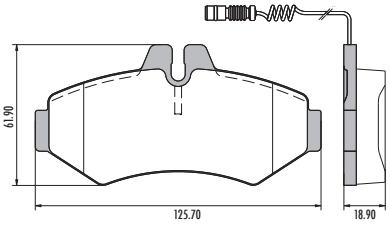

PD/551

FMSI 7339 D459 (small clip)

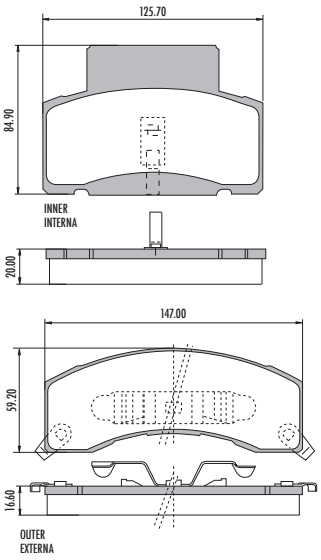

PD/552

FMSI 7339 D459 (big clip)

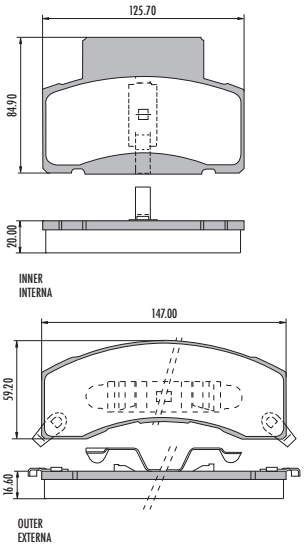

PD/546

FMSI 7192 D289

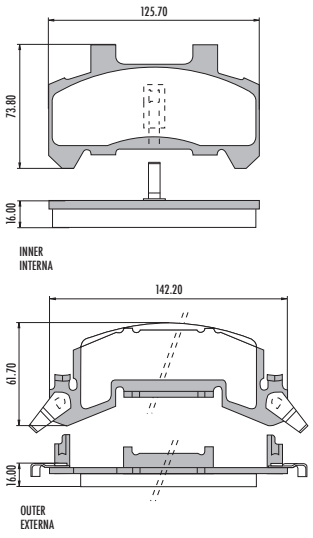

PD/547

FMSI 7259 D368

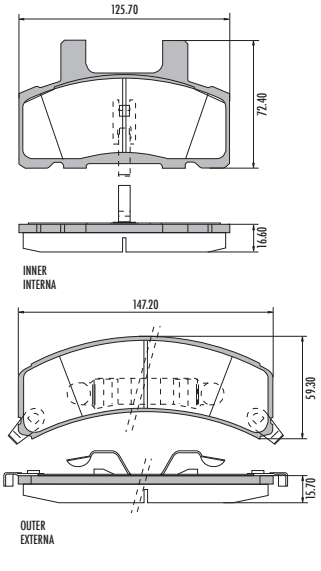

PD/32

WVA 20660 — Bendix System / Sistema Bendix

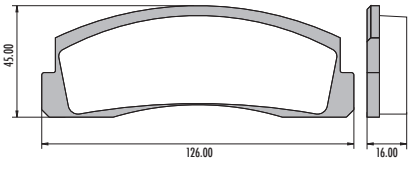

PD/399

WVA 20410
FMSI 7371 D491 — Brembo System / Sistema Brembo

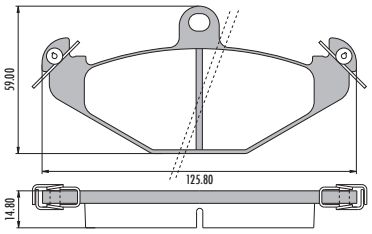

PD/482

WVA 21964 — Brembo System / Sistema Brembo

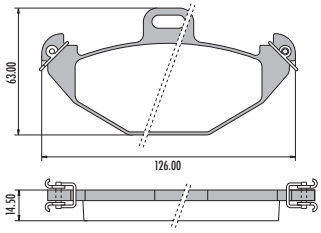

PD/502
FMSI 7259 D369 — Bendix System / Sistema Bendix

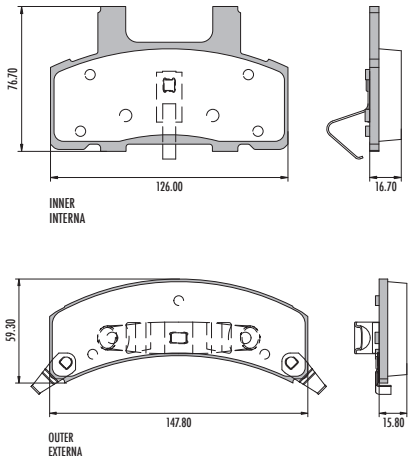

PD/540
FMSI 7070C D183

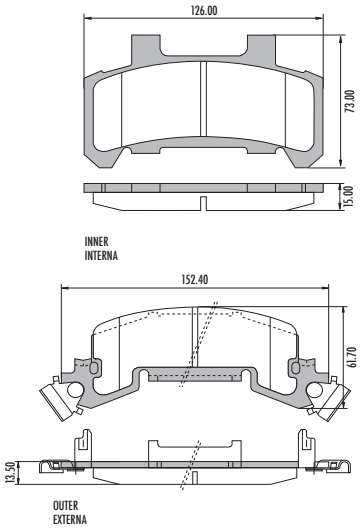

PD/499
FMSI 7136 D215 — Bendix System / Sistema Bendix

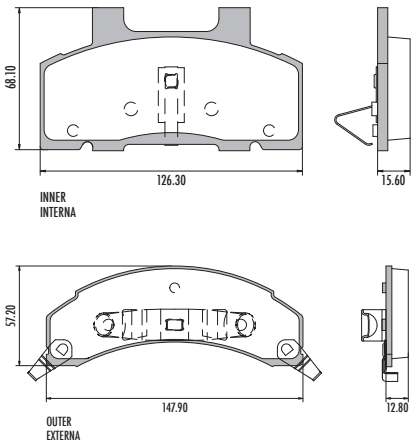

PD/1384
FMSI 8671 D1471

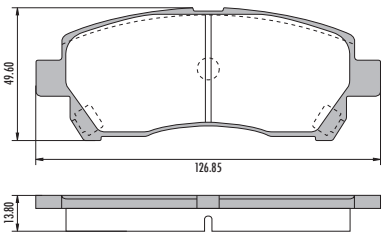

PD/474
WVA 21519
FMSI 7551 D671 — Lockheed System / Sistema Lockheed

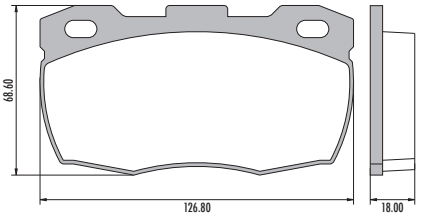

PD/612
WVA 23032
FMSI 7587 D716 — Akebono System / Sistema Akebono

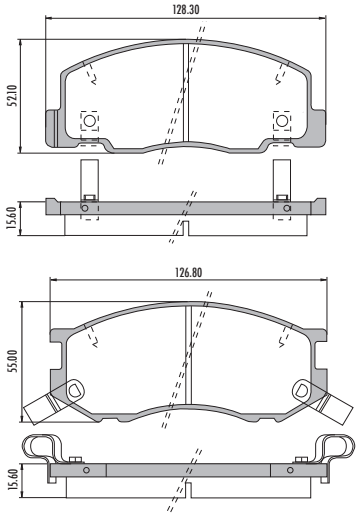

PD/598
WVA 23241
FMSI 8433 D1321 — Akebono System / Sistema Akebono

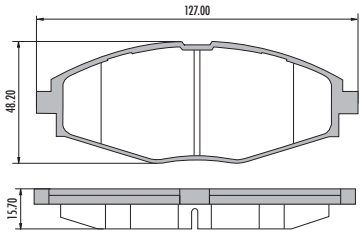

PD/357
WVA 21467 / 21543 / 21544
FMSI 7253 D363 - 7347 D363 — Akebono System / Sistema Akebono

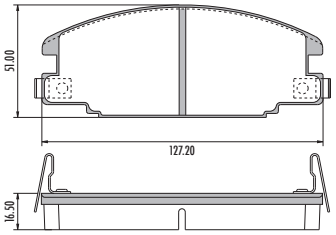

PD/549
WVA 21012
FMSI 7293 D404 — Akebono System / Sistema Akebono

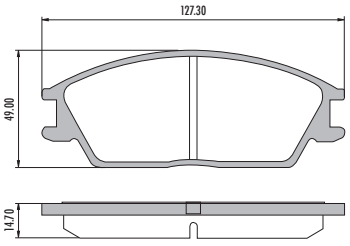

PD/382
WVA 21773
FMSI 7376 D497 - 7293 D440 — Akebono System / Sistema Akebono

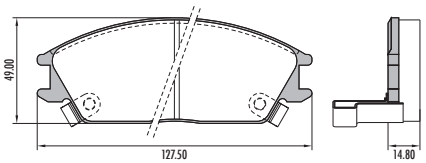

PD/423
WVA 21495
FMSI 7350 D470 — Sumitomo System / Sistema Sumitomo

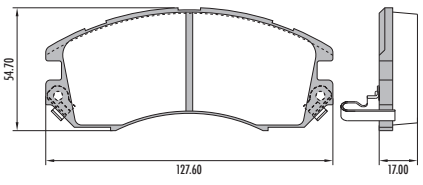

PD/469
WVA 21647
FMSI 7365 D484 — Sumitomo System / Sistema Sumitomo

SHIM/ANTIRRUIDO

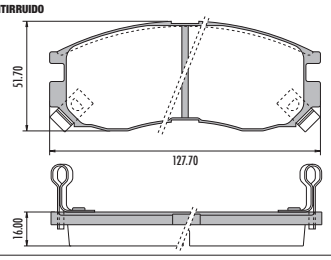

PD/386
WVA 21331
FMSI 7178 D273 — Akebono System / Sistema Akebono

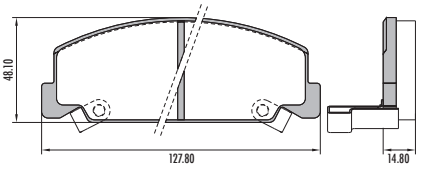

PD/687
FMSI 7386 D507

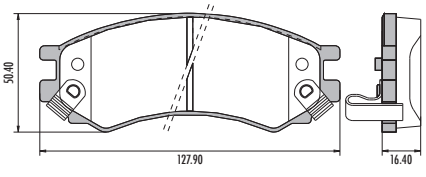

PD/377

WVA 21373
FMSI 7241 D349
Sumitomo System
Sistema Sumitomo

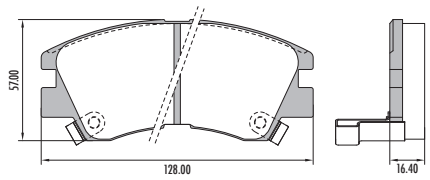

PD/782

FMSI 7493 D617

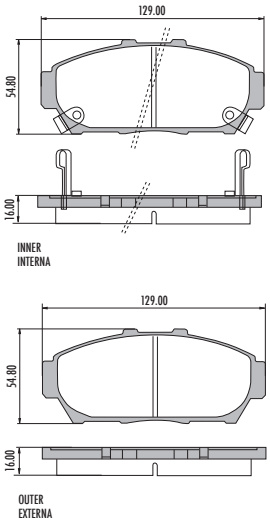

PD/1440-B

WVA 25112/ 25113

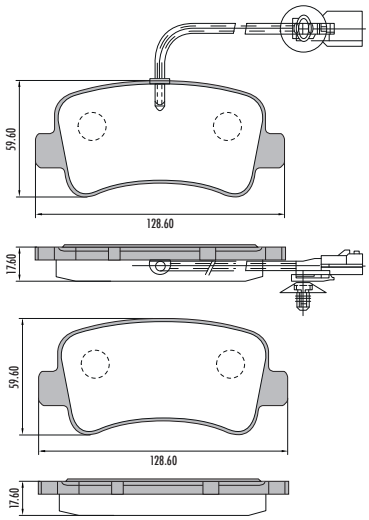

PD/791

FMSI 7767 D889

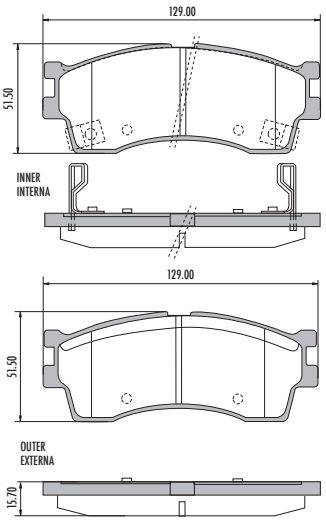

PD/514

WVA 23409
Girling System
Sistema Girling

SHIM/ANTIRRUIDO

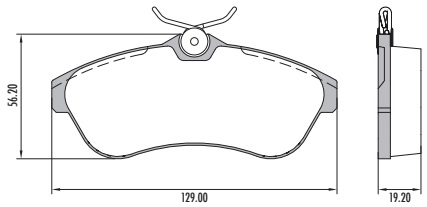

PD/463-B

WVA 21245
FMSI 7294 D405
Girling System
Sistema Girling

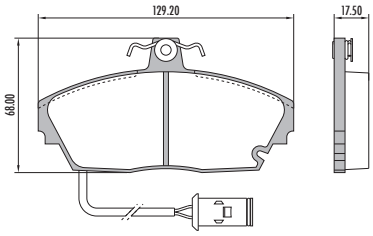

PD/394

WVA 21515
Girling System
Sistema Girling

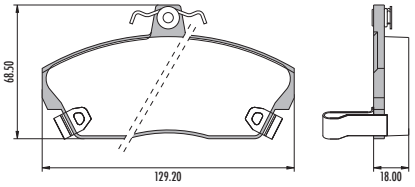

PD/1379

WVA 20104
FMSI 8657 D1457

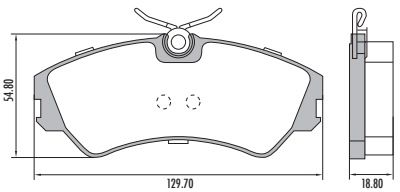

PD/1279

WVA 24317 / 24318 / 24319
FMSI 8266 D1156

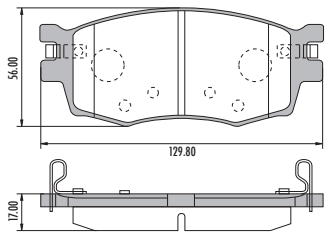

PD/406

WVA 21479
FMSI 7516 D638
Girling System
Sistema Girling

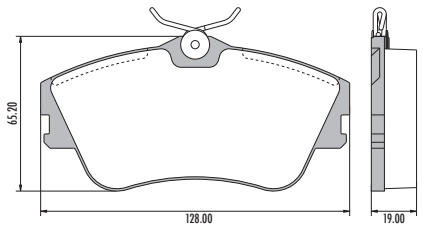

PD/406-B

WVA 21479 / 23445
FMSI 7729 D852
Girling System
Sistema Girling

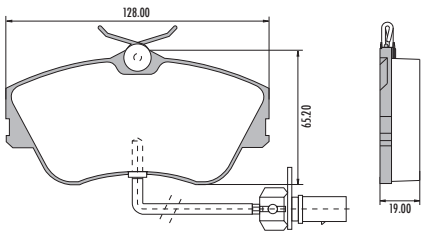

PD/473

WVA 23081 / 23082 / 23083
FMSI 8247 D1137
Girling System
Sistema Girling

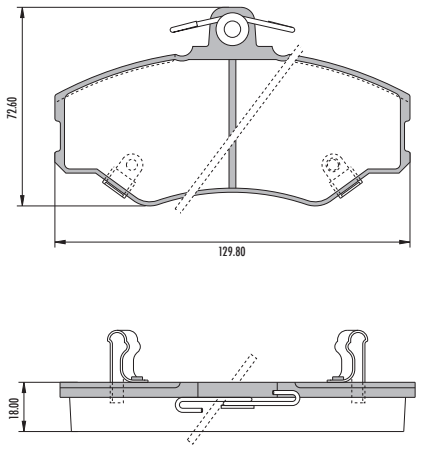

PD/1442

WVA 23920
Girling System
Sistema Girling

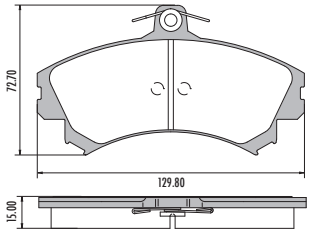

PD/325-A

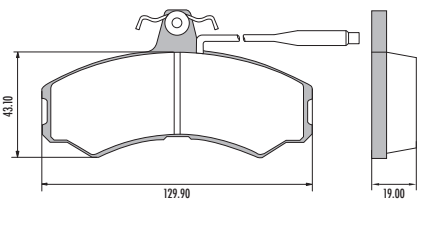

PD/391-A
WVA 21388 | FMSI 8255 D1145 | Girling System / Sistema Girling

SHIM/ANTIRRUIDO

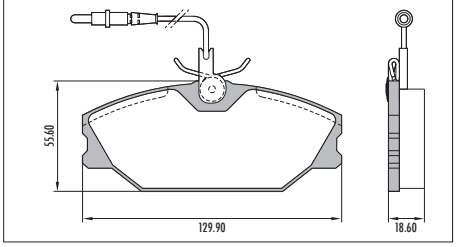

PD/40
WVA 21368 | Varga System / Sistema Varga

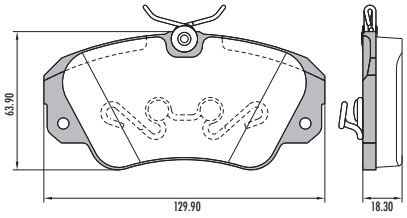

PD/428
WVA 21119 | FMSI 7282 D266 - 7282 D441 | Akebono System / Sistema Akebono

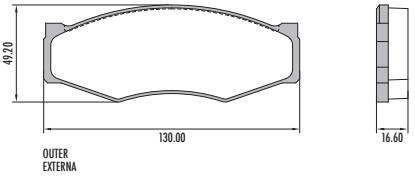

OUTER
EXTERNA

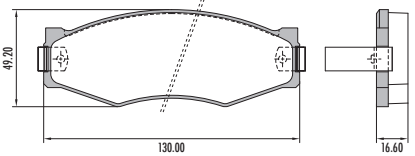

INNER
INTERNA

PD/414-E
WVA 21724 | Girling System / Sistema Girling

SHIM/ANTIRRUIDO

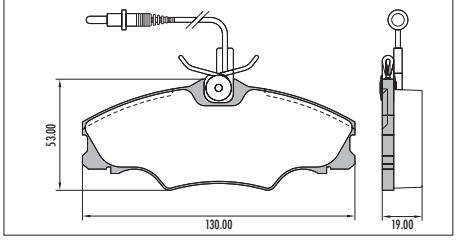

PD/1410
WVA 25376 / 25377 | FMSI 8811 D1596

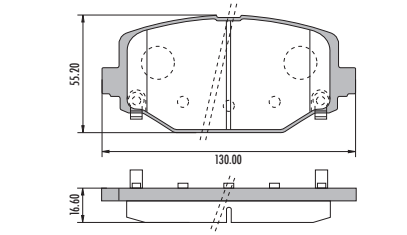

PD/411
WVA 23346 | Girling System / Sistema Girling

SHIM/ANTIRRUIDO

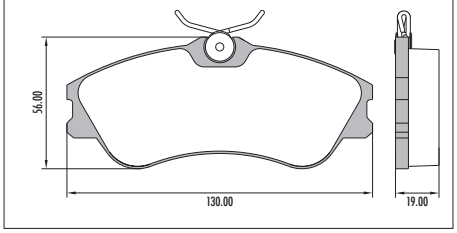

PD/411-E
WVA 23124 | FMSI 8309 D1190 | Girling System / Sistema Girling

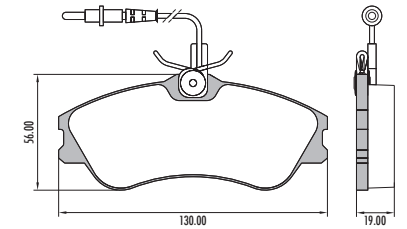

PD/405-E
WVA 21674 | FMSI 8342 D1221 | Girling System / Sistema Girling

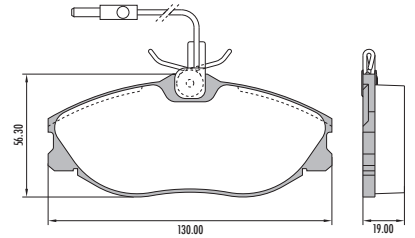

PD/1462
WVA 25187/ 25188/ 25189 | FMSI 8615 D1447

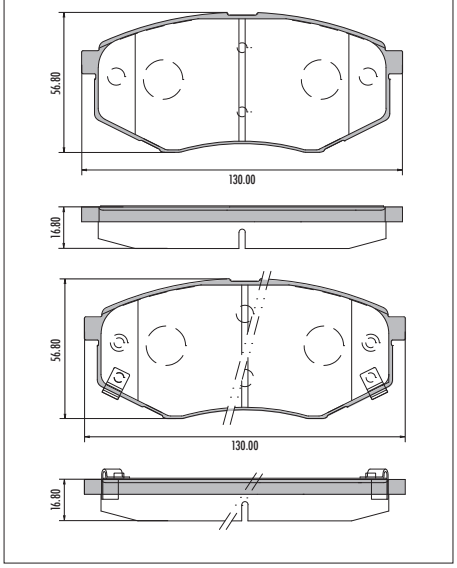

PD/1092
WVA 23966 / 23987 / 23988 | FMSI 8505 D1397 | Mando System / Sistema Mando

SHIM/ANTIRRUIDO

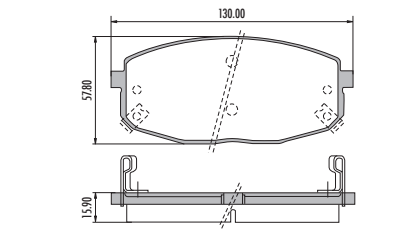

INNER
INTERNA

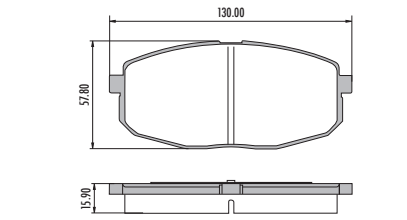

OUTER
EXTERNA

PD/483-A
WVA 21147 | FMSI 7469 D590 | Girling System / Sistema Girling

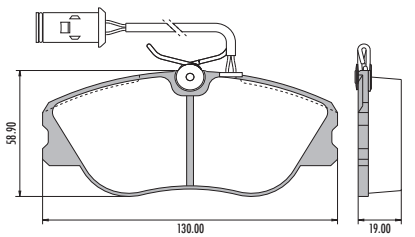

PD/484-A
WVA 21383 | Girling System / Sistema Girling

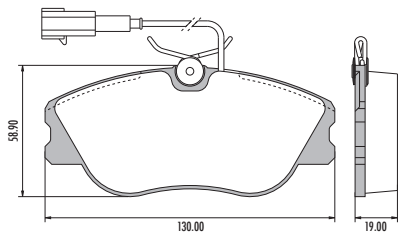

PD/1053
WVA 21923 | FMSI 7712 D837

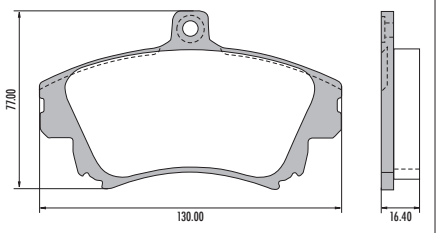

PD/136
FMSI 7170 D265 | Sumitomo System / Sistema Sumitomo

SHIM/ANTIRRUIDO

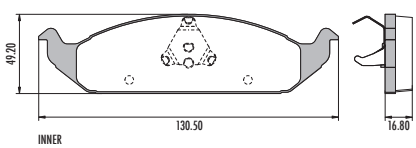

INNER
INTERNA

PD/1385

WVA 23340 / 23341 / 23342
FMSI 8674 D1475

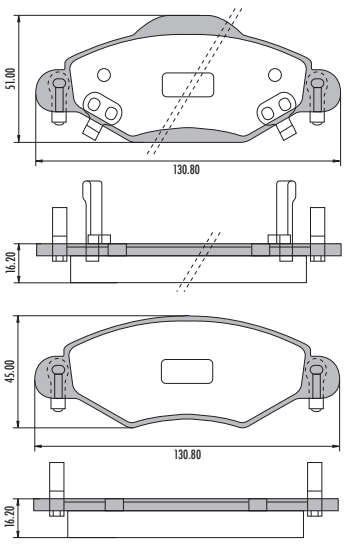

PD/1096

WVA 21978 / 21979 / 21980 / 21981
FMSI 8254 D1499

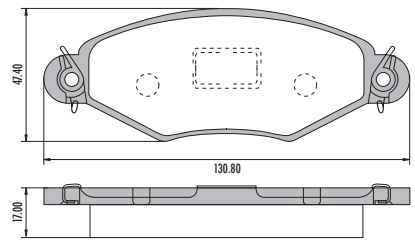

PD/412-B

Bendix System
Sistema Bendix

SHIM/ANTIRRUIDO

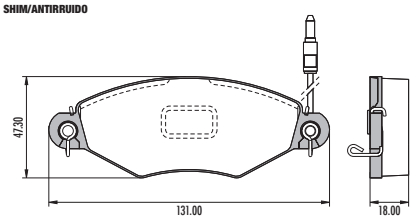

PD/435

WVA 23597
FMSI 8254 D1143

Bosch System
Sistema Bosch

SHIM/ANTIRRUIDO

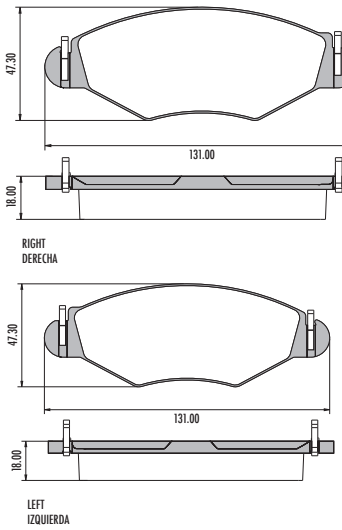

PD/454-E

WVA 21507

Bendix System
Sistema Bendix

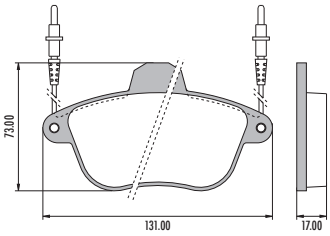

PD/1477-E

WVA 24134/ 24135

Girling System
Sistema Girling

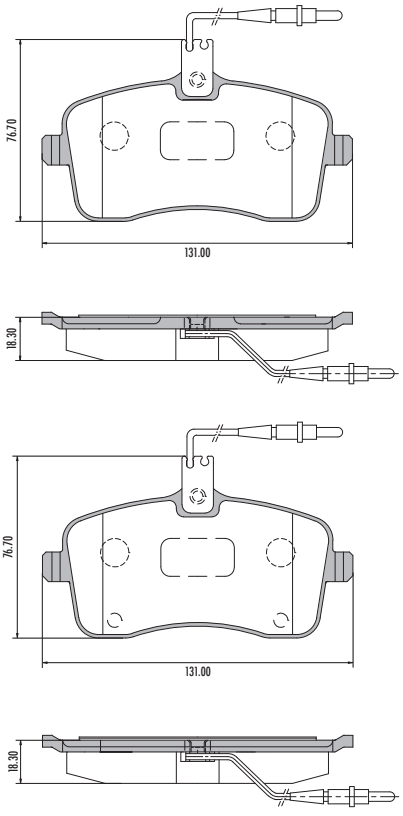

PD/507

WVA 23332

Bosch System
Sistema Bosch

SHIM/ANTIRRUIDO

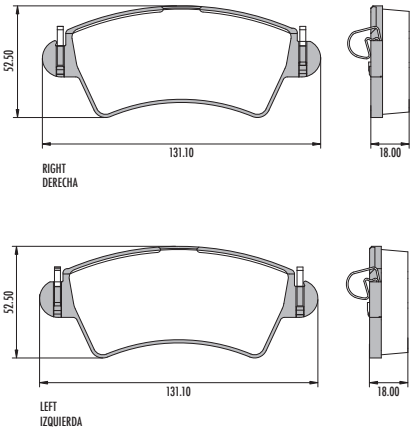

PD/1011

WVA 23144/ 23145
FMSI 7747 D872

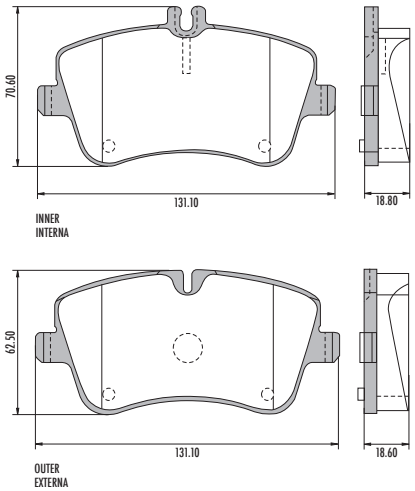

PD/1302

FMSI 8423 D1308

TRW System
Sistema TRW

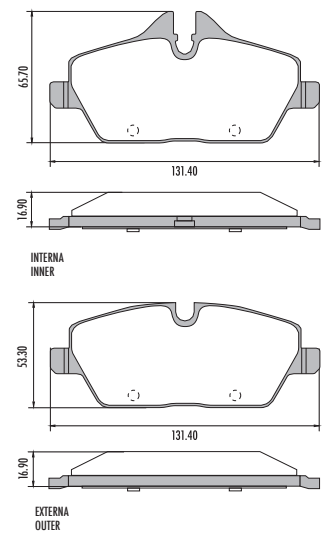

PD/35

WVA 23300

Bendix System
Sistema Bendix

SHIM/ANTIRRUIDO

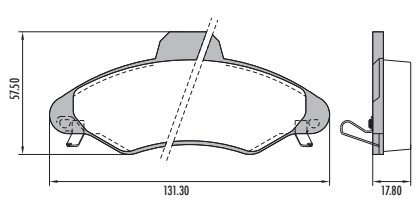

PD/1277

WVA 24375 / 24376
FMSI 8306 D1125

Mando System
Sistema Mando

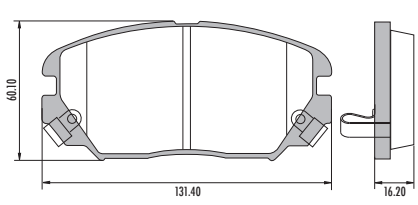

PD/520
WVA 23581 — Lucas System / Sistema Lucas

SHIM/ANTIRRUIDO

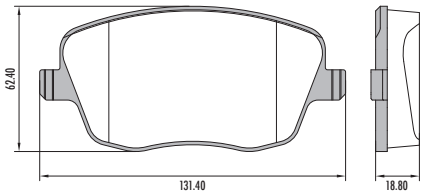

PD/404
WVA 21697 — Sumitomo System / Sistema Sumitomo

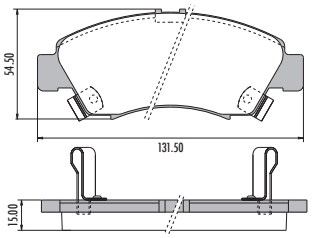

PD/1344
WVA 23881 — Bosch System / Sistema Bosch
FMSI 8466 D1357

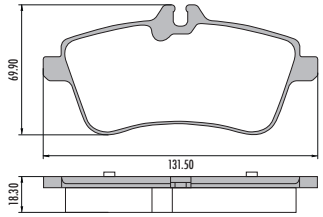

PD/1425
WVA 23619
FMSI 8865 D1638

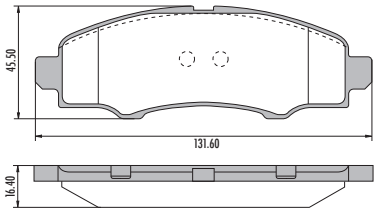

PD/610
WVA 21755
FMSI 7515 D637

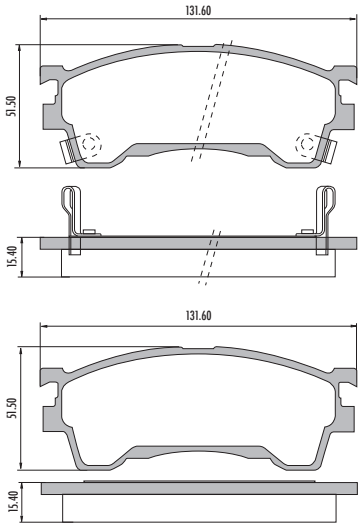

PD/46
WVA 23226 — TRW System / Sistema TRW
FMSI 8290 D1176

SHIM/ANTIRRUIDO

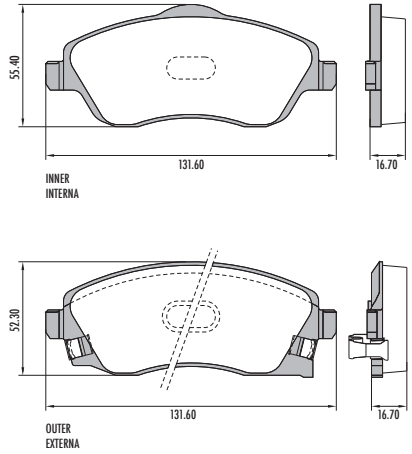

PD/1049
FMSI 7624 D755

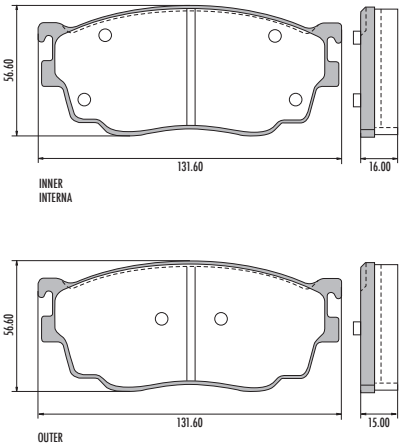

PD/491
WVA 23766 — TRW System / Sistema TRW
FMSI 8335 D1215

SHIM/ANTIRRUIDO

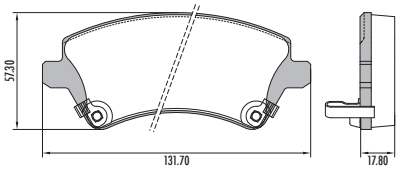

PD/745
WVA 23928
FMSI 7787 D908

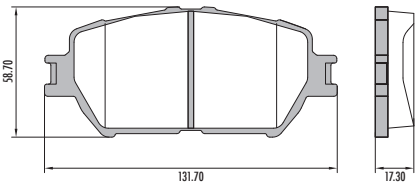

PD/635
WVA 23891 / 23892 / 23893 — Akebono System / Sistema Akebono
FMSI 7825 D924

SHIM/ANTIRRUIDO

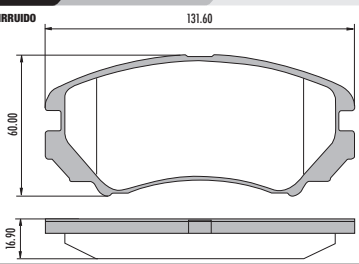

PD/1288
WVA 23984
FMSI 8324 D1204

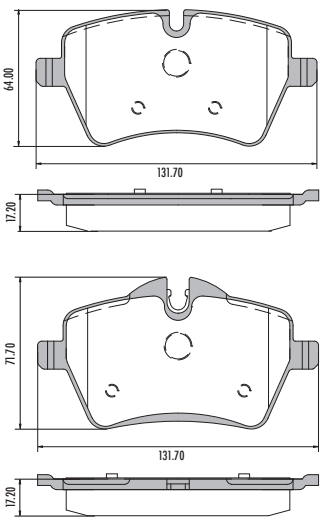

PD/1409

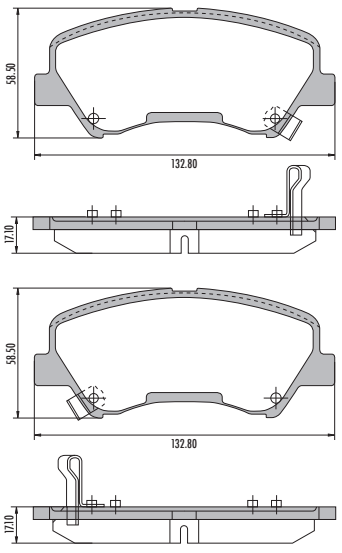

PD/1469
FMSI 8903 D1674

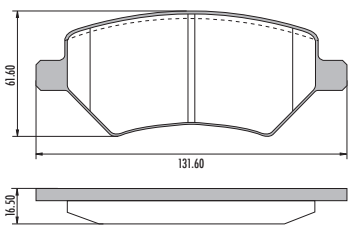

PD/1343

FMSI 8549 D1432

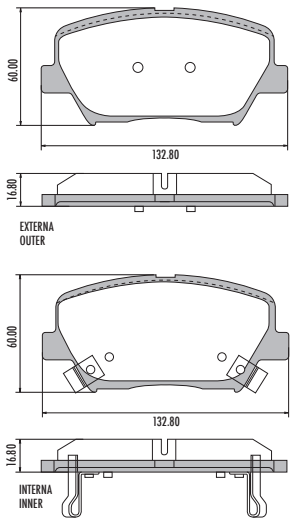

PD/1364

WVA 25268 / 25269 / 25270
FMSI 8801 D1590

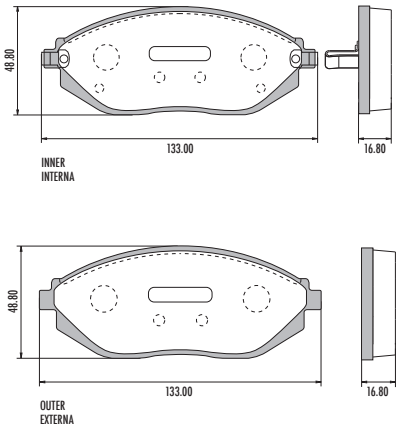

PD/1348

FMSI 8751 D1543

Mando System
Sistema Mando

SHIM/ANTIRRUIDO

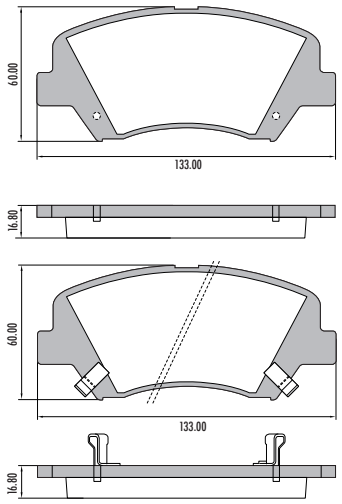

PD/818

WVA 23974
FMSI 8385 D1269

Akebono System
Sistema Akebono

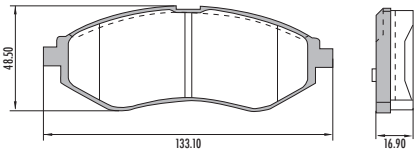

PD/387

WVA 21601
FMSI 7441 D695 - 7441 D562

Akebono System
Sistema Akebono

SHIM/ANTIRRUIDO

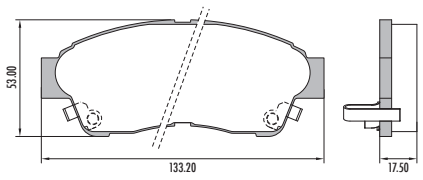

PD/333

WVA 20002 /20191 /20192

Akebono System
Sistema Akebono

SHIM/ANTIRRUIDO

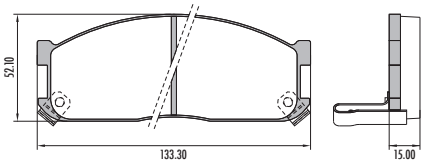

PD/392

FMSI 7438B D641

Kelsey Hayes System
Sistema Kelsey Hayes

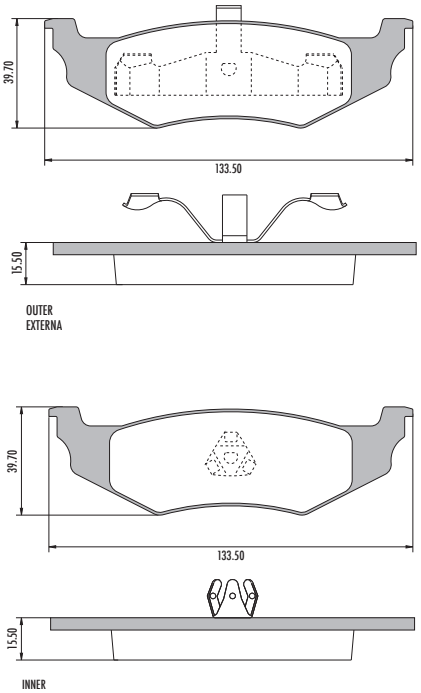

PD/701

FMSI 7438A D658

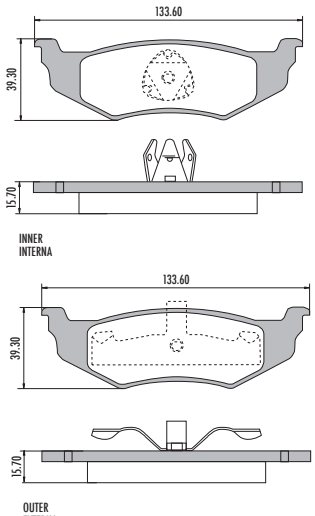

PD/1480

WVA 25698/ 25699/ 25700

Girling System
Sistema Girling

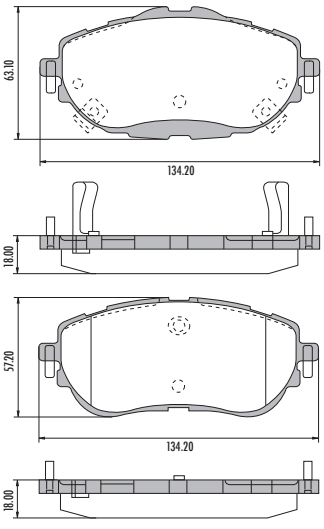

PD/479

WVA 23022
FMSI 8371 D1253

Bosch System
Sistema Bosch

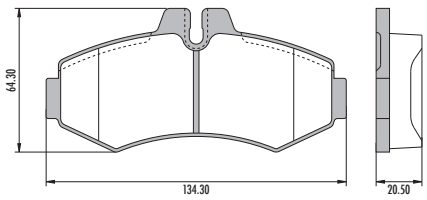

PD/528

WVA 24024 / 24025 / 24026
FMSI 7877 D976

Sumitomo System
Sistema Sumitomo

SHIM/ANTIRRUIDO

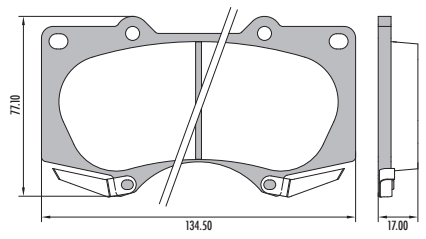

PD/1074

FMSI 8225 D1119

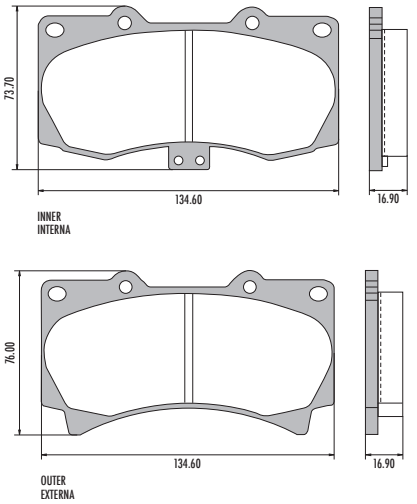

PD/1475

FMSI 8517 D987

Bosch System
Sistema Bosch

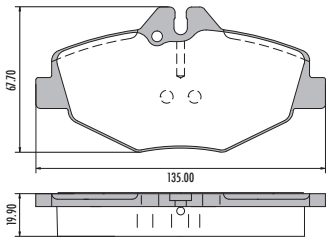

PD/493

WVA 21694
FMSI 7497 D621

Akebono System
Sistema Akebono

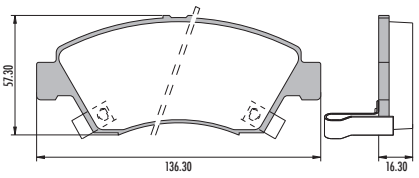

PD/1052

WVA 23178 / 23179
FMSI 7702 D829

Akebono System
Sistema Akebono

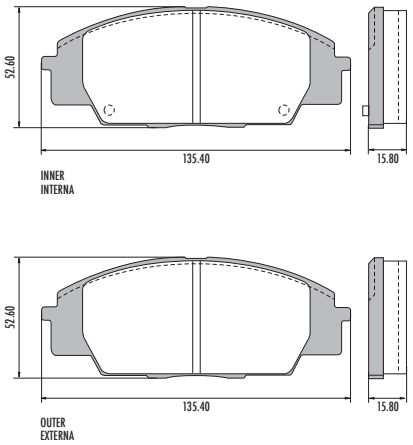

PD/638

WVA 24056
FMSI 7870 D969

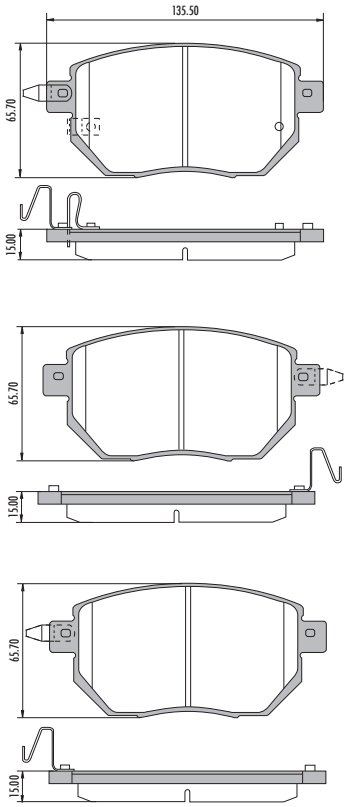

PD/1492

FMSI 8502 D1394

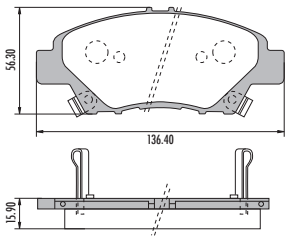

PD/647

WVA
FMSI 8277 D1164

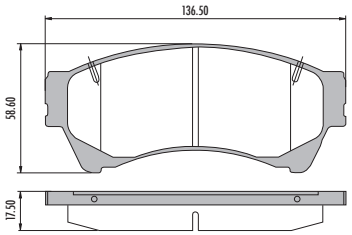

PD/816

FMSI 8277 D1192

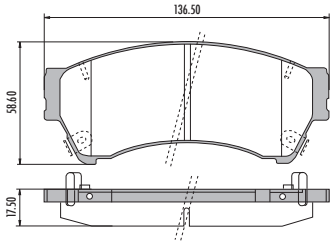

PD/694

FMSI 7478 D600

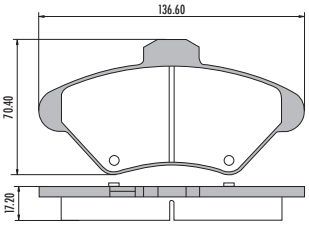

PD/346

WVA 23600
FMSI 8749 D1541

Girling System
Sistema Girling

SHIM/ANTIRRUIDO

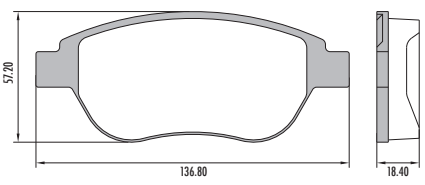

PD/1371

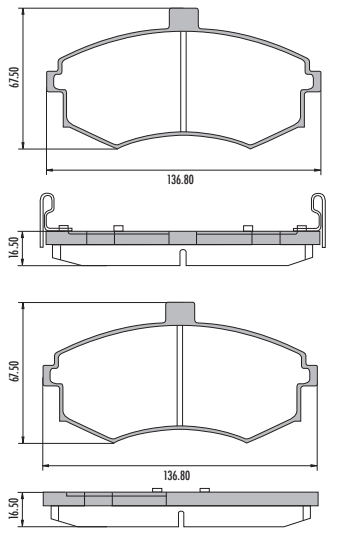

PD/601

WVA 23930

Bosch System
Sistema Bosch

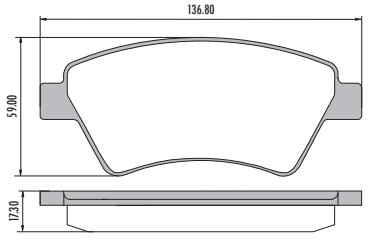

PD/343

WVA 23518 / 23520

Sumitomo System
Sistema Sumitomo

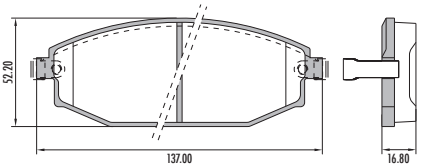

PD/706
WVA 21725
FMSI 7329 D700

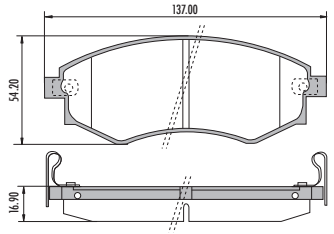

PD/511

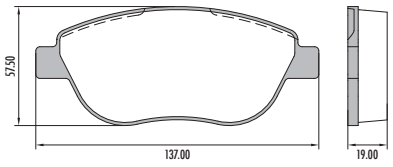

PD/511-B
WVA 23708 / 23709 / 23710
Bosch System
Sistema Bosch

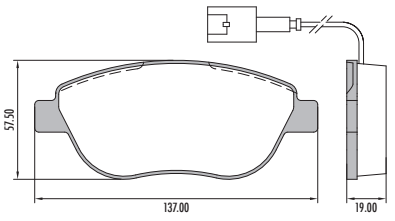

PD/663
WVA 29190
FMSI 8431 D1317

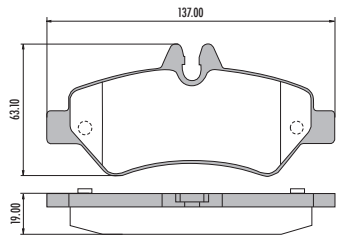

PD/752
FMSI 7843 D941

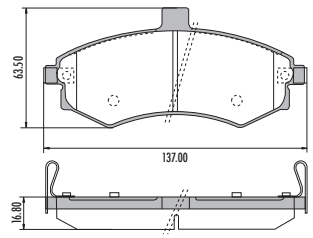

PD/505
WVA 23954 / 23599
FMSI 8333 D1213 - 8779 D1570
Bosch System
Sistema Bosch

SHIM/ANTIRRUIDO

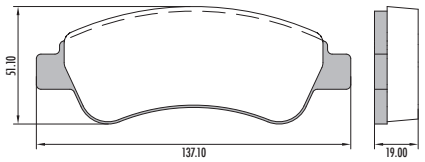

PD/749
FMSI 7830 D929

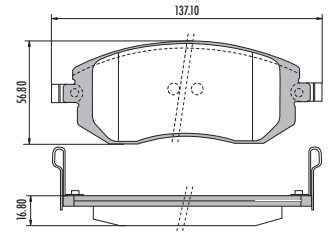

PD/669
FMSI 8780 D1571

SHIM/ANTIRRUIDO

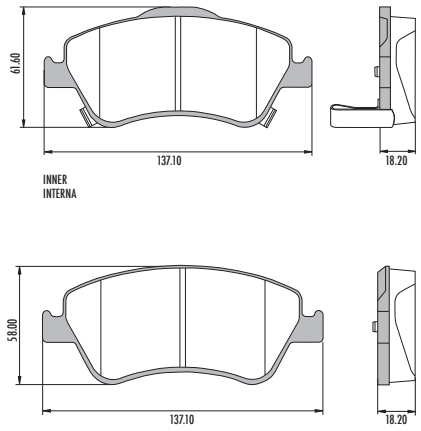

PD/550
WVA 21561
FMSI 7318 D430

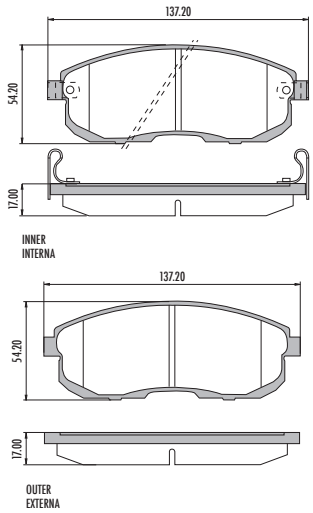

PD/453
WVA 21527
FMSI 7342 D462
Akebono System
Sistema Akebono

SHIM/ANTIRRUIDO

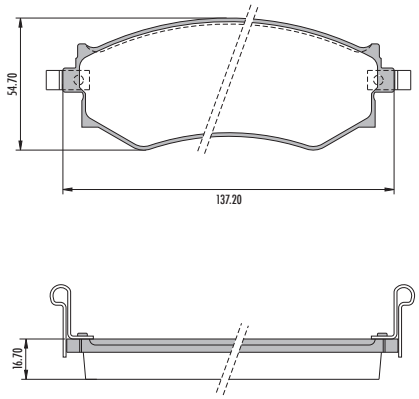

PD/1404
FMSI 8791 D1578

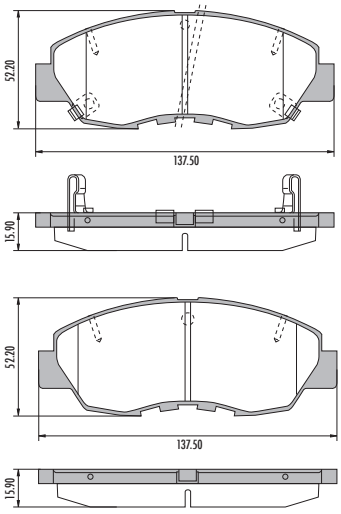

PD/563
WVA 21497
FMSI 7573 D465
Akebono System
Sistema Akebono

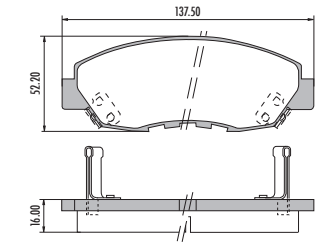

PD/728
FMSI 7783 D815

SHIM/ANTIRRUIDO

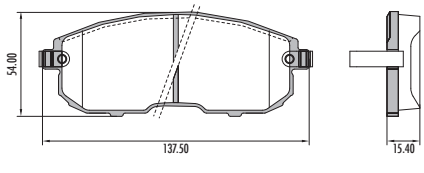

PD/727
FMSI 7318 D815

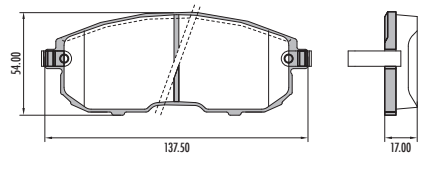

PD/700
FMSI 7318 D653

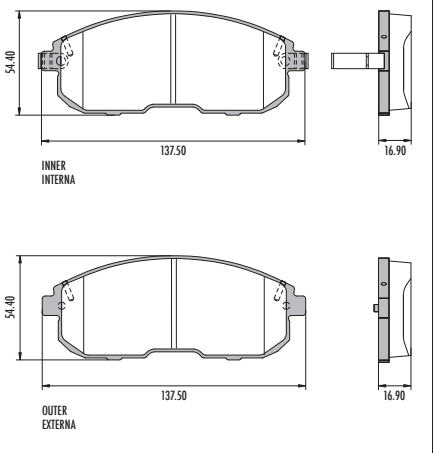

PD/388
WVA 21879
FMSI 7448 D568
Akebono System
Sistema Akebono

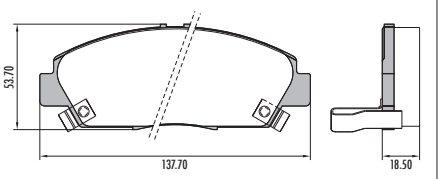

PD/738
FMSI 7760 D883

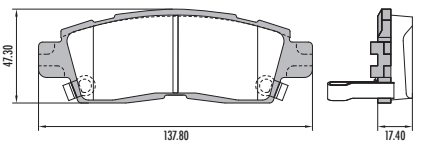

PD/445
WVA 21845
FMSI 7585 D579
Sumitomo System
Sistema Sumitomo

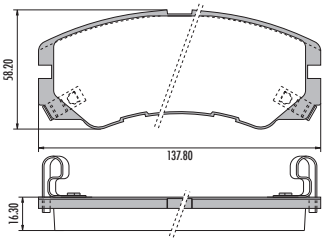

PD/1296
WVA 24501
FMSI 8614 D1295
Mando System
Sistema Mando

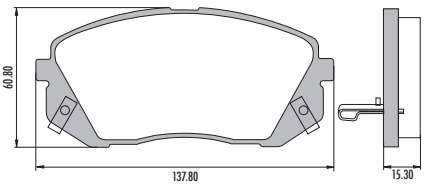

PD/495
WVA 20887
FMSI 7183 D280
Kelsey Hayes System
Sistema Kelsey Hayes

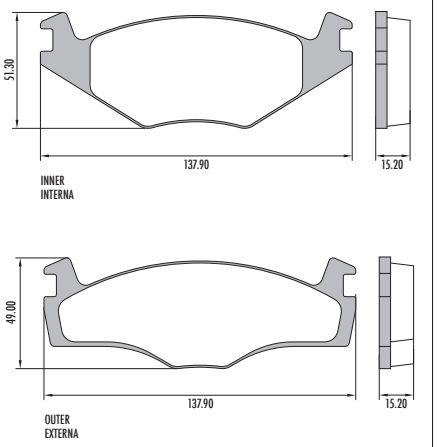

PD/328
WVA 20887
FMSI 7209 D569
Kelsey Hayes System
Sistema Kelsey Hayes

SHIM/ANTIRRUIDO

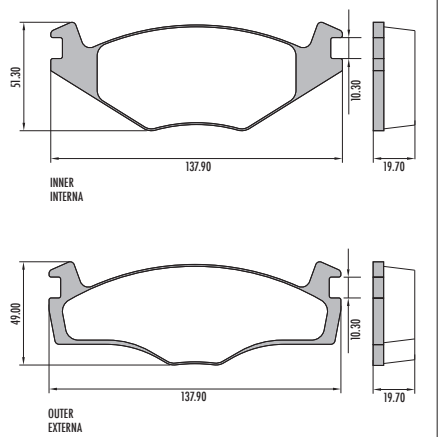

PD/614
WVA 23780
FMSI 7590 D722
Akebono System
Sistema Akebono

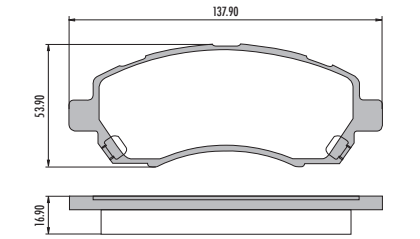

PD/717
FMSI 7632 D764
Akebono System
Sistema Akebono

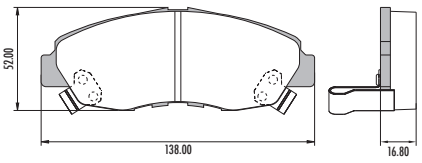

PD/397
WVA 21497
FMSI 7345 D465
Akebono System
Sistema Akebono

SHIM/ANTIRRUIDO

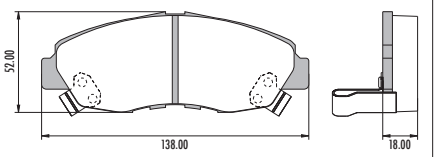

PD/613
WVA 23558 / 21915
FMSI 7589 D721
Akebono System
Sistema Akebono

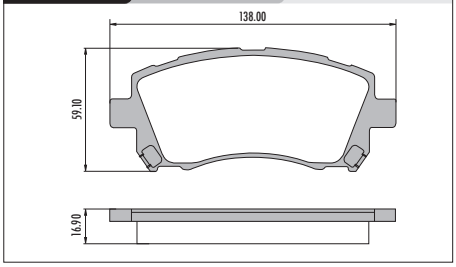

PD/1365
WVA 24724/ 24725/ 24726
FMSI 8804 D1592

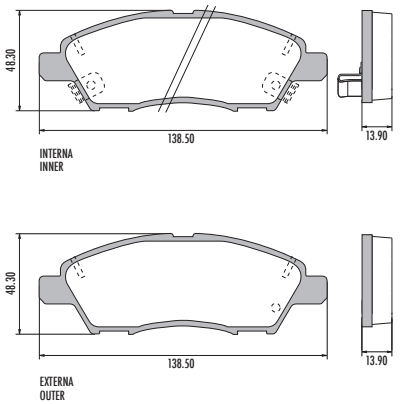

PD/347
WVA 23613
Bosch System
Sistema Bosch

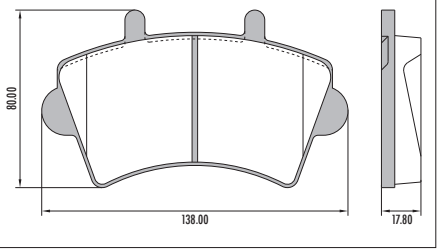

PD/790
FMSI 7761 D884

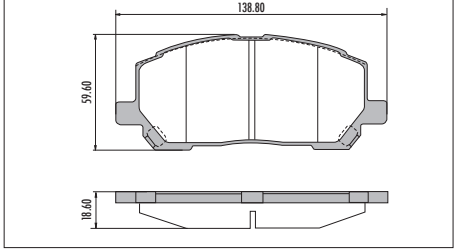

PD/350
WVA 21470
Bendix System
Sistema Bendix

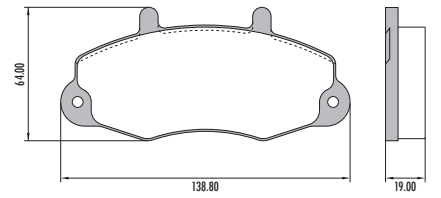

PD/472
WVA 23302
Bendix System
Sistema Bendix

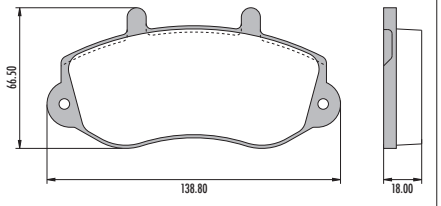

PD/1080
WVA 24544
FMSI 8377 D1258

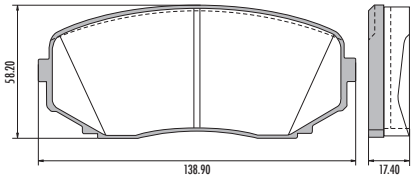

PD/781
FMSI 7430 D551

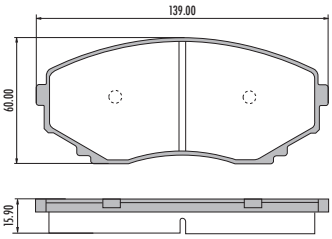

PD/721
FMSI 7663 D793

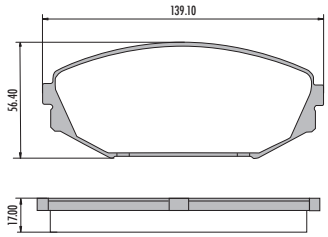

PD/573
WVA 23339
FMSI 7661 D791

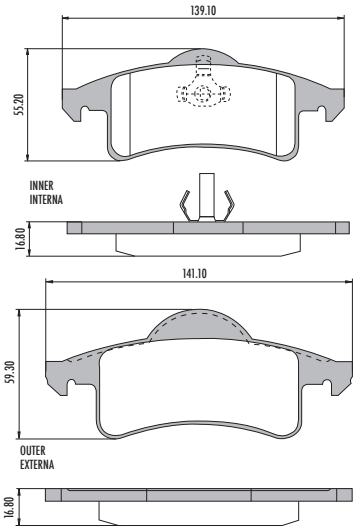

PD/740
WVA 24336
FMSI 8330 D1210

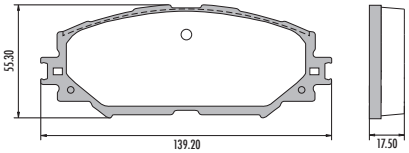

PD/538
WVA 24066
FMSI 7742 D867
Sumitomo System
Sistema Sumitomo

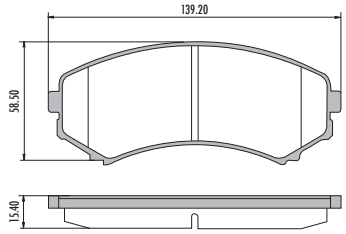

PD/185
FMSI 8382 D1265

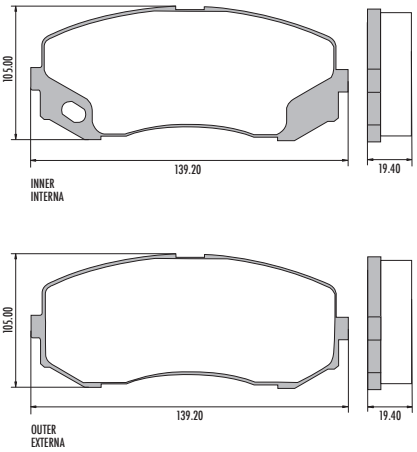

PD/351
WVA 21469
Bendix System
Sistema Bendix

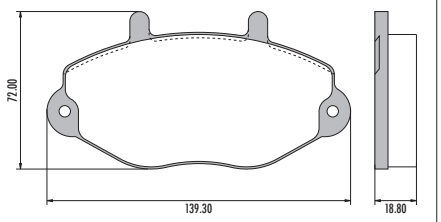

PD/751
FMSI 7838 D935

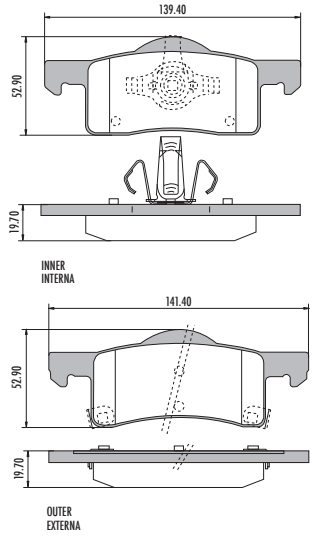

PD/1473
WVA 23309/ 23310/ 24495
FMSI 7820 D919

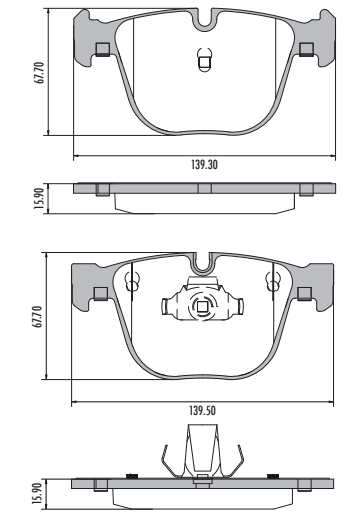

PD/109
Varga System
Sistema Varga

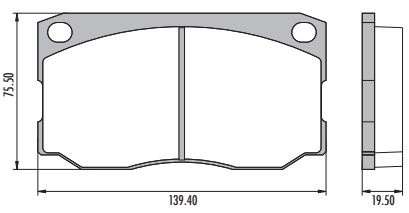

PD/102
FMSI 8321 D1201
Varga System
Sistema Varga

SHIM/ANTIRRUIDO

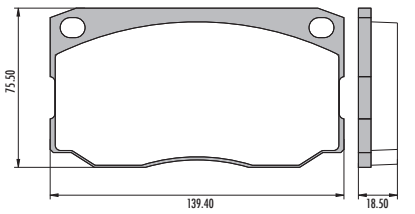

PD/175

WVA 29747 — Knorr System / Sistema Knorr

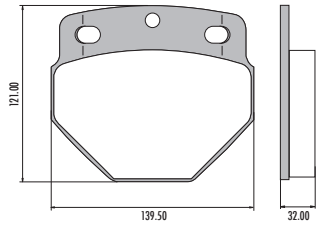

PD/176

WVA 29969 — Knorr System / Sistema Knorr

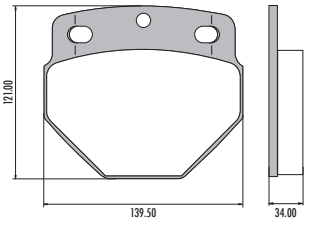

PD/448-A

WVA 23040 / 23041 / 23042 — Bendix System / Sistema Bendix

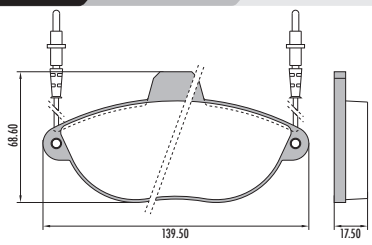

PD/754

FMSI 7851 D952

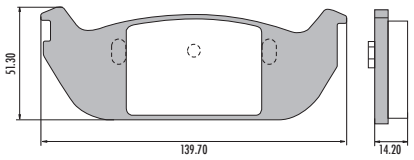

PD/1394

WVA 25246
FMSI 8731 D1523

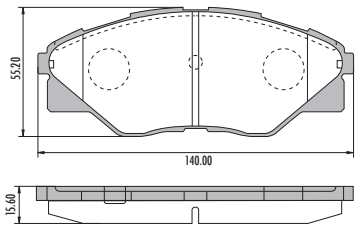

PD/1483

WVA 25702 / 25703

SHIM/ANTIRRUIDO

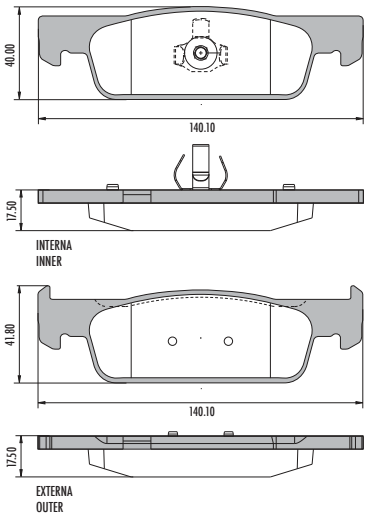

PD/410

WVA 23627
FMSI 7545A D667
Kelsey Hayes System / Sistema Kelsey Hayes

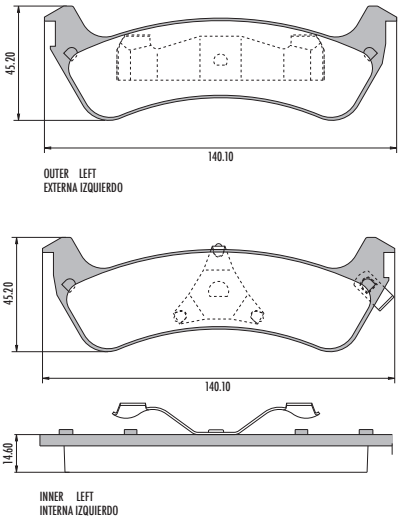

PD/55

WVA 21202
FMSI 8316 D1196
Teves System / Sistema Teves

SHIM/ANTIRRUIDO

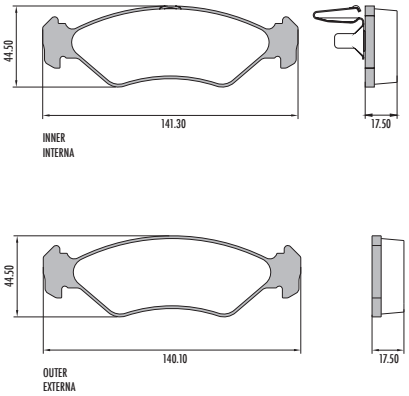

PD/82

Teves System / Sistema Teves

SHIM/ANTIRRUIDO

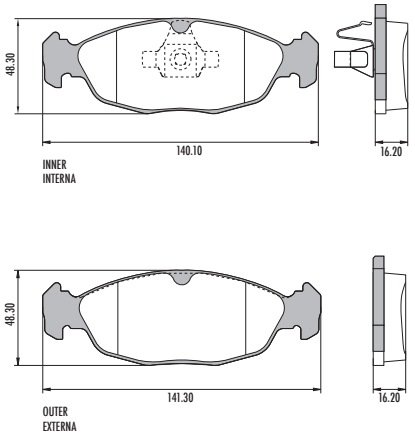

PD/91

Teves System / Sistema Teves

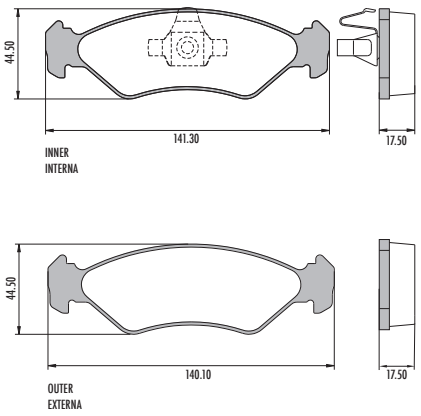

PD/42

WVA 20547 / 21353
FMSI 7563 D688
Teves System
Sistema Teves

SHIM/ANTIRRUIDO

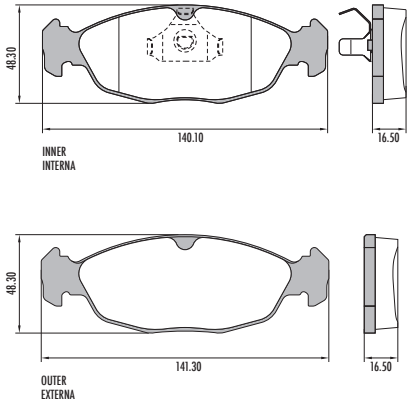

PD/364-A

WVA 21430
Teves System
Sistema Teves

SHIM/ANTIRRUIDO

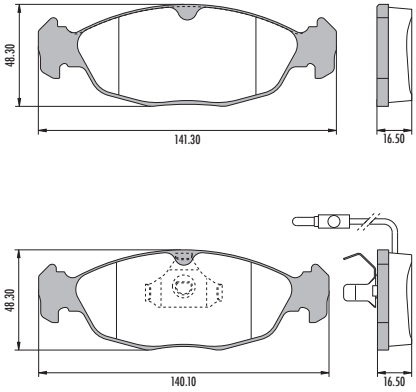

PD/797

FMSI 7899 D998

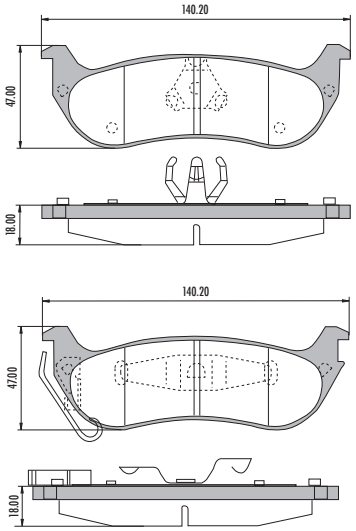

PD/1012-B

WVA 23190
FMSI 7750 D875

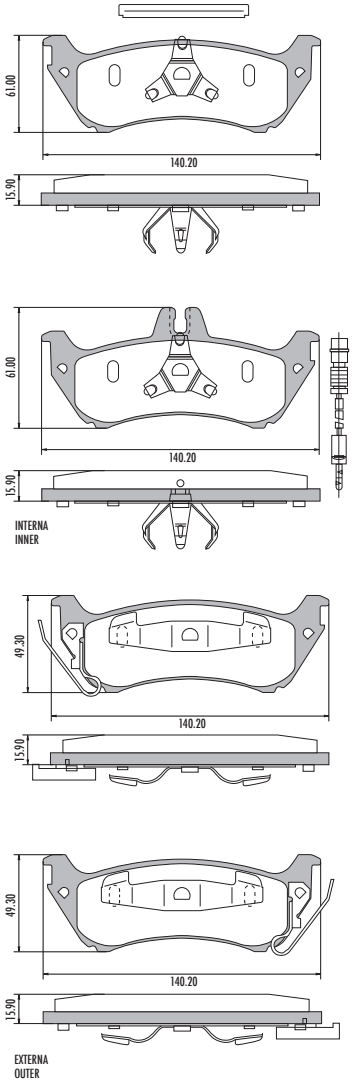

PD/1357

FMSI 8698 D1498

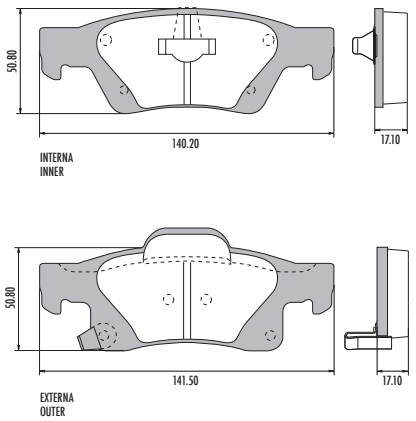

PD/1058

FMSI 7841 D939

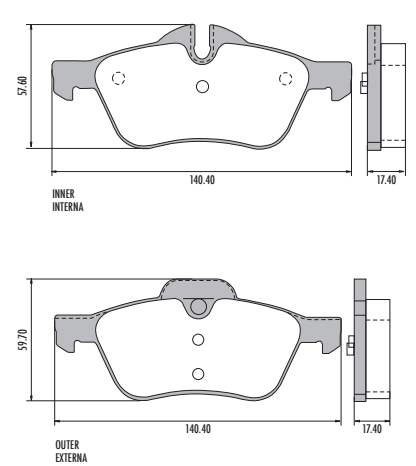

PD/560

FMSI 7543 D664

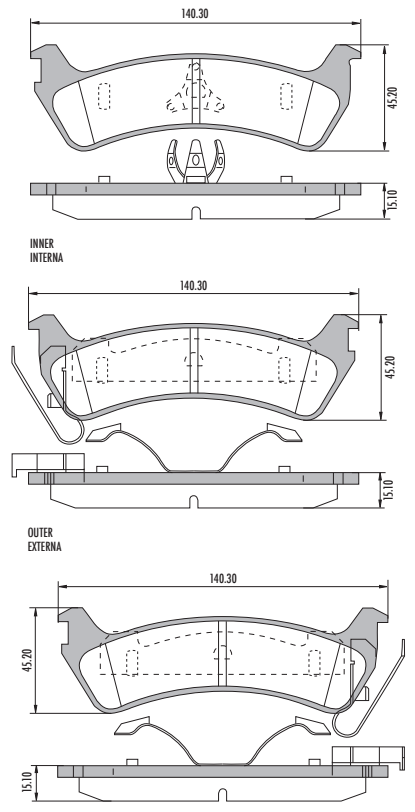

PD/519
FMSI 7265 D376

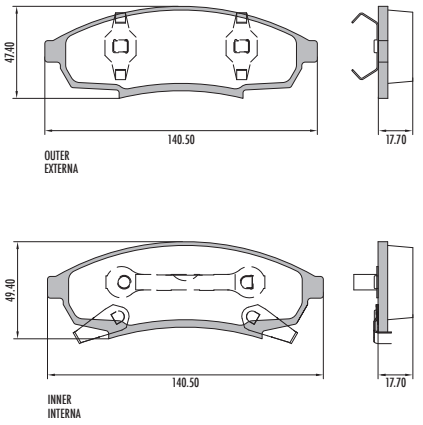

PD/588
FMSI 7863 D981

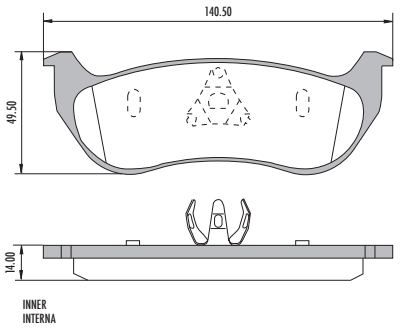

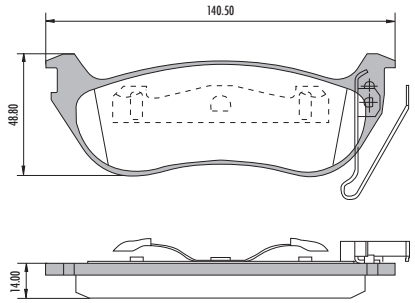

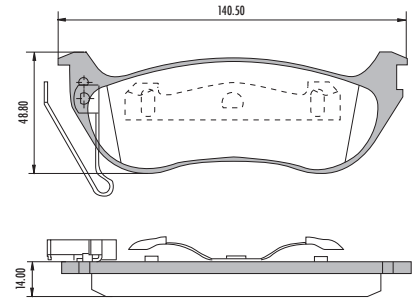

PD/498-A
WVA 23917
FMSI 8318 D1198
Brembo System
Sistema Brembo

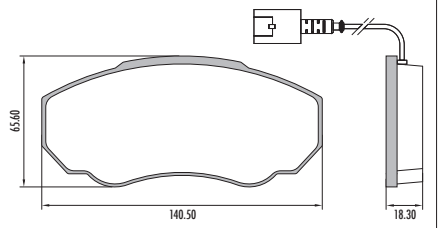

PD/736
FMSI 7907 D881

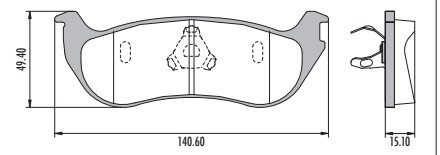

PD/775
FMSI 7863 D964

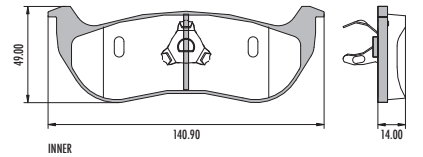

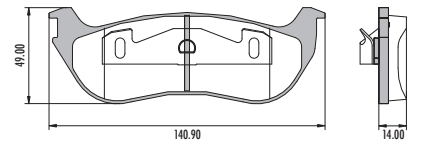

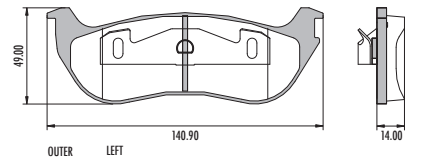

PD/1497

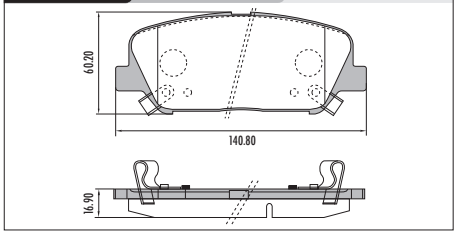

PD/1512

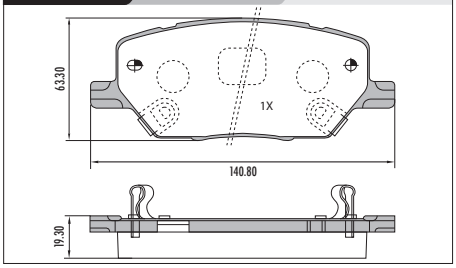

PD/686
FMSI 7357 D476

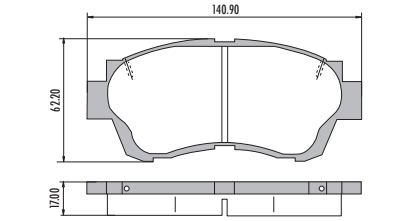

PD/705
FMSI 7610 D674

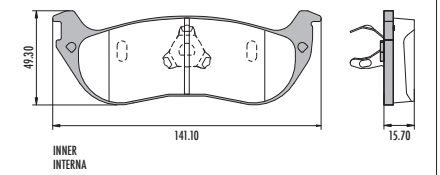

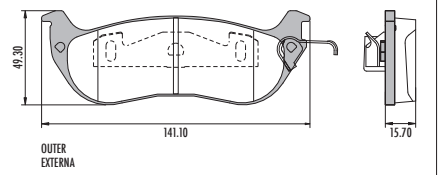

PD/764
FMSI 7906 D1005

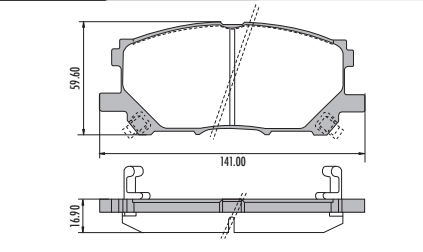

PD/1428
FMSI 8875 D1647

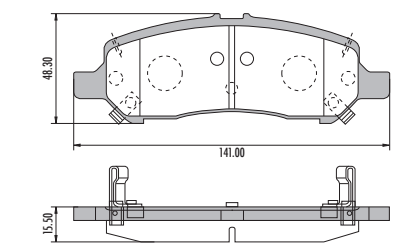

PD/704

FMSI 7555 D674

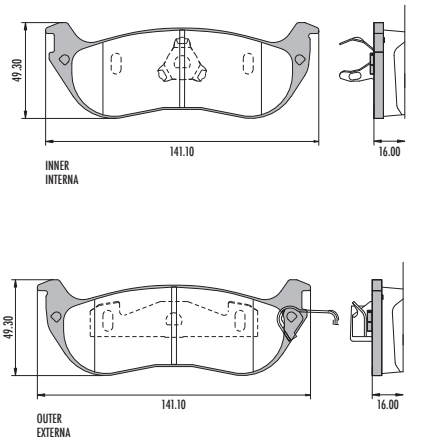

PD/1399

WVA 24739 / 24740
FMSI 8753 D1545

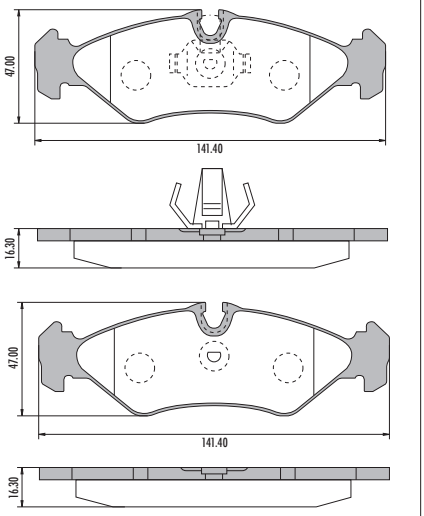

PD/659-A

WVA 21621
FMSI 7850 D951
Teves System
Sistema Teves

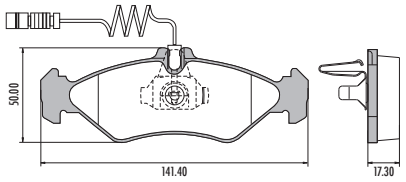

PD/190

WVA 29232
Brembo System
Sistema Brembo

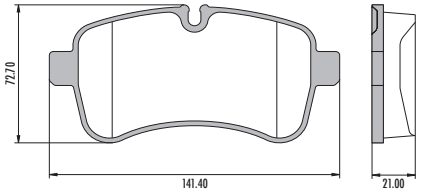

PD/644

WVA 23868 / 23869
FMSI 7795 D914
Akebono System
Sistema Akebono

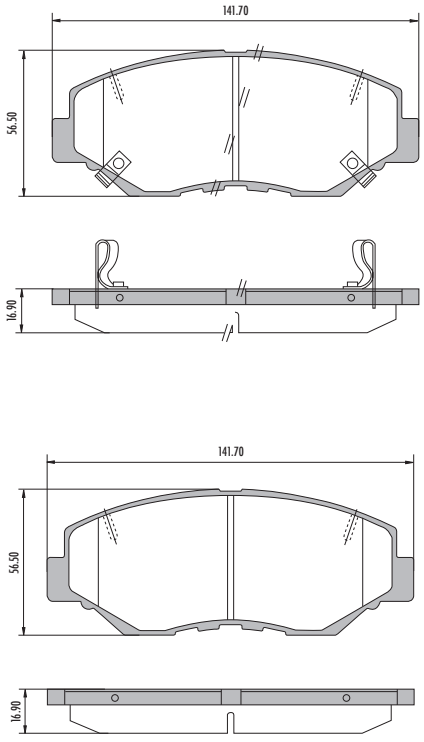

PD/1419

WVA 25564
FMSI 8836 D1623

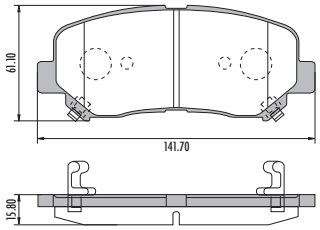

PD/1426

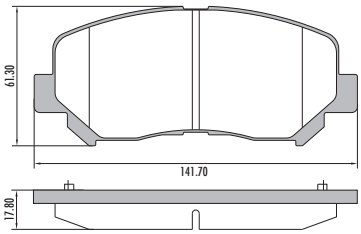

PD/368

WVA 21866
FMSI 7569 D694
Teves System
Sistema Teves

SHIM/ANTIRRUIDO

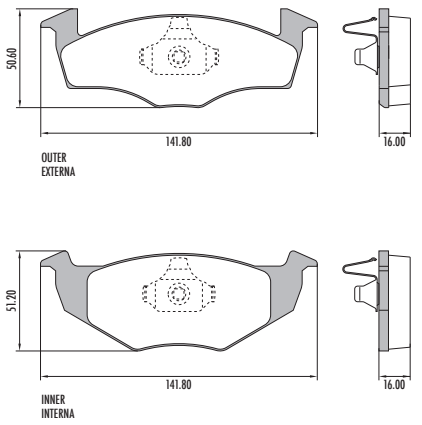

PD/367

WVA 21866
FMSI 7569 D694 - 8702 D694
Teves System
Sistema Teves

SHIM/ANTIRRUIDO

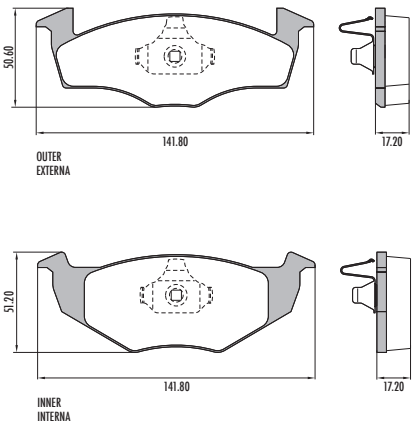

PD/1100

FMSI 8768 D1556
Teves System
Sistema Teves

SHIM/ANTIRRUIDO

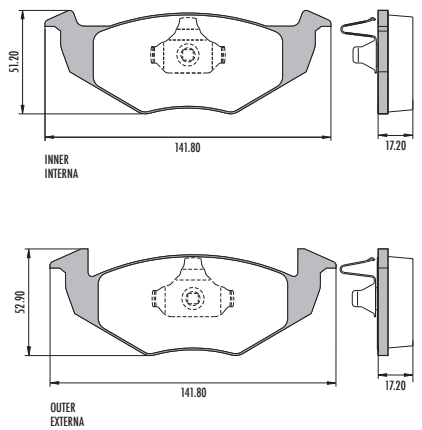

PD/785

FMSI 7520 D643

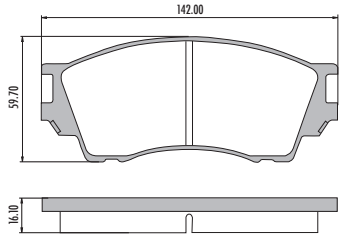

PD/566
FMSI 7584 D711

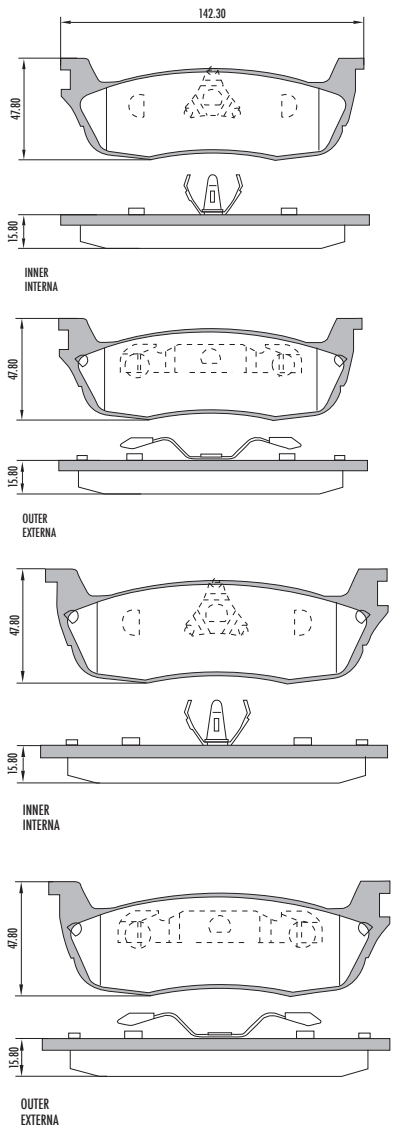

PD/679
FMSI 7082C D199

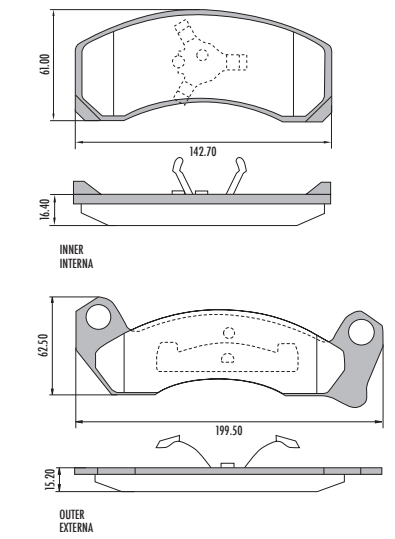

PD/1347
WVA 23974 / 25295 / 25296
Kadac System
Sistema Kadac

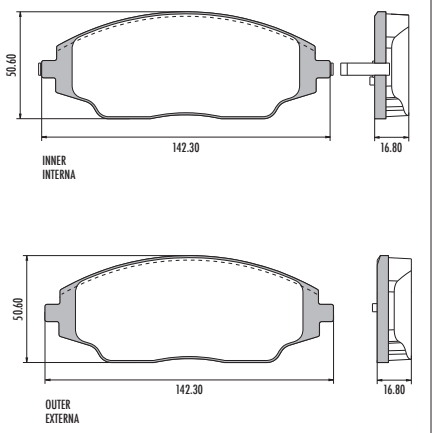

PD/802
FMSI 7945 D1041
Kelsey Hayes System
Sistema Kelsey Hayes

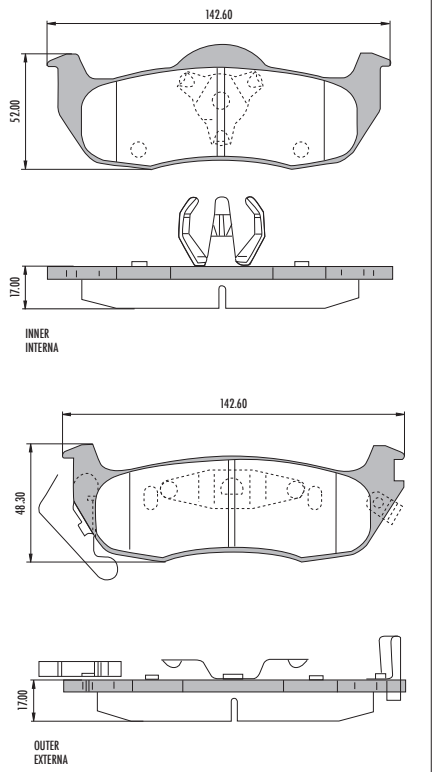

PD/731
FMSI 8312 D1194

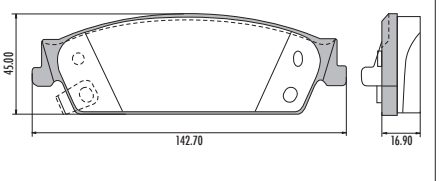

PD/615
FMSI 7596 D729

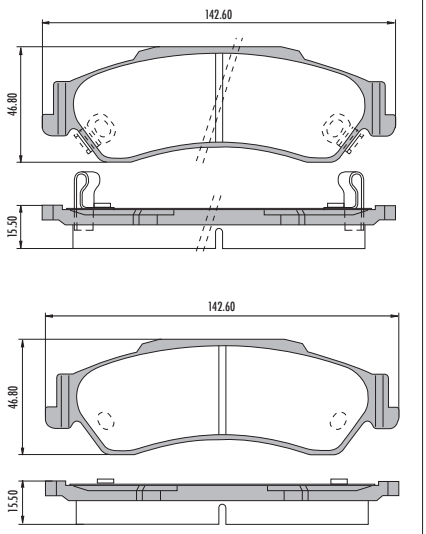

PD/429
WVA 21158
FMSI 7205 D303
Akebono System
Sistema Akebono

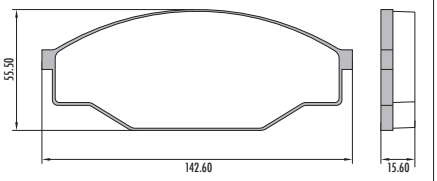

PD/556
FMSI 7502A D666

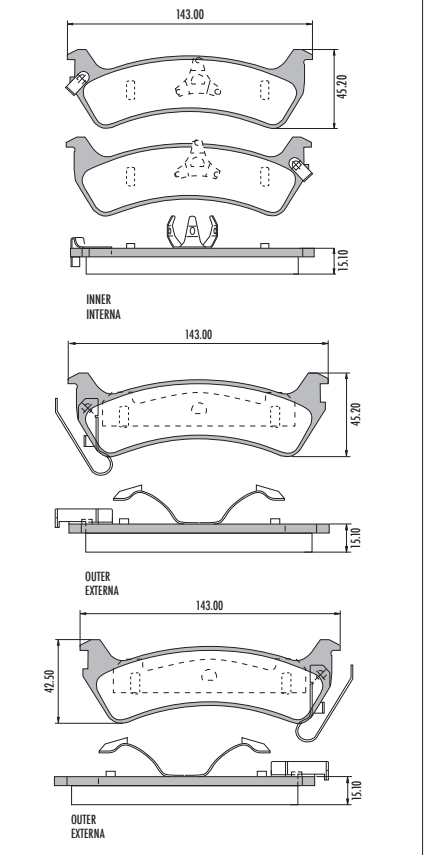

PD/817
WVA 24062 / 24063 / 24064 / 23234
FMSI 7779 D1035
Akebono System
Sistema Akebono

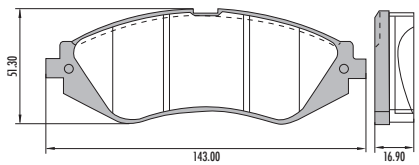

PD/720
FMSI 7700 D792

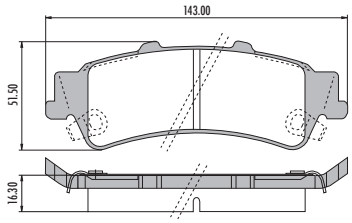

PD/574
FMSI 7662 D792

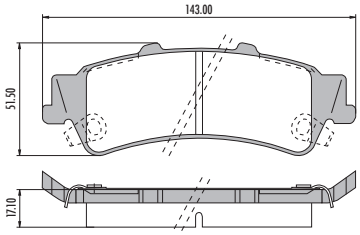

PD/475
WVA 23234
FMSI 7667 D797
Akebono System
Sistema Akebono

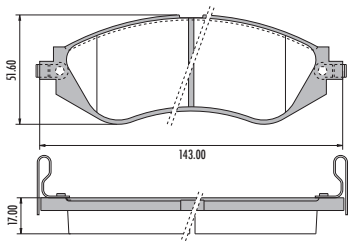

PD/743
WVA 23855
FMSI 7785 D906

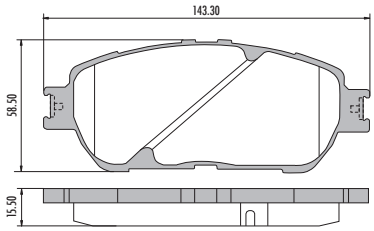

PD/1089
FMSI 8487 D1376

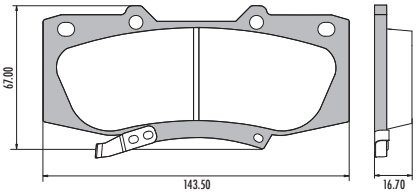

PD/1098
FMSI 8776 D1567
SHIM/ANTIRRUIDO

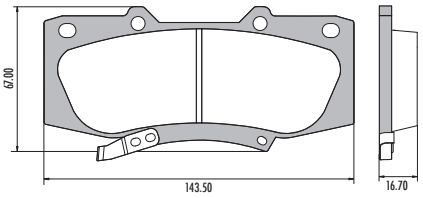

PD/1084
FMSI 8419 D1303

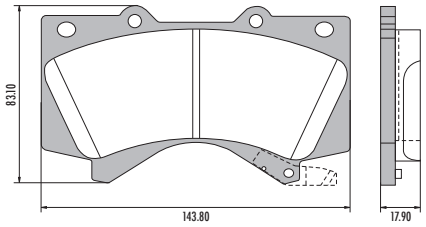

PD/784
FMSI 7495 D619

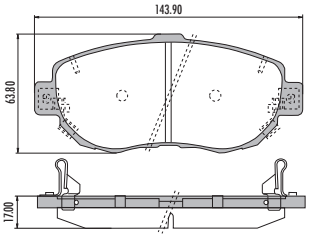

PD/733

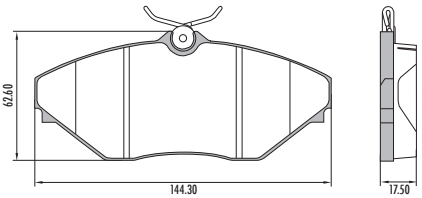

PD/672
FMSI 8456 D1345
SHIM/ANTIRRUIDO

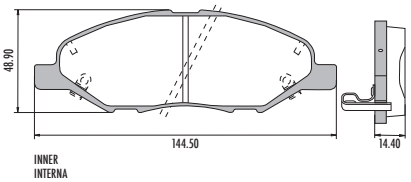

INNER
INTERNA

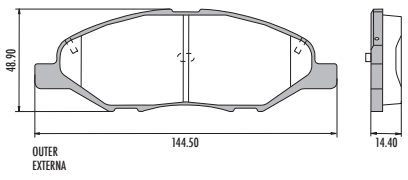

OUTER
EXTERNA

PD/1034
FMSI 7306 D419

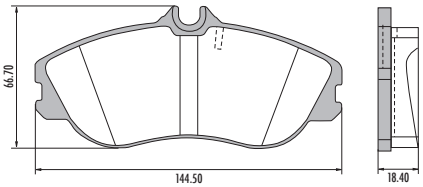

PD/702
FMSI 7537 D659

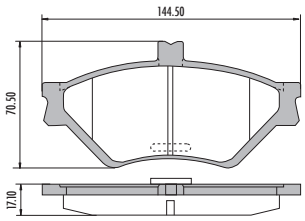

PD/358
WVA 21797
Girling System
Sistema Girling

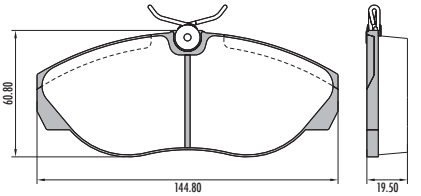

PD/358-A
WVA 21798
Girling System
Sistema Girling

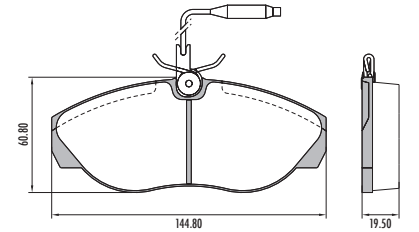

PD/369-B
WVA 23602
Girling System
Sistema Girling

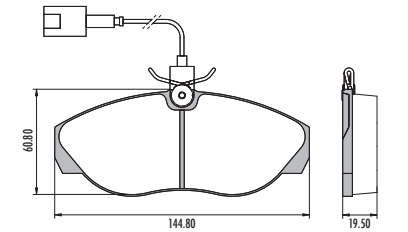

PD/631
WVA 23584
FMSI 7741 D866
Sumitomo System
Sistema Sumitomo
SHIM/ANTIRRUIDO

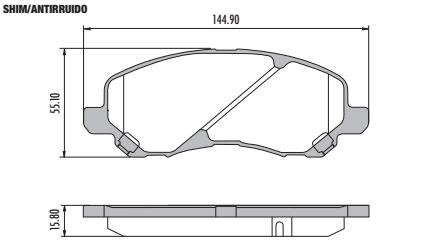

PD/734
FMSI 8338 D866

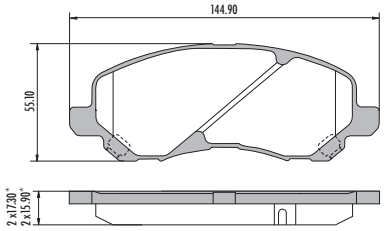

PD/1387
WVA 23099
FMSI 8699 D1500

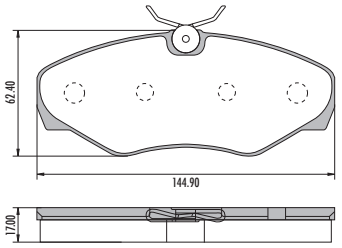

PD/1353
FMSI 8402 D1285
Akebono System
Sistema Akebono

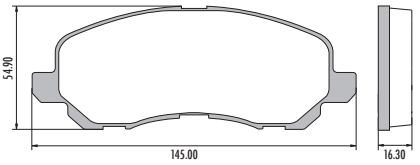

PD/1075
FMSI 8226 D1120

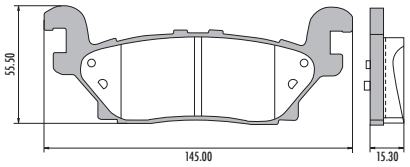

INNER
INTERNA

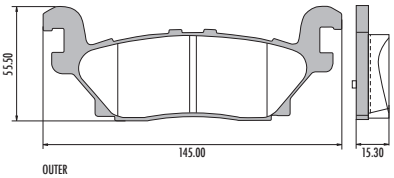

OUTER
EXTERNA

PD/446
WVA 21410 / 21481
Girling System
Sistema Girling

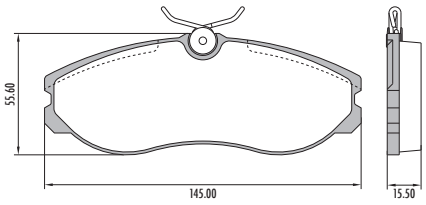

PD/1358
FMSI 8455 D1344
Akebono System
Sistema Akebono

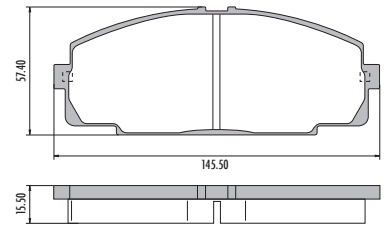

PD/114
Varga System
Sistema Varga

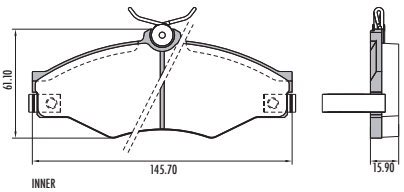

INNER
INTERNA

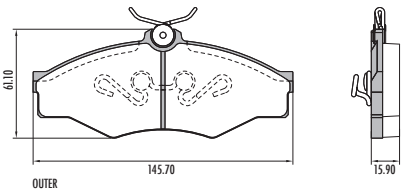

OUTER
EXTERNA

PD/107
Varga System
Sistema Varga

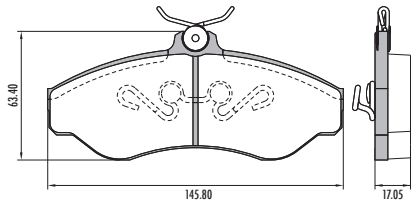

PD/1346
Teves System
Sistema Teves

SHIM/ANTIRRUIDO

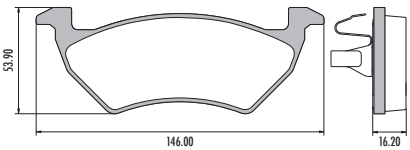

INNER
INTERNA

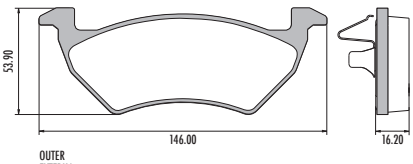

OUTER
EXTERNA

PD/58
WVA 21974 / 23130
FMSI 7860 D768
Teves System
Sistema Teves

SHIM/ANTIRRUIDO

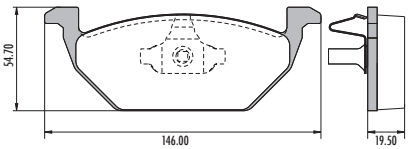

INNER
INTERNA

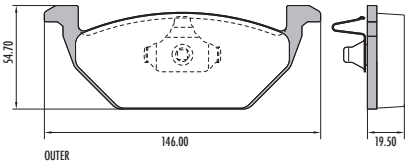

OUTER
EXTERNA

PD/58-B
WVA 23187 / 23131
FMSI 7709 D768
Teves System
Sistema Teves

SHIM/ANTIRRUIDO

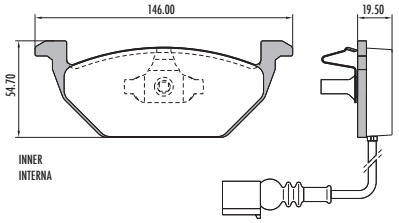

INNER
INTERNA

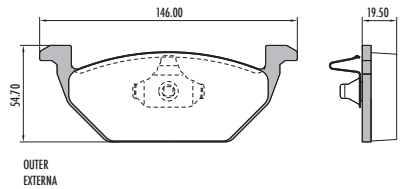

OUTER
EXTERNA

PD/73
WVA 21974
FMSI 7635 D768
Teves System
Sistema Teves

SHIM/ANTIRRUIDO

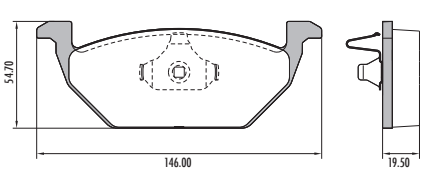

PD/73-B
Teves System
Sistema Teves

SHIM/ANTIRRUIDO

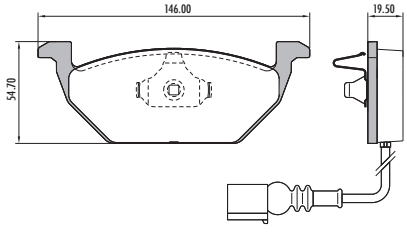

PD/804
FMSI 7961 D1055

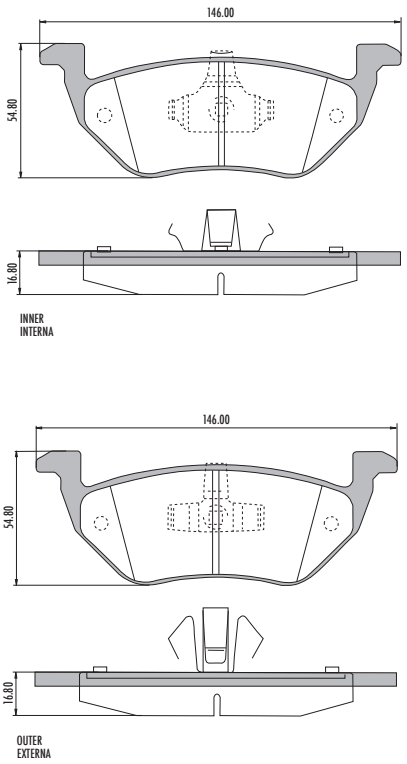

PD/580
WVA 23638
FMSI 7732 D856 - 7988 D856

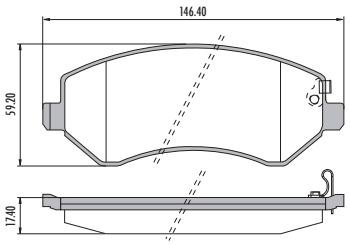

PD/744
WVA 24337
FMSI 8331 D1211

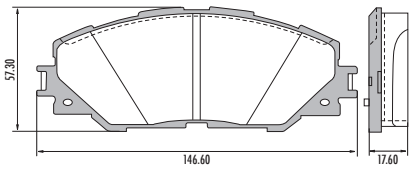

PD/1443-A
WVA 20261/ 20267
Ate System
Sistema Ate

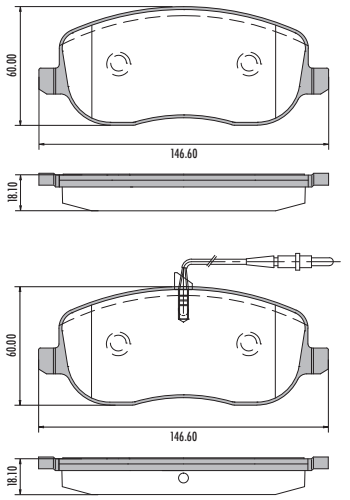

PD/1026
FMSI 8439 D1327
Bosch System
Sistema Bosch

SHIM/ANTIRRUIDO

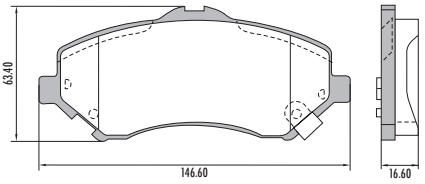

PD/732
FMSI 7720 D844

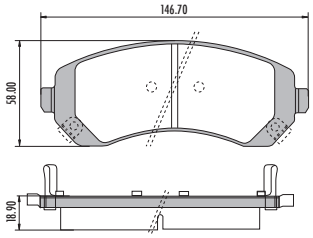

PD/506
FMSI 7385 D506
Kelsey Hayes System
Sistema Kelsey Hayes

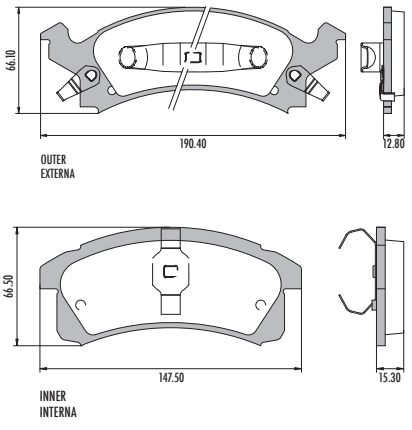

PD/1499

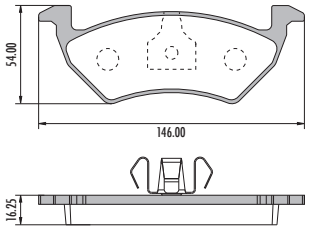

PD/769
FMSI 7980 D1075

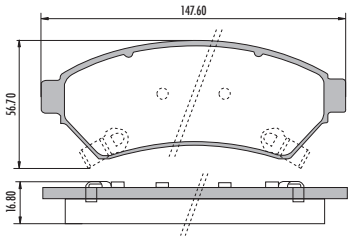

PD/697
FMSI 7384 D623

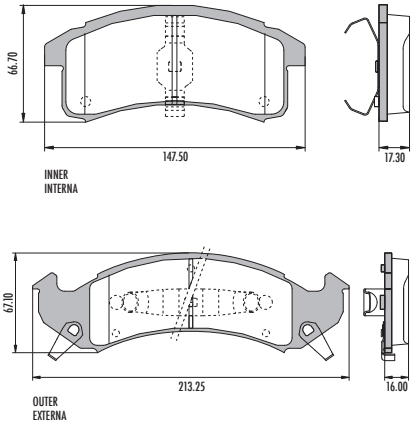

PD/564
WVA 23358
FMSI 7574 D699

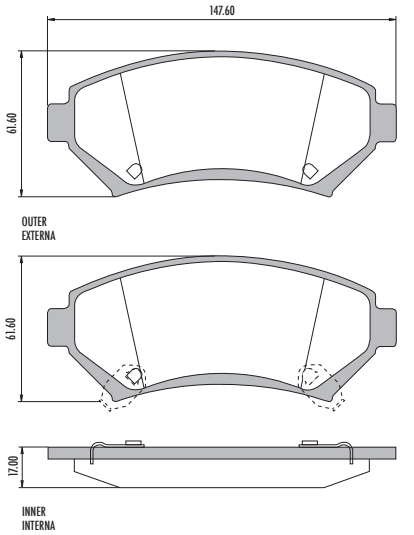

PD/674
FMSI 7693 D818

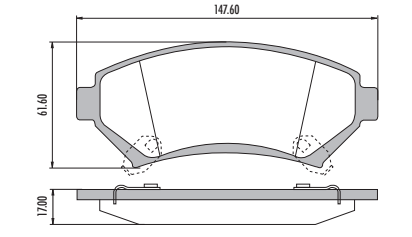

PD/609
FMSI 7384 D505

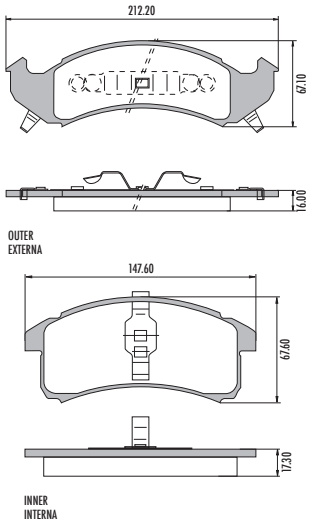

PD/799
FMSI 7901 D1000

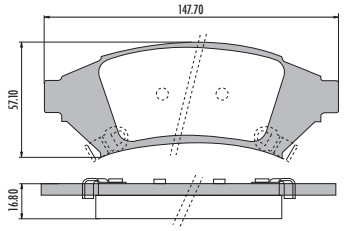

PD/508
FMSI 7554 D673
Kelsey Hayes System
Sistema Kelsey Hayes

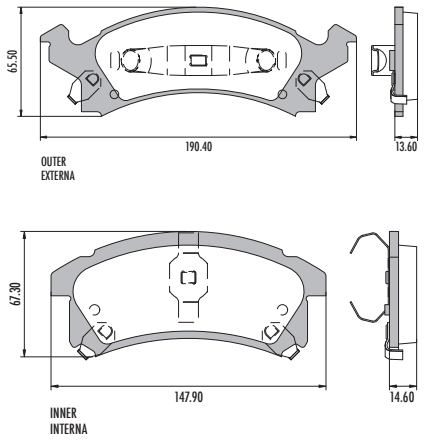

PD/1047
FMSI 7621 D753

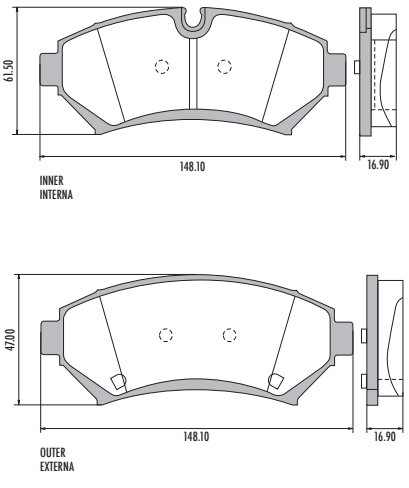

PD/1101
WVA 25034 / 25035 / 25036
FMSI 8730 D1522
Bosch System
Sistema Bosch

SHIM/ANTIRRUIDO

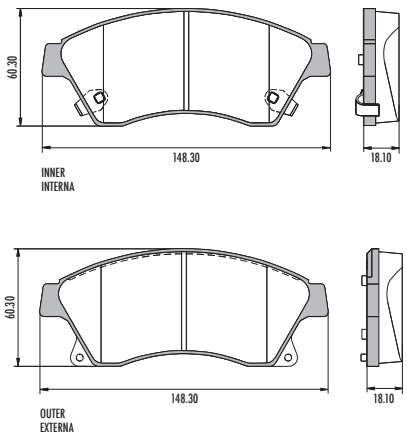

PD/1514

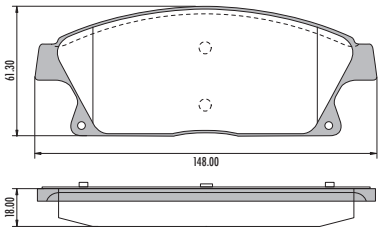

PD/586
WVA 23279
FMSI 7789 D910

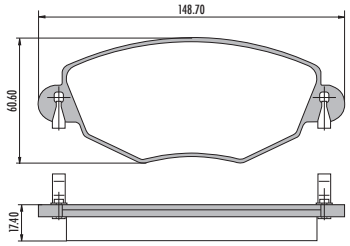

PD/1413
WVA 25466 / 25467 / 25468
FMSI 8392 D1608

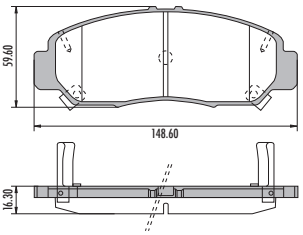

PD/649-E
WVA 23277
Bosch System
Sistema Bosch

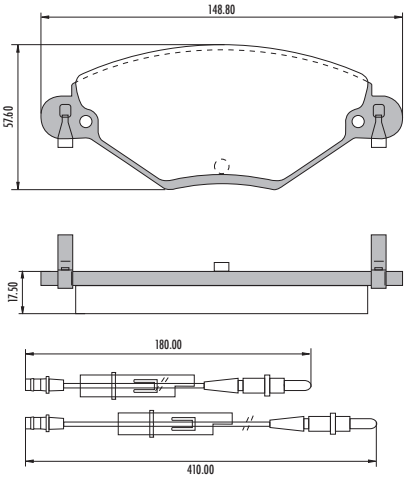

PD/1494

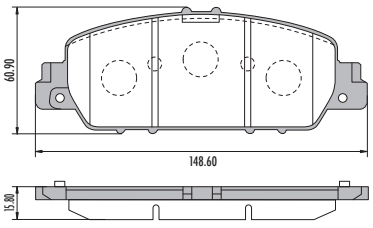

PD/1412
FMSI 8816 D1602

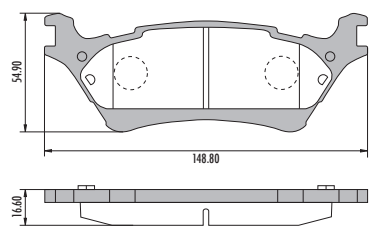

PD/719
FMSI 7656 D787
Akebono System
Sistema Akebono

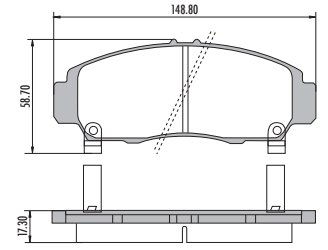

PD/1388
FMSI 7656 D1506

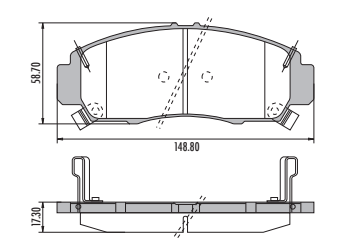

PD/1421

WVA 25552 / 25553 / 25554
FMSI 8840 D1625

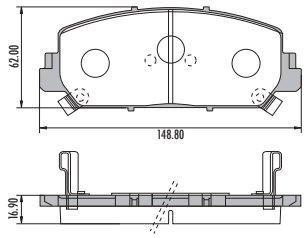

PD/353

WVA 21813

Bosch System
Sistema Bosch

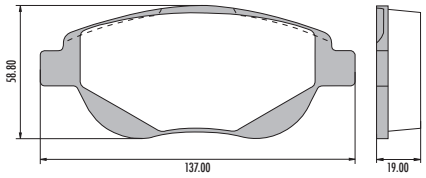

PD/449

WVA 21651
FMSI 7382 D503

Akebono System
Sistema Akebono

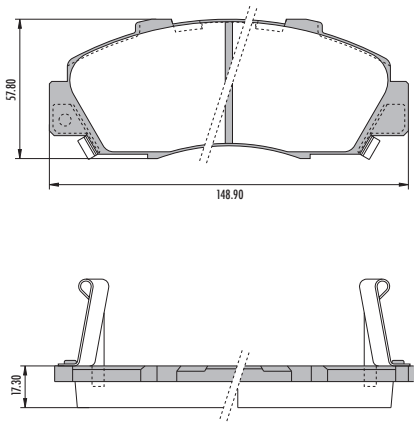

PD/667

WVA 24068 / 24069 / 24070 / 23725 / 24726 / 24727 / 24728
FMSI 7917 D1013

Akebono System
Sistema Akebono

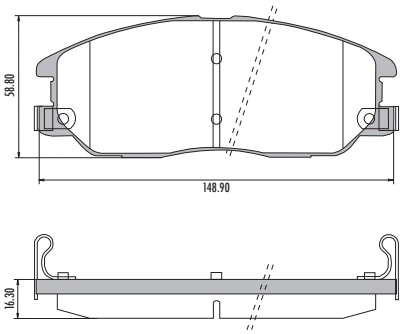

PD/1514

FMSI 8667 D1470

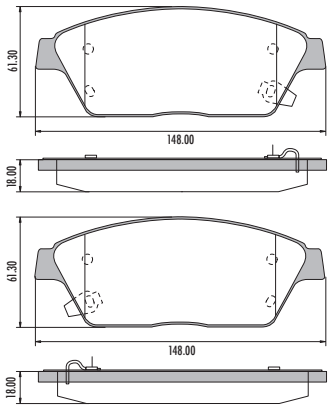

PD/630

WVA 23569
FMSI 7739 D864

Akebono System
Sistema Akebono

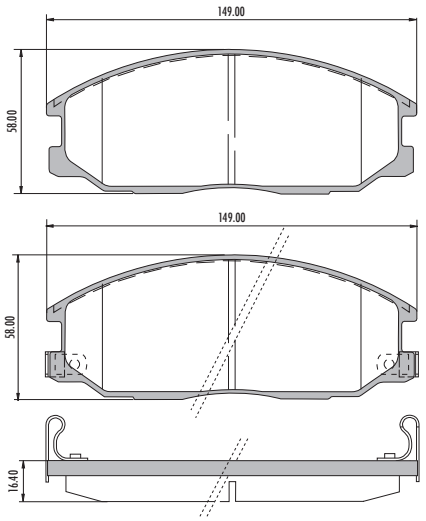

PD/150-A

WVA 21006

Wabco System
Sistema Wabco

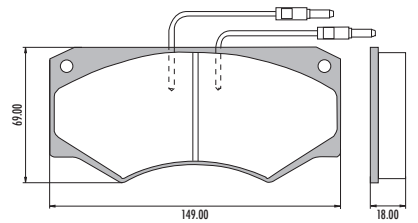

PD/191-A

WVA 29040

Wabco System
Sistema Wabco

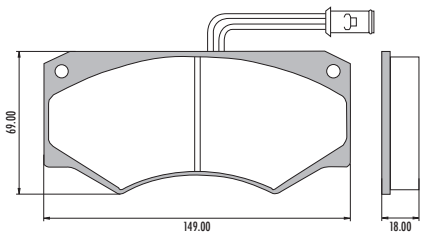

PD/192-A

WVA 29138

Wabco System
Sistema Wabco

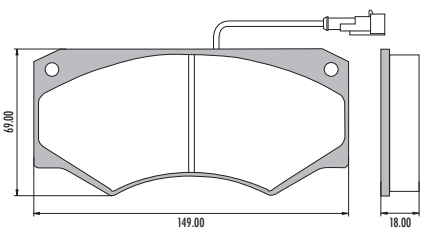

PD/360-A

WVA 29012

Perrot System
Sistema Perrot

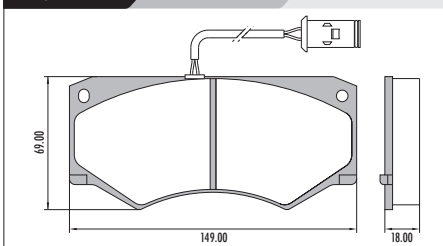

PD/711

WVA 24510 / 24511 / 24512
FMSI 8381 D1264

Mando System
Sistema Mando

SHIM/ANTIRRUIDO

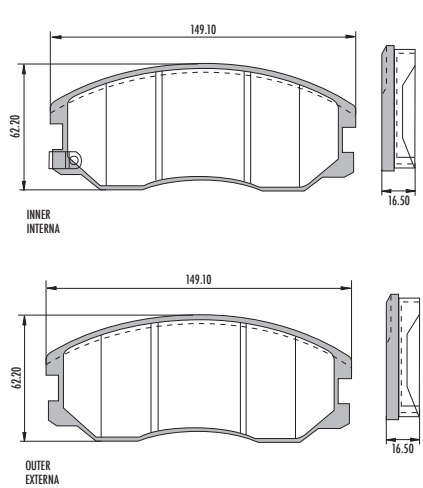

PD/486

WVA 23442
FMSI 7641 D774

Akebono System
Sistema Akebono

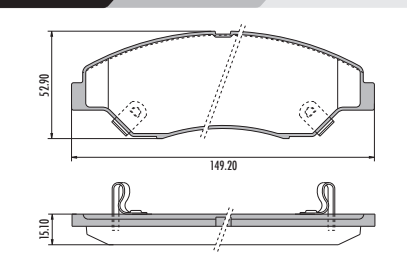

PD/383

WVA 21363
FMSI 7412 D530

Akebono System
Sistema Akebono

SHIM/ANTIRRUIDO

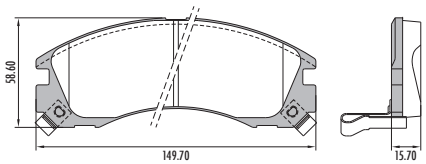

PD/675

FMSI 7412 D723

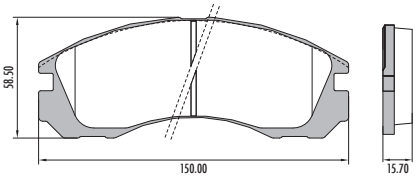

PD/1018

FMSI 7944 D1040

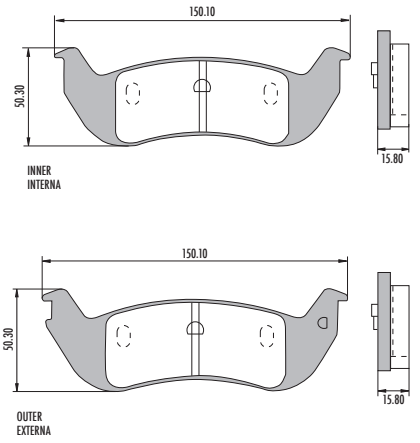

PD/494

WVA 23842

Teves System
Sistema Teves

SHIM/ANTIRRUIDO

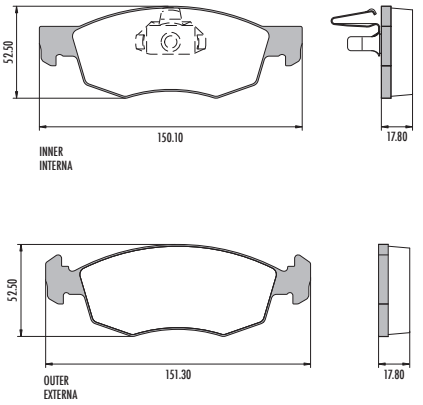

PD/1482

SHIM/ANTIRRUIDO

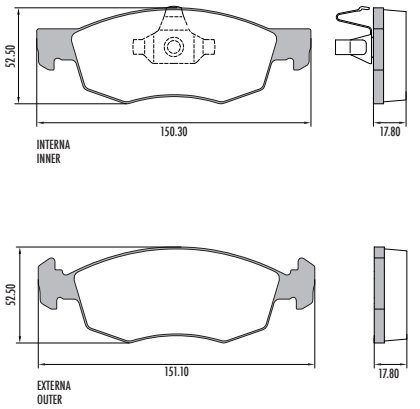

PD/1482-B

SHIM/ANTIRRUIDO

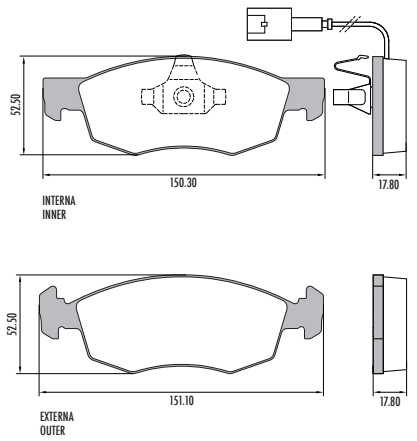

PD/80

Teves System
Sistema Teves

SHIM/ANTIRRUIDO

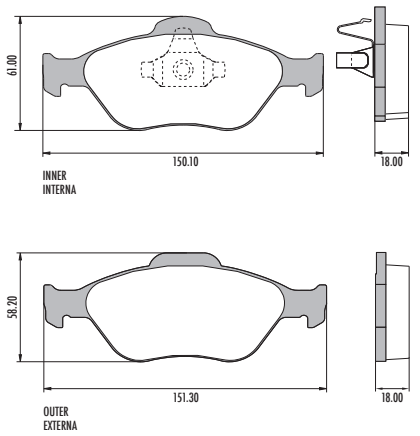

PD/497

WVA 23202 / 23203
FMSI 8289 D1175

Teves System
Sistema Teves

SHIM/ANTIRRUIDO

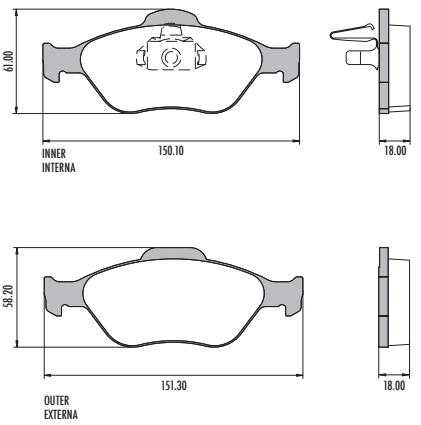

PD/1378

WVA 23200/ 23201
FMSI 8860

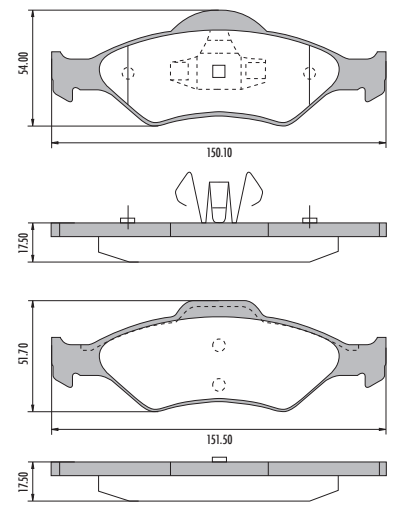

PD/349

FMSI 7835 D932

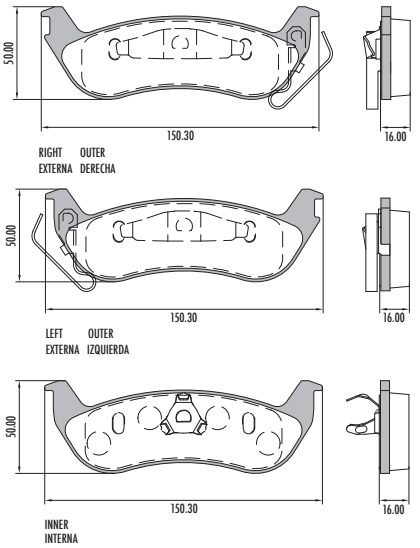

PD/503

FMSI 8320 D1200

Akebono System
Sistema Akebono

SHIM/ANTIRRUIDO

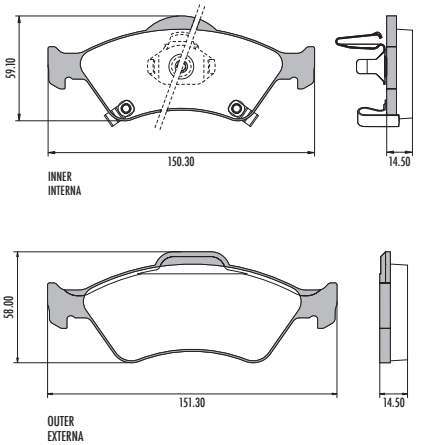

PD/685

FMSI 8763 D1553 — Teves System / Sistema Teves

SHIM/ANTIRRUIDO

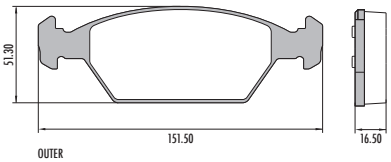

OUTER
EXTERNA

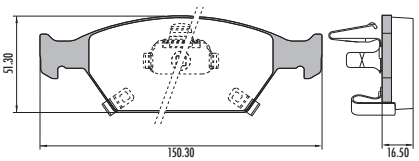

INNER
INTERNA

PD/1488

WVA 25153 / 25154 / 25155
FMSI 8401 D1284

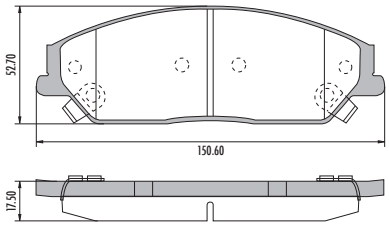

PD/805

FMSI 7962 D1056

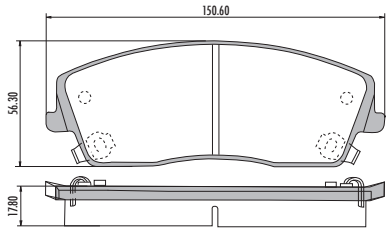

PD/1470

WVA 24662
FMSI 8922 D1696 — Bosch System / Sistema Bosch

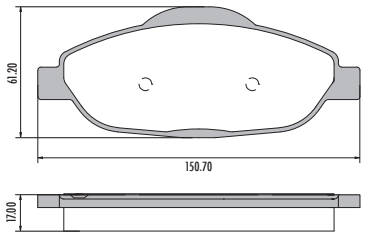

PD/673-B

WVA 23711/ 23712
FMSI 8745 D1536 — Bosch System / Sistema Bosch

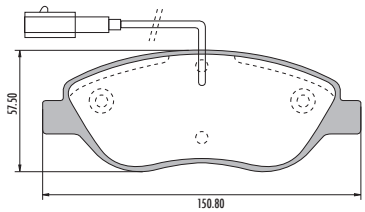

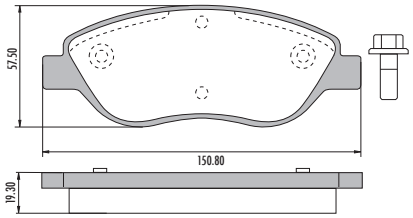

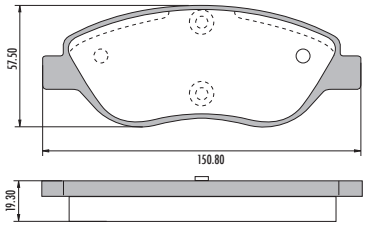

PD/500

WVA 23879 / 23880
FMSI 8334 D1214 — Akebono System / Sistema Akebono

SHIM/ANTIRRUIDO

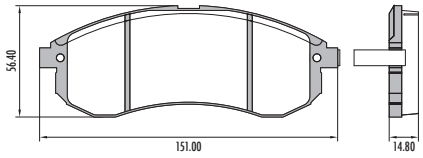

PD/543

FMSI 7134A D220

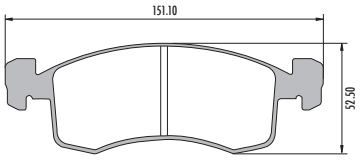

OUTER
EXTERNA

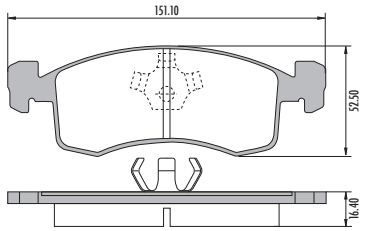

INNER
INTERNA

PD/390

WVA 20753 — Teves System / Sistema Teves

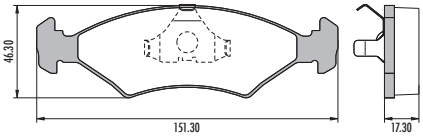

PD/24

WVA 20752 / 20753
FMSI 7529 D649 — Teves System / Sistema Teves

SHIM/ANTIRRUIDO

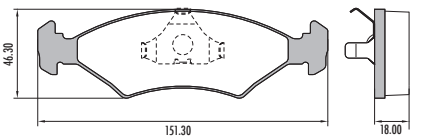

PD/24-A

WVA 20783
FMSI 7529 D649 — Teves System / Sistema Teves

SHIM/ANTIRRUIDO

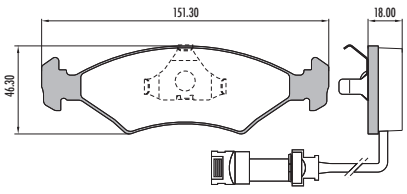

PD/24-B

FMSI 7529 D649 — Teves System / Sistema Teves

SHIM/ANTIRRUIDO

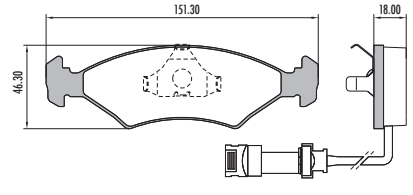

PD/34

FMSI 7529 D649 — Teves System / Sistema Teves

SHIM/ANTIRRUIDO

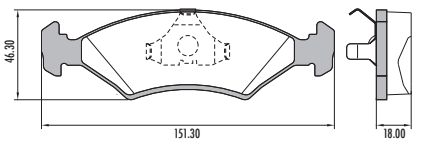

PD/65

WVA 20753
FMSI 8251 D1140 — Teves System / Sistema Teves

SHIM/ANTIRRUIDO

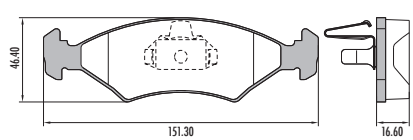

PD/79

Teves System / Sistema Teves

SHIM/ANTIRRUIDO

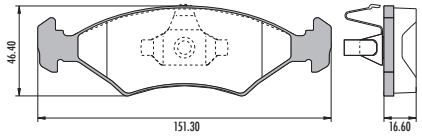

PD/81
Teves System / Sistema Teves
SHIM/ANTIRRUIDO

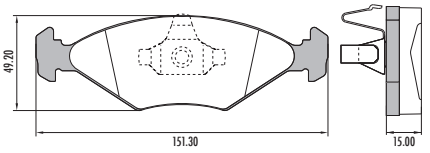

PD/28
WVA 21193 / FMSI 7242 D350
Teves System / Sistema Teves
SHIM/ANTIRRUIDO

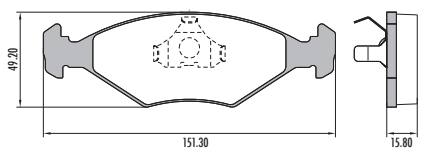

PD/28-B
Teves System / Sistema Teves
SHIM/ANTIRRUIDO

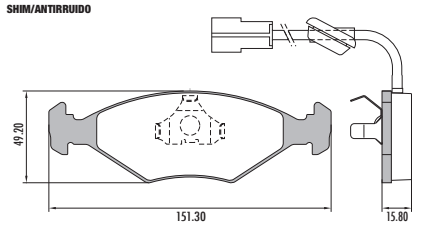

PD/51
FMSI 8288 D350
Teves System / Sistema Teves
SHIM/ANTIRRUIDO

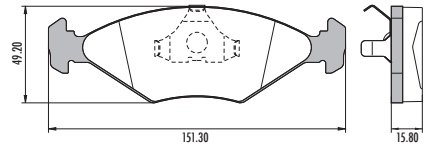

PD/90
Teves System / Sistema Teves
SHIM/ANTIRRUIDO

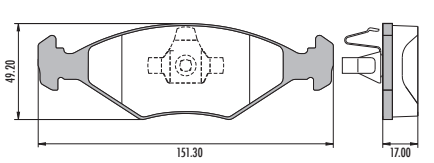

PD/25
WVA 21193 / FMSI 7242 D350
Teves System / Sistema Teves
SHIM/ANTIRRUIDO

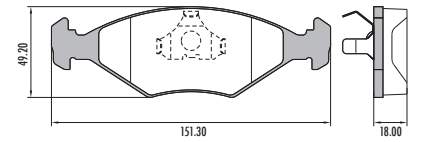

PD/25-A
WVA 21195
Teves System / Sistema Teves
SHIM/ANTIRRUIDO

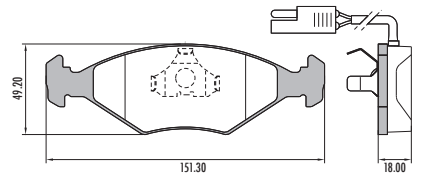

PD/25-B
Teves System / Sistema Teves
SHIM/ANTIRRUIDO

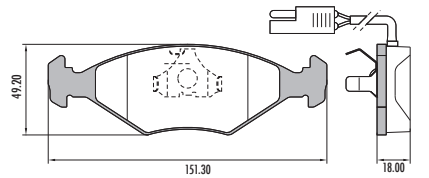

PD/25-RA
Teves System / Sistema Teves
SHIM/ANTIRRUIDO

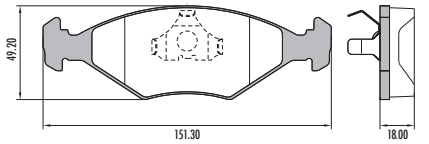

PD/25-RA-A
Teves System / Sistema Teves
SHIM/ANTIRRUIDO

PD/25-RA-B
SHIM/ANTIRRUIDO

PD/25-RA-FA
SHIM/ANTIRRUIDO

PD/25-RA-FB
SHIM/ANTIRRUIDO

PD/25-RA-R
SHIM/ANTIRRUIDO

PD/25-RA-P
SHIM/ANTIRRUIDO

PD/25-RA-R PD/25-RA-P

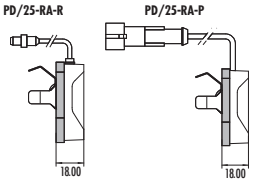

PD/25-RA-A PD/25-RA-B

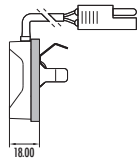

PD/25-RA-FA PD/25-RA-FB

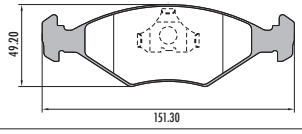

PD/47
WVA 21962
Teves System / Sistema Teves
SHIM/ANTIRRUIDO

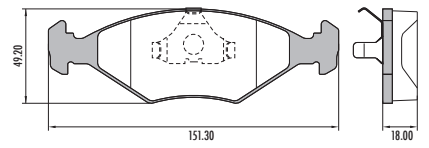

PD/47-A
WVA 21193
Teves System / Sistema Teves
SHIM/ANTIRRUIDO

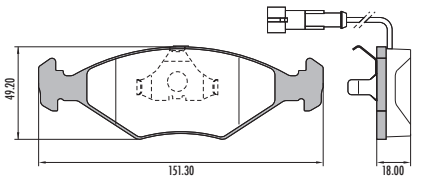

PD/47-RA-P
Teves System / Sistema Teves
SHIM/ANTIRRUIDO

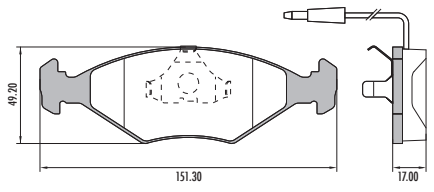

PD/60
Teves System / Sistema Teves
SHIM/ANTIRRUIDO

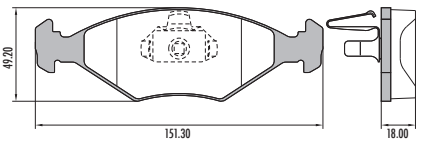

PD/60-A
WVA 23218 / 23220
Teves System / Sistema Teves
SHIM/ANTIRRUIDO

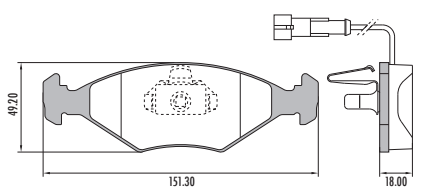

PD/87
Teves System / Sistema Teves
SHIM/ANTIRRUIDO

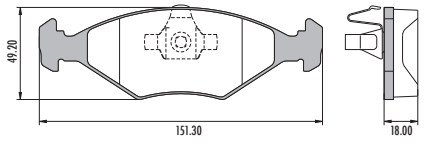

PD/89
Teves System / Sistema Teves
SHIM/ANTIRRUIDO

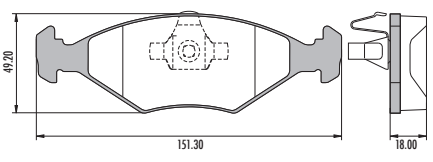

PD/23
WVA 21193
FMSI 7242 D350
Teves System
Sistema Teves

SHIM/ANTIRRUIDO

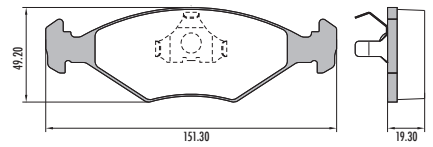

PD/433-B
WVA 21930
Teves System
Sistema Teves

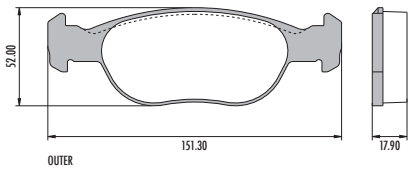

OUTER
EXTERNA

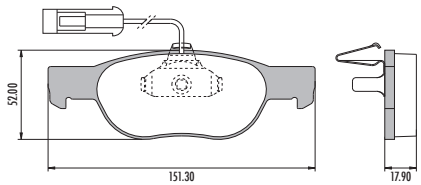

INNER
INTERNA

PD/48
WVA 20907 / 20908
FMSI 7201 D298
Teves System
Sistema Teves

SHIM/ANTIRRUIDO

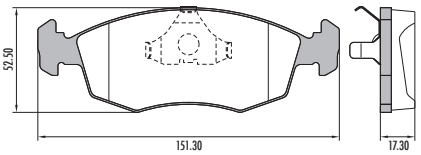

PD/48-A
WVA 20907
Teves System
Sistema Teves

SHIM/ANTIRRUIDO

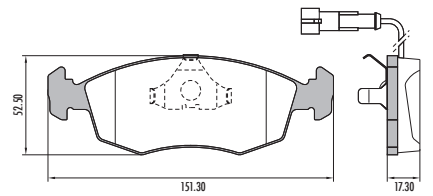

PD/68
WVA 23229
FMSI 7201 D298A
Teves System
Sistema Teves

SHIM/ANTIRRUIDO

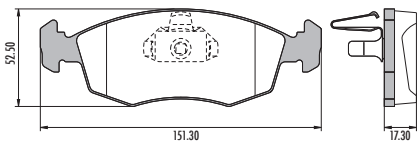

PD/68-B
Teves System
Sistema Teves

SHIM/ANTIRRUIDO

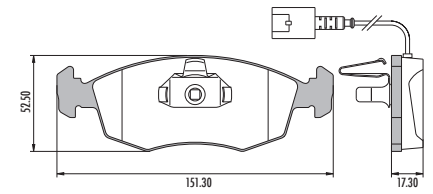

PD/88
FMSI 8777 D1568
Teves System
Sistema Teves

SHIM/ANTIRRUIDO

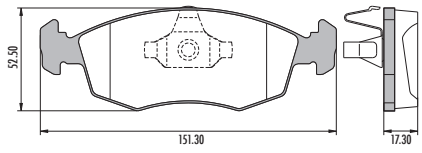

PD/39
WVA 20907
FMSI 7201 D298
Teves System
Sistema Teves

SHIM/ANTIRRUIDO

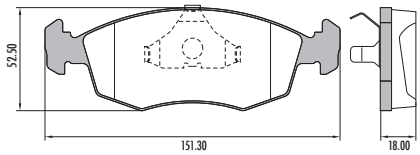

PD/1043
WVA 21664/ 21665
FMSI 7583 D710

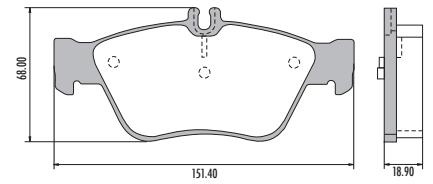

PD/85
Teves System
Sistema Teves

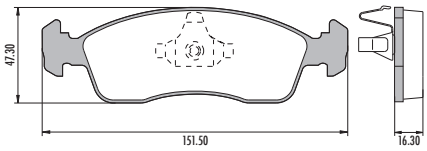

PD/94
Teves System
Sistema Teves

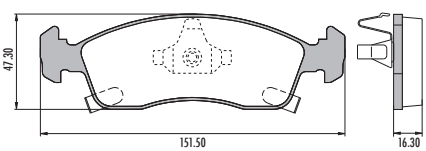

PD/385
WVA 21292
FMSI 7437 D558
Teves System
Sistema Teves

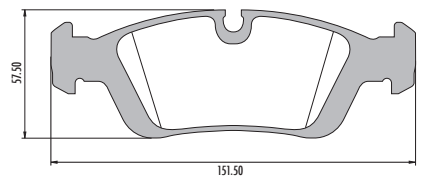

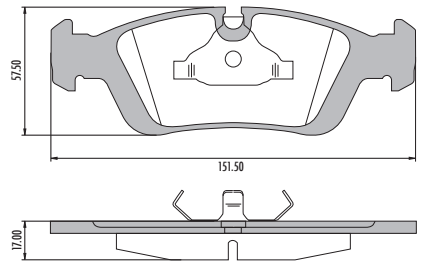

PD/1342

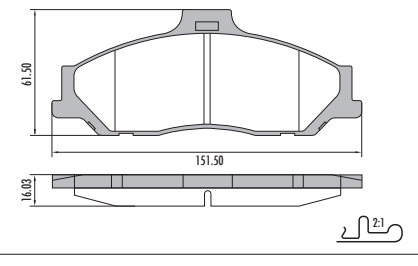

PD/1433
WVA 25149 / 25150 / 25151
FMSI 8906 D1677
Teves System
Sistema Teves

SHIM/ANTIRRUIDO

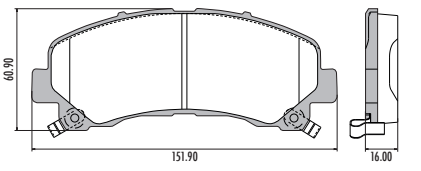

PD/577
FMSI 7794 D913
Bosch System
Sistema Bosch

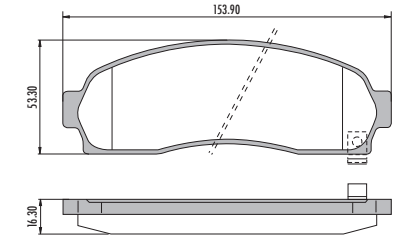

PD/69
WVA 23649
Sumitomo System
Sistema Sumitomo

SHIM/ANTIRRUIDO

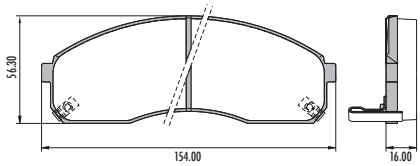

PD/332

WVA 23472
FMSI 7532 D652

Bosch System
Sistema Bosch

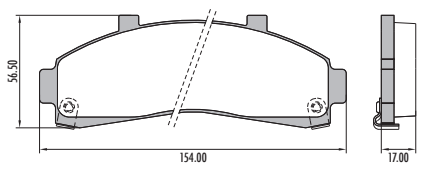

PD/64

WVA 23484

Sumitomo System
Sistema Sumitomo

SHIM/ANTIRRUIDO

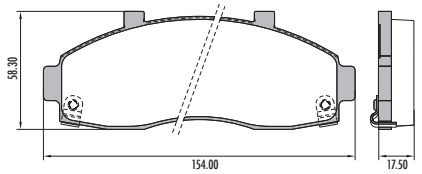

PD/354

Akebono System
Sistema Akebono

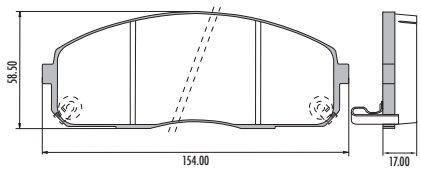

PD/331

WVA 23784

Akebono System
Sistema Akebono

SHIM/ANTIRRUIDO

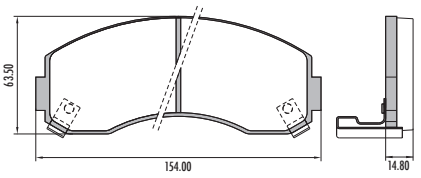

PD/365

FMSI 7706 D833

Bosch System
Sistema Bosch

SHIM/ANTIRRUIDO

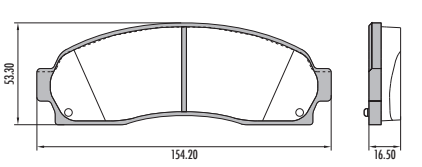

PD/809

WVA 24342
FMSI 7994 D1089

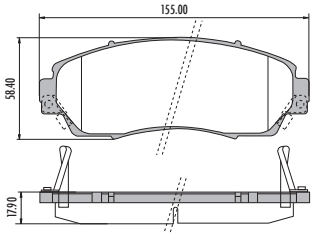

PD/1393

WVA 24342 / 25351
FMSI 7994 D1521

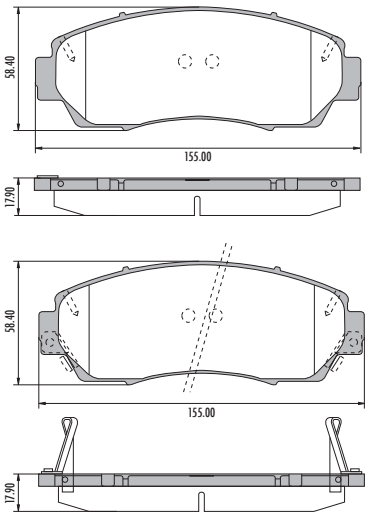

PD/634

WVA 24092 / 24178 / 24179

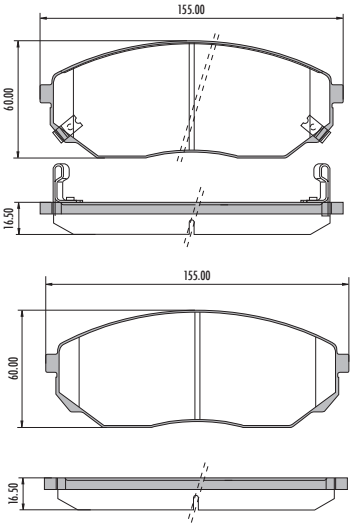

PD/1370

WVA 23313/ 24255

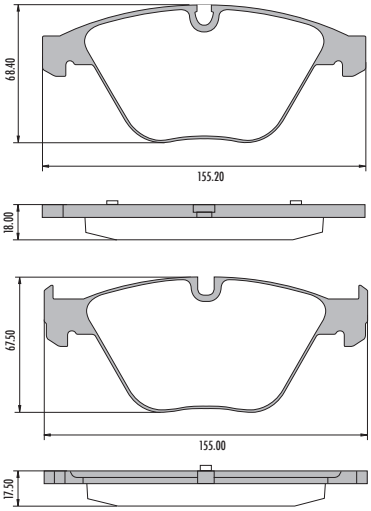

PD/786

WVA 23073
FMSI 7664 D794

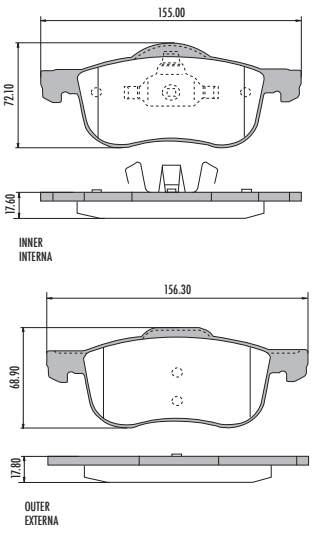

PD/1298

FMSI 8417 D1301

Hyundai System
Sistema Hyundai

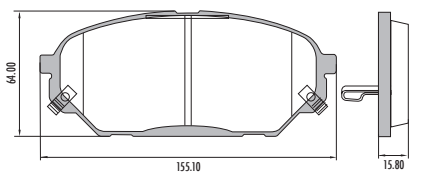

PD/1447

WVA 23720/ 24213/ 24214

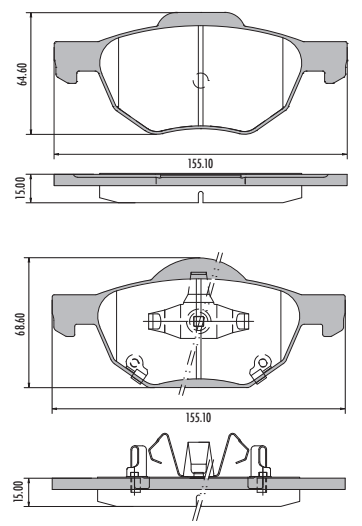

PD/66

Teves System
Sistema Teves

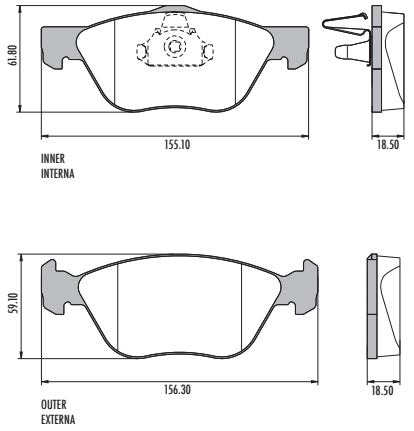

PD/66-A

WVA 21636

Teves System
Sistema Teves

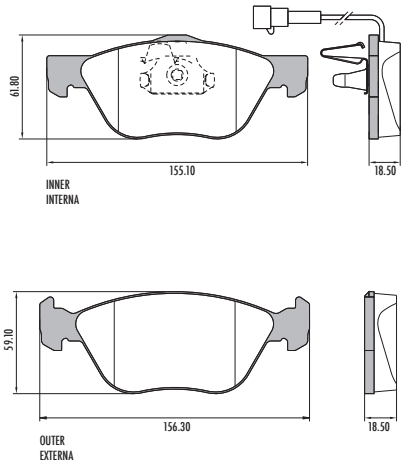

PD/66-B

Teves System
Sistema Teves

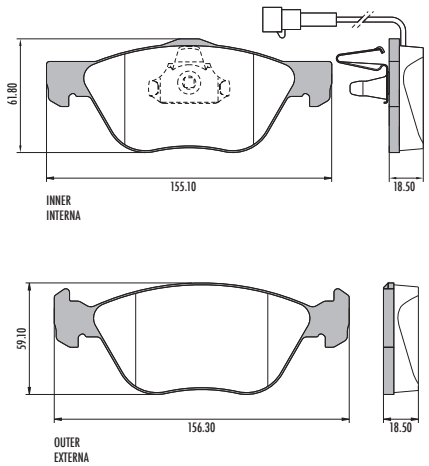

PD/78-A

WVA 21636

Teves System
Sistema Teves

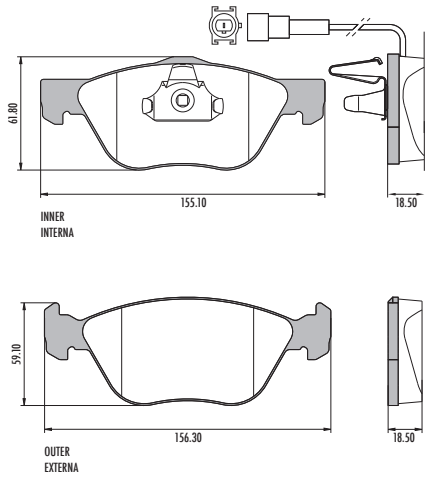

PD/92

Teves System
Sistema Teves

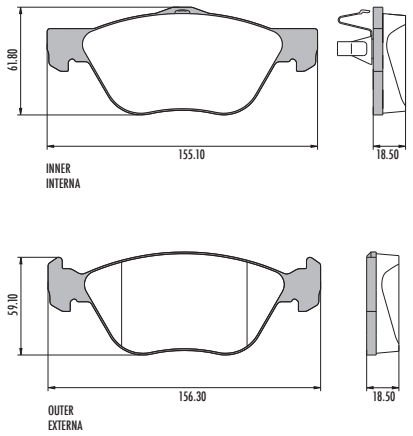

PD/92-B

Teves System
Sistema Teves

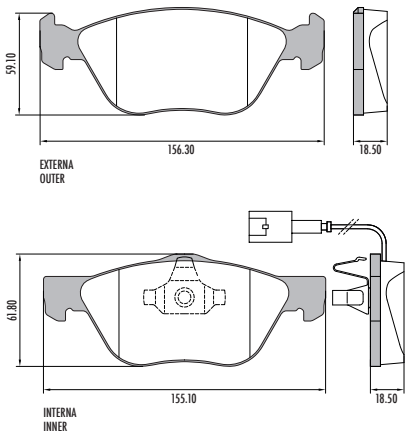

PD/72

WVA 23057
FMSI 8252 D1141

Teves System
Sistema Teves

SHIM/ANTIRRUIDO

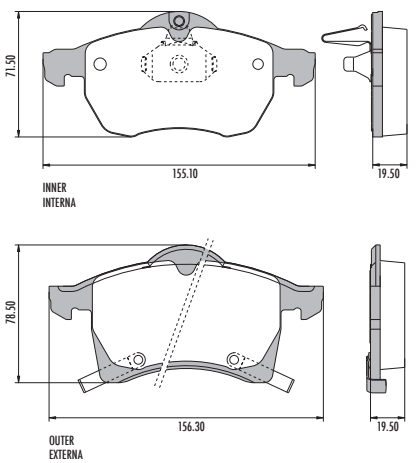

PD/93

Teves System
Sistema Teves

SHIM/ANTIRRUIDO

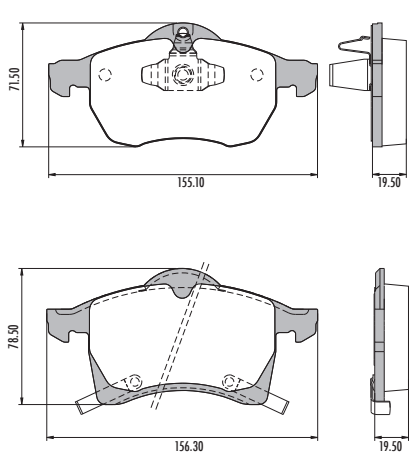

PD/676

FMSI 8326 D1206

Teves System
Sistema Teves

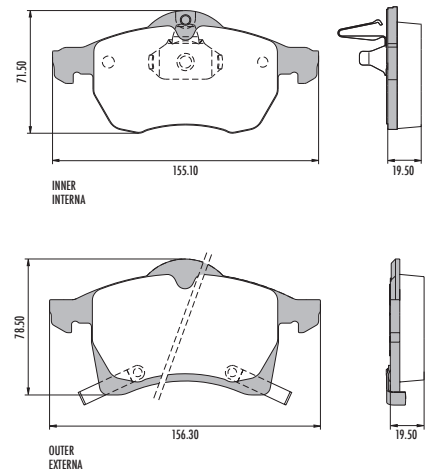

PD/61

WVA 21829
FMSI 7605 D736

Teves System
Sistema Teves

SHIM/ANTIRRUIDO

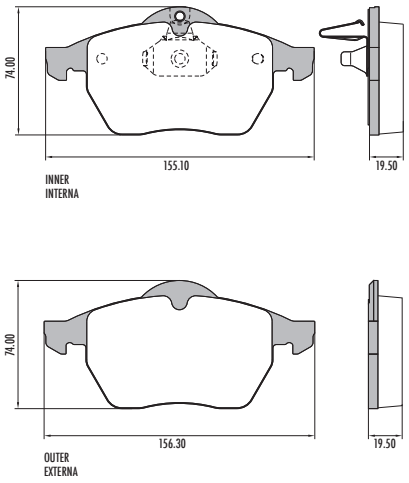

PD/1376

WVA 24709/ 24710

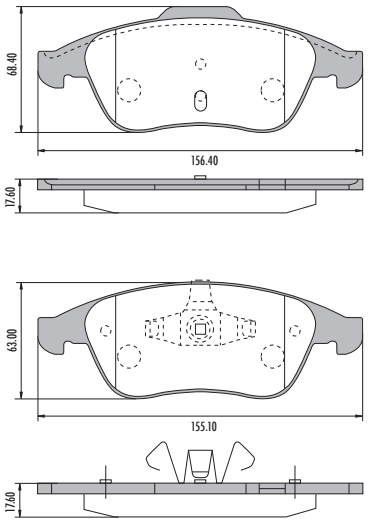

PD/1232-B

WVA 23801/ 23912/ 23913
FMSI 8220 D915

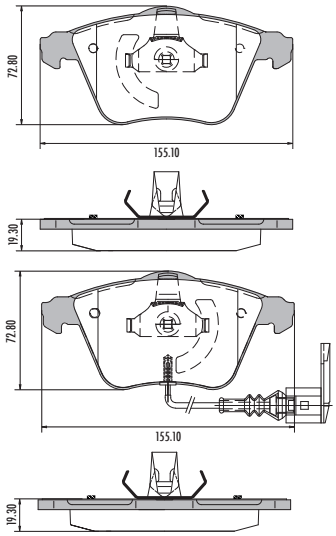

PD/352

WVA 21394
FMSI 7528 D648 - 7528 D745

Teves System
Sistema Teves

SHIM/ANTIRRUIDO

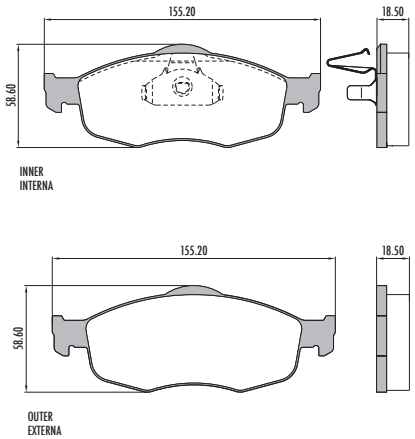

PD/352-A

WVA 21395
FMSI 7672 D801

Teves System
Sistema Teves

SHIM/ANTIRRUIDO

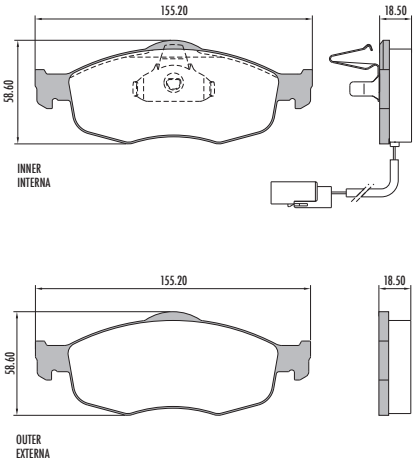

PD/1377

WVA 24914 / 24538
FMSI 8844 D1627

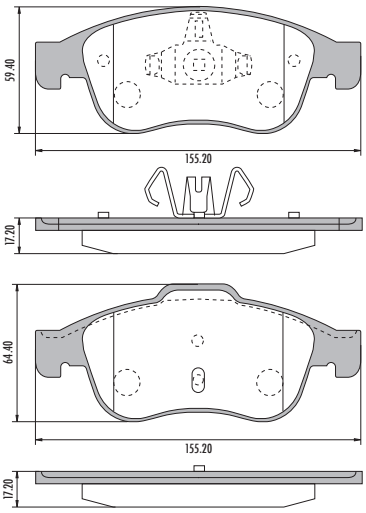

PD/1422

WVA 24538/ 24914
FMSI 8844 D1627

Ate System
Sistema Ate

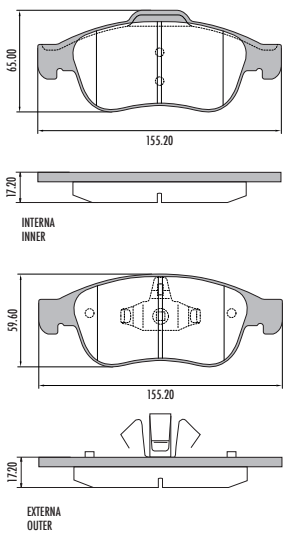

PD/1432

WVA 25591 / 25592 / 25593
FMSI 8882 D1653

Fomoco System
Sistema Fomoco

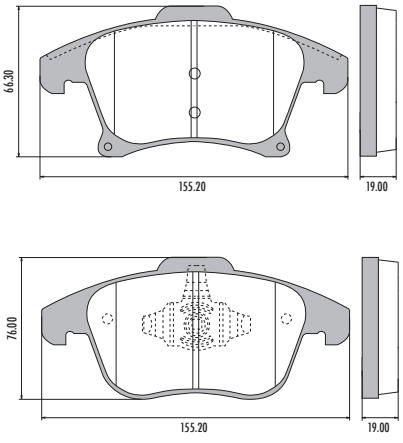

PD/1301

WVA 24123/ 24214
FMSI 8421 D1306

Teves System
Sistema Teves

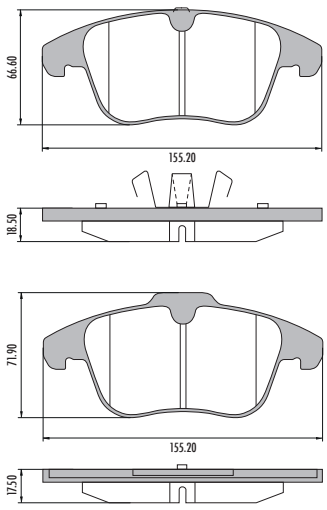

PD/1457-B

WVA 24332/ 24333/ 24334
FMSI 8486 D1375

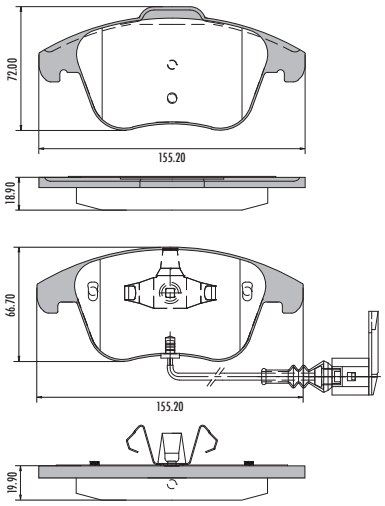

PD/1493-B

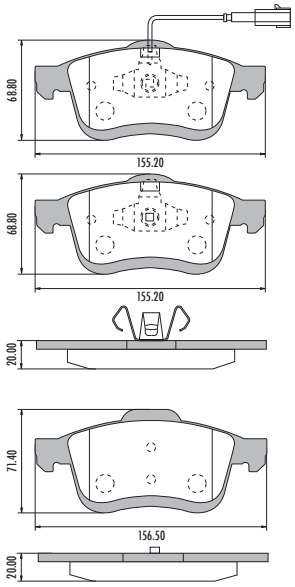

PD/1044

FMSI 7592 D946 7292 D947

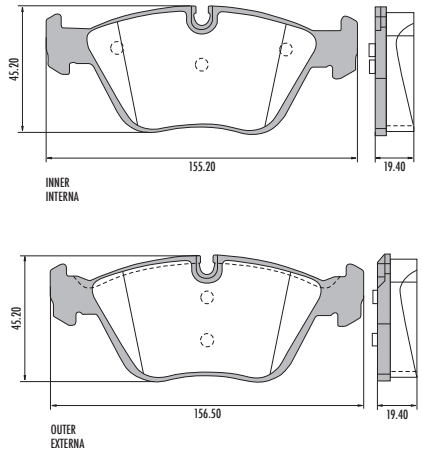

PD/1000

SHIM/ANTIRRUIDO

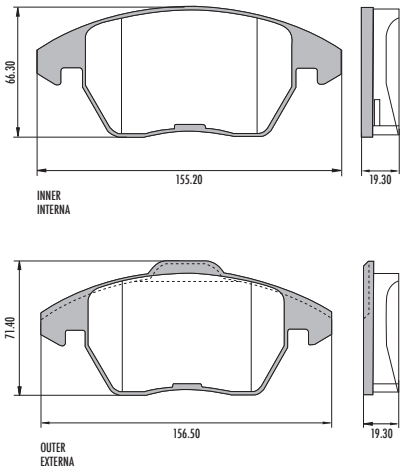

PD/1000-B

WVA 23587 / 23588 / 23589
FMSI 8212 D1107
Teves System
Sistema Teves

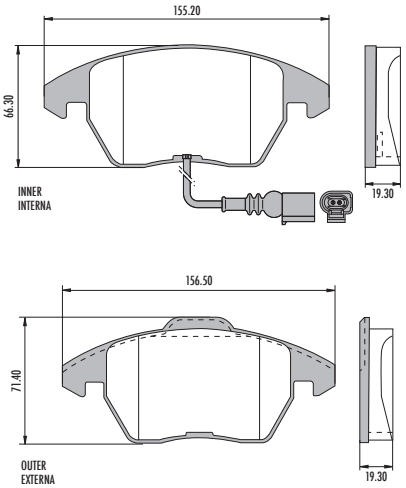

PD/1063

FMSI 7904 D1003

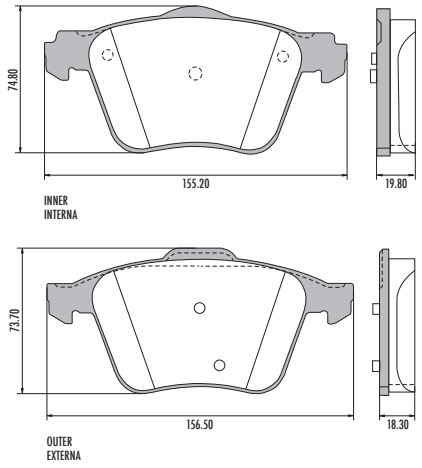

PD/729

FMSI 7605 D819

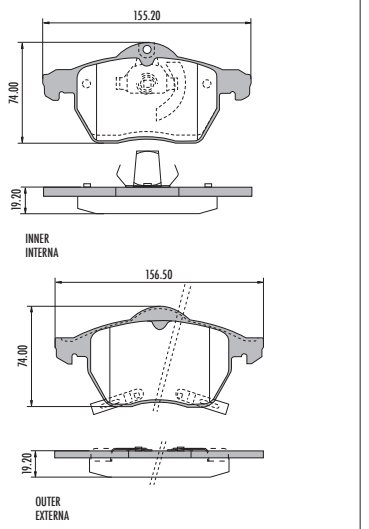

PD/1444

WVA 23245/23247/23248

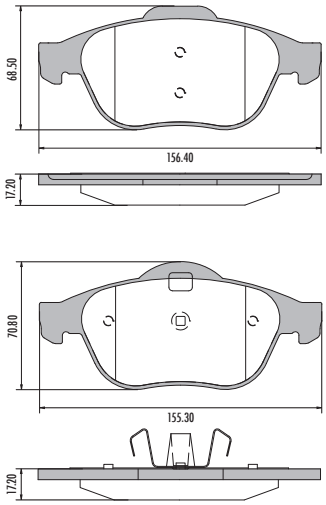

PD/134

WVA 23951
FMSI 7744 D869
Teves System
Sistema Teves

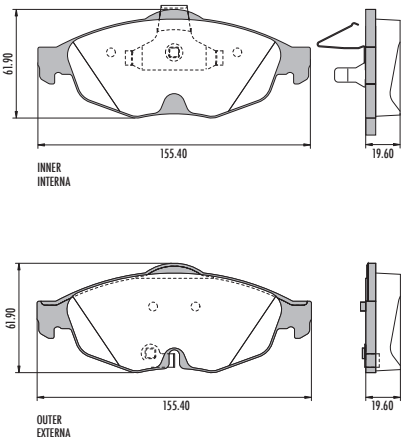

PD/1398

WVA 23215 / 24325
FMSI 8750 D1542

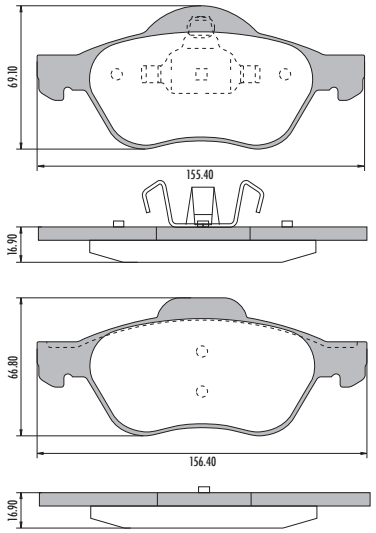

PD/767

WVA 23723 / 23724
FMSI 7947 D1044
Teves System
Sistema Teves

SHIM/ANTIRRUIDO

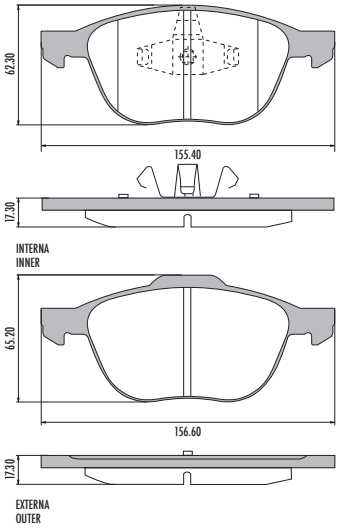

PD/1103

Teves System
Sistema Teves

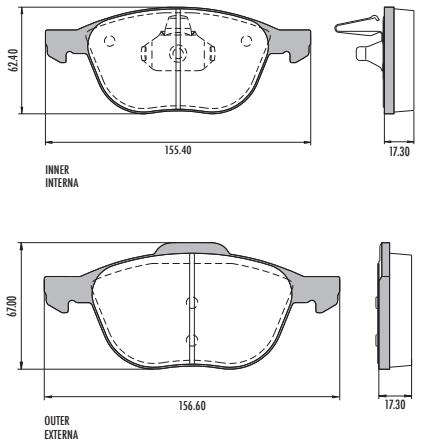

PD/780

FMSI 7424A D544

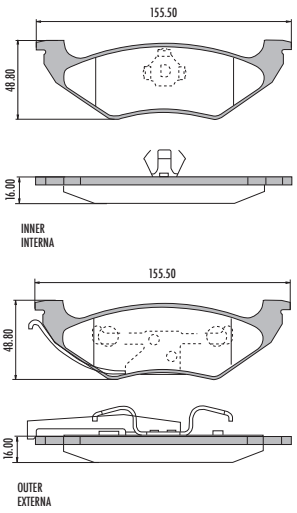

PD/582

WVA 24036 / 24037 / 24038
FMSI 7734 D858

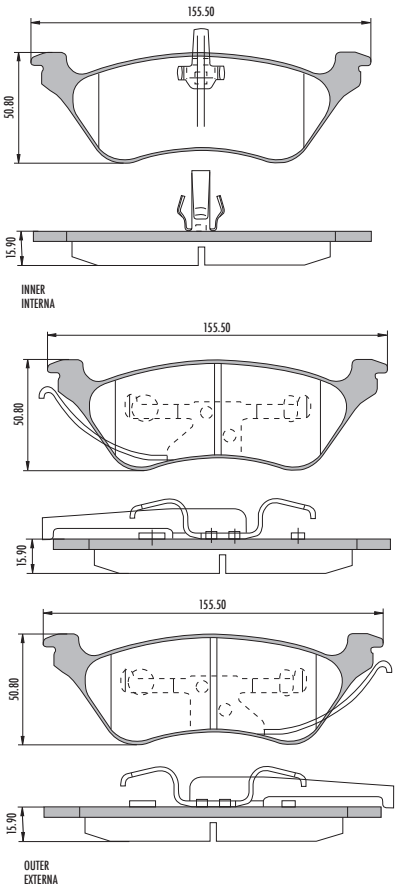

PD/771

WVA 24529 / 24530
FMSI 8728 D1519
Tokico System
Sistema Tokico

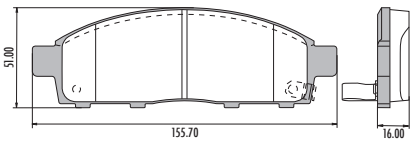

PD/318-A

WVA 20926 / 20928
Bendix System
Sistema Bendix

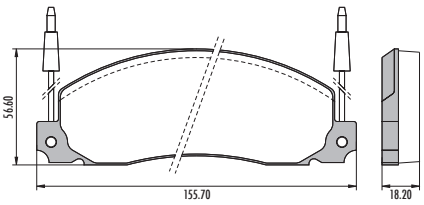

PD/37

WVA 21190 / 21192 / 21201
FMSI 7666 D796
Teves System
Sistema Teves

SHIM/ANTIRRUIDO

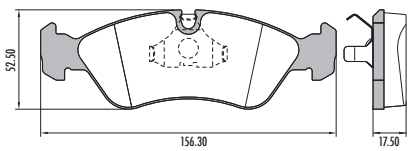

PD/84

Teves System
Sistema Teves

SHIM/ANTIRRUIDO

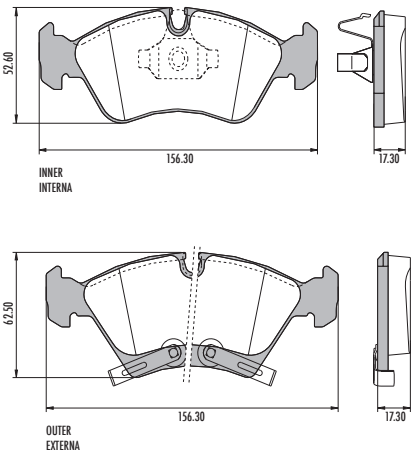

PD/52

WVA 21862
Teves System
Sistema Teves

SHIM/ANTIRRUIDO

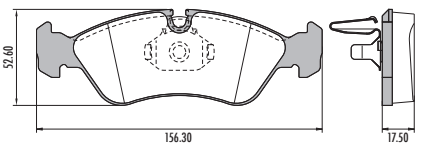

PD/77

FMSI 8308 D1189

Teves System
Sistema Teves

SHIM/ANTIRRUIDO

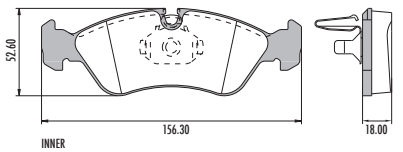

INNER
INTERNA

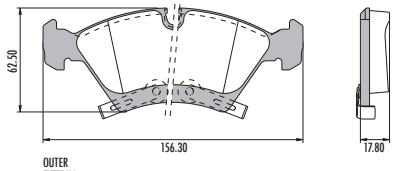

OUTER
EXTERNA

PD/403-B

WVA 21927

Teves System
Sistema Teves

SHIM/ANTIRRUIDO

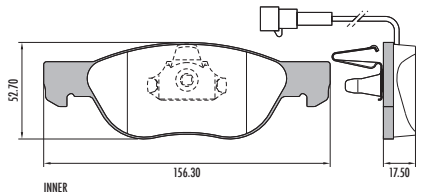

INNER
INTERNA

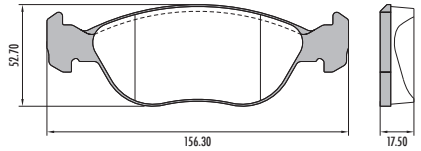

OUTER
EXTERNA

PD/44

WVA 23120

Teves System
Sistema Teves

SHIM/ANTIRRUIDO

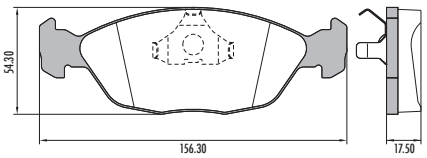

PD/44-B

Teves System
Sistema Teves

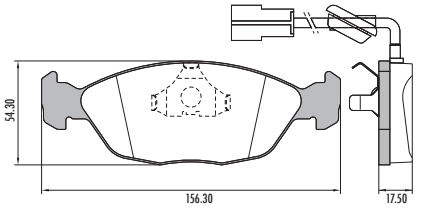

PD/340-B

WVA 23392
FMSI 7710 D687

Teves System
Sistema Teves

SHIM/ANTIRRUIDO

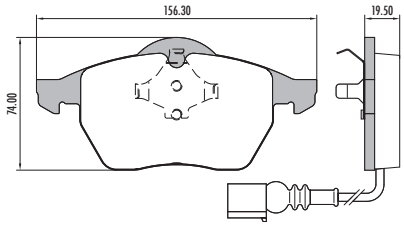

PD/384

WVA 21911

Teves System
Sistema Teves

SHIM/ANTIRRUIDO

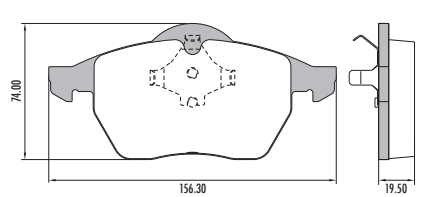

PD/384-A

WVA 20676
FMSI 7434 D555

Teves System
Sistema Teves

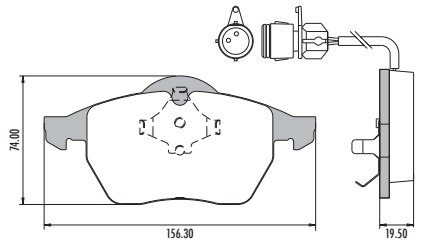

PD/525-A

WVA 21938
FMSI 7715 D840

Teves System
Sistema Teves

SHIM/ANTIRRUIDO

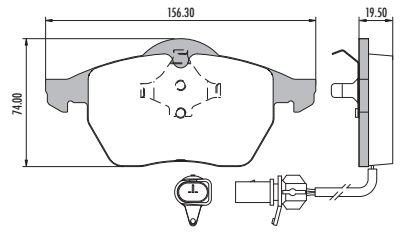

PD/481-A

WVA 23035 / 23036

Teves System
Sistema Teves

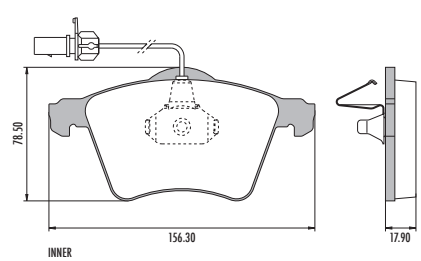

INNER
INTERNA

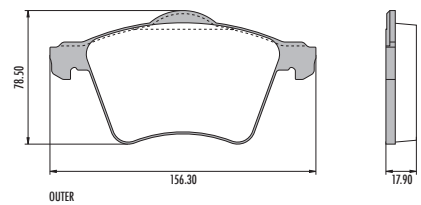

OUTER
EXTERNA

PD/341

WVA 21592
FMSI 7909 D1006

Teves System
Sistema Teves

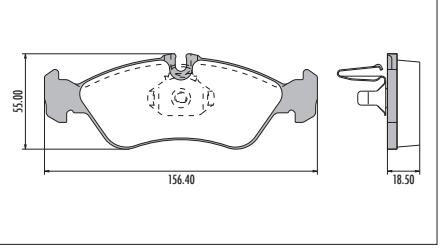

PD/341-A

WVA 23901 / 23902
FMSI 7909 D1006A

Teves System
Sistema Teves

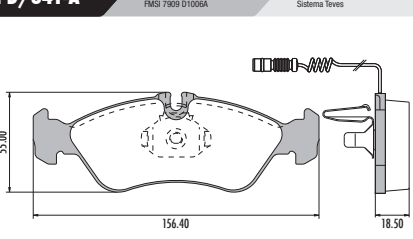

PD/783

FMSI 7494 D618

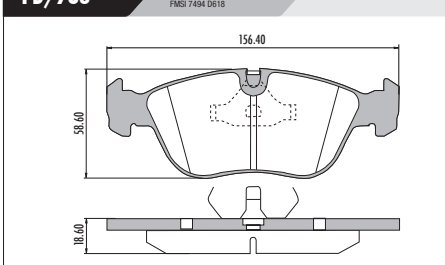

PD/1003

FMSI 7395 D394

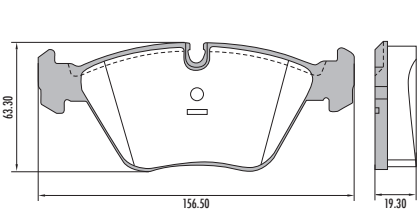

PD/417

WVA 21576 / 21577
FMSI 7849 D950

Teves System
Sistema Teves

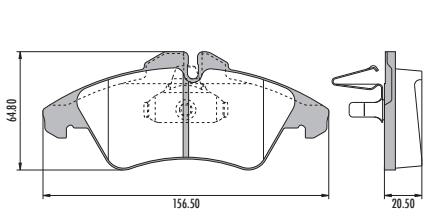

PD/417-A

WVA 21576
FMSI 7849 D950A

Teves System
Sistema Teves

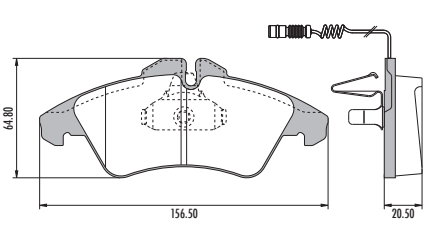

PD/1042-A

WVA 21486/ 21642
FMSI 7560 D681

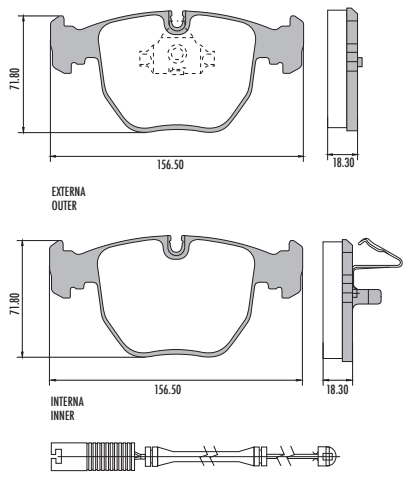

PD/530

WVA 23787
FMSI 7719 D843
Teves System
Sistema Teves

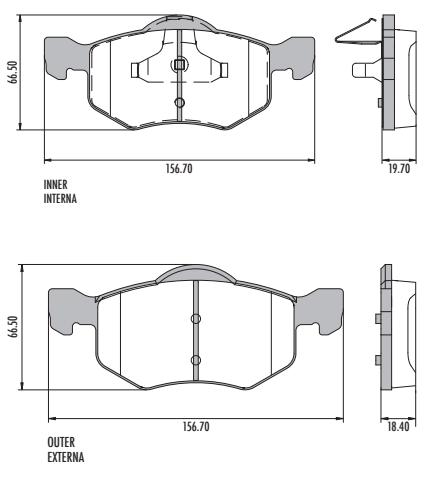

PD/1287

WVA 24351 / 24352 / 24568 / 24569
FMSI 8322 D1202
Mando System
Sistema Mando

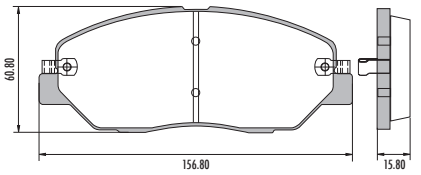

PD/1352

FMSI 8400 D1202
Mando System
Sistema Mando

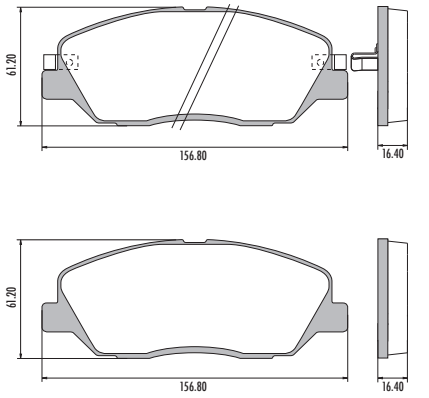

PD/1014

FMSI 7766 D888

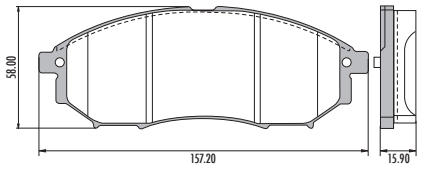

PD/1067

FMSI 7983 D1078

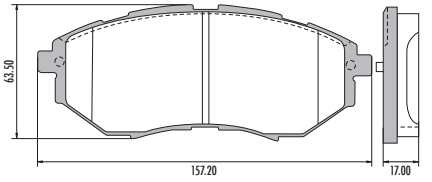

PD/19-C

FMSI 788 D50 - 7013A D50
Bendix System
Sistema Bendix

SHIM/ANTIRRUIDO

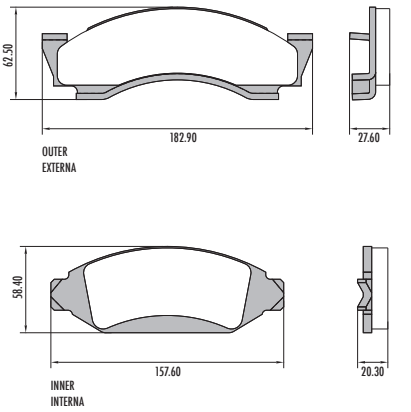

PD/523

FMSI 7436 D557

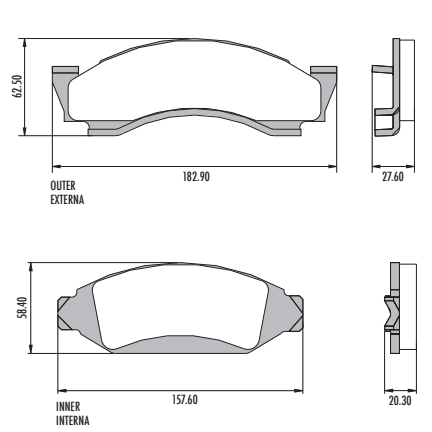

PD/1078

FMSI 8331 D1293

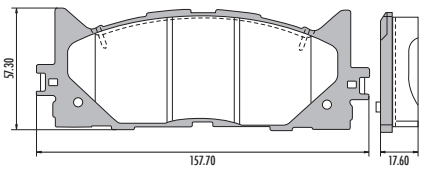

PD/1406

WVA 25297 / 25298 / 25299
FMSI 8208 D1584

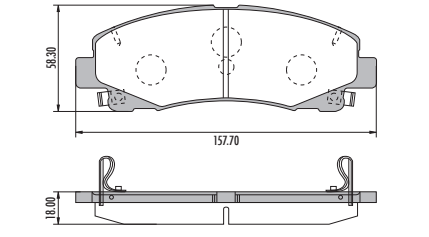

PD/755

WVA 24083
FMSI 7846 D945

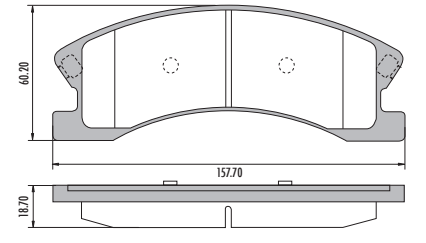

PD/591

FMSI 7916 D1012

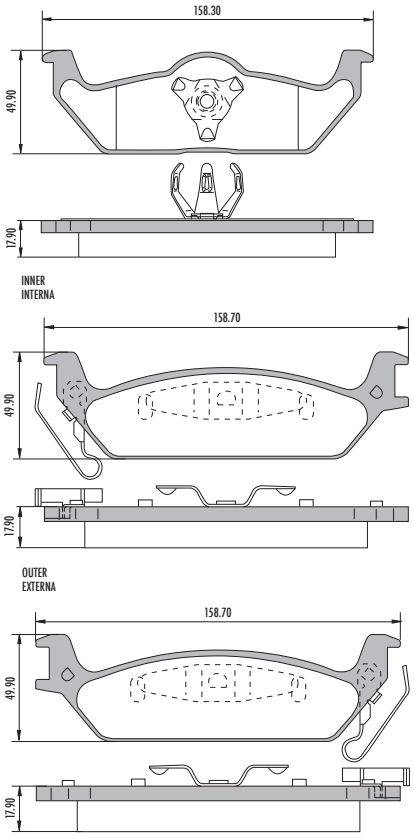

PD/63

FMSI 7626 D757

Bosch System
Sistema Bosch

SHIM/ANTIRRUIDO

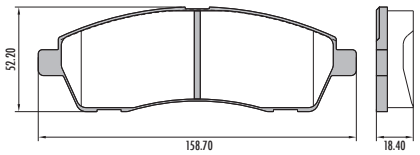

PD/561

WVA 23420
FMSI 7566 D691 - 7566 D855

Sumitomo System
Sistema Sumitomo

SHIM/ANTIRRUIDO

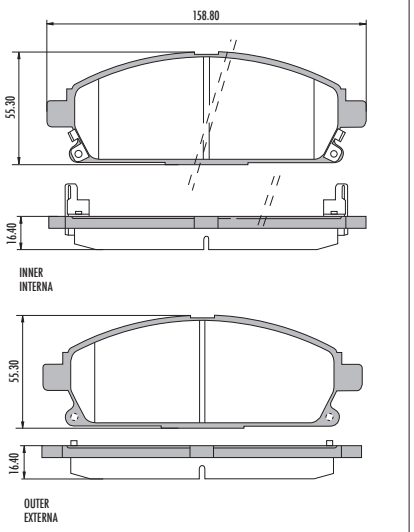

PD/562

FMSI 7910 D691 - 7910 D855

Sumitomo System
Sistema Sumitomo

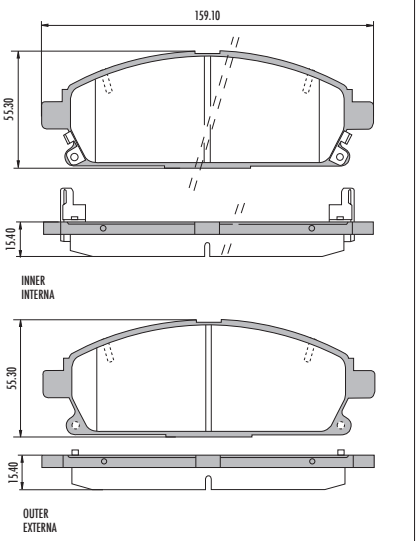

PD/1400

FMSI 8762 D1552

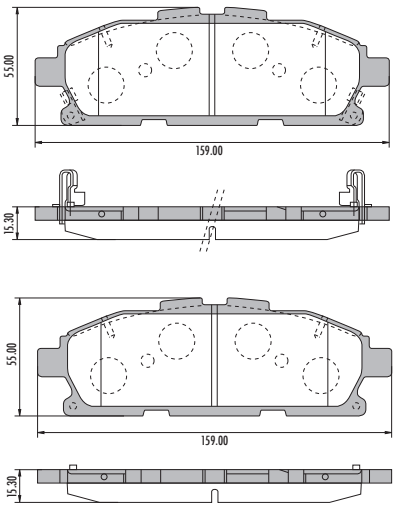

PD/568

WVA 21818
FMSI 7164A D259

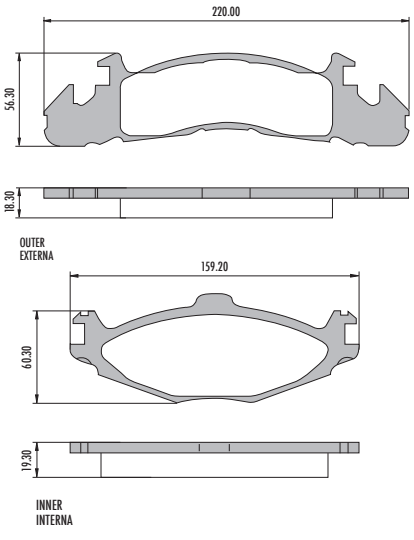

PD/422

WVA 21799

Girling System
Sistema Girling

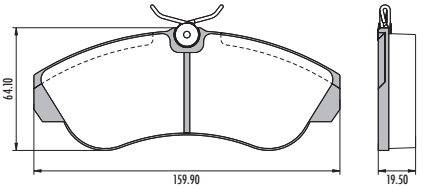

PD/422-A

WVA 21800

Girling System
Sistema Girling

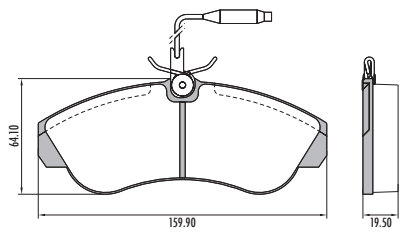

PD/605

FMSI 7224 D326

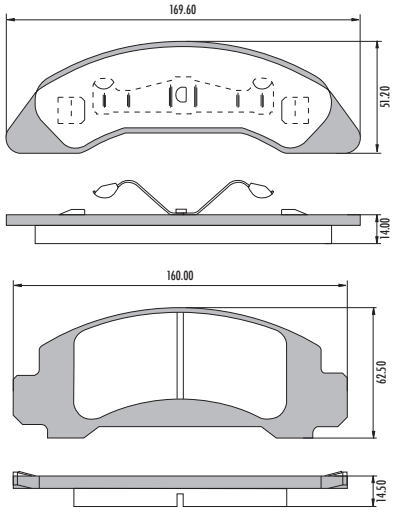

PD/438-B

WVA 23603

Girling System
Sistema Girling

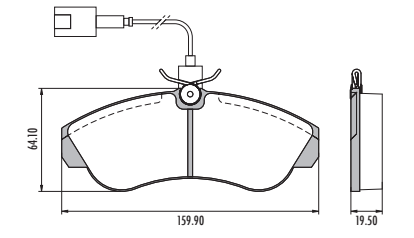

PD/57

WVA 23063 — Teves System / Sistema Teves

SHIM/ANTIRRUIDO

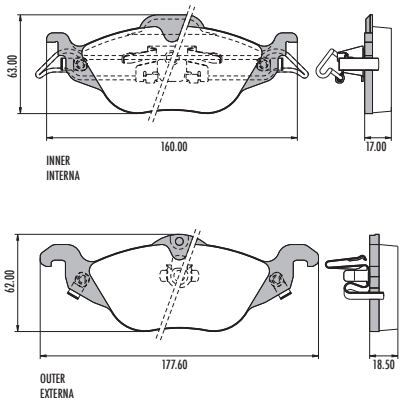

PD/1490-B

WVA 25683 / 25684
FMSI 8989 D1760

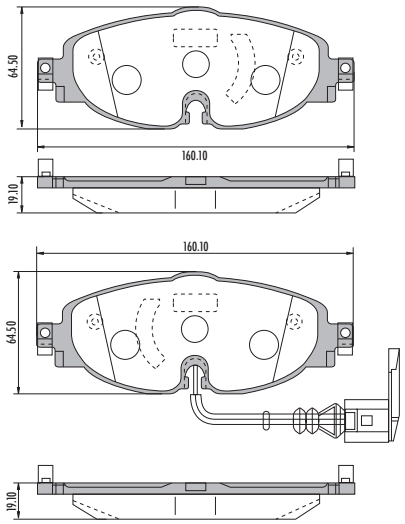

PD/374

WVA 21830
FMSI 7125A D387 — Bendix System / Sistema Bendix

SHIM/ANTIRRUIDO

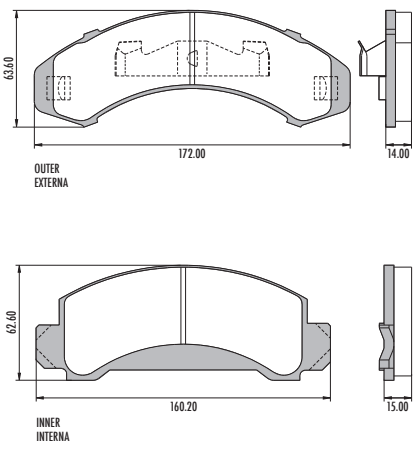

PD/513

FMSI 7125A D249

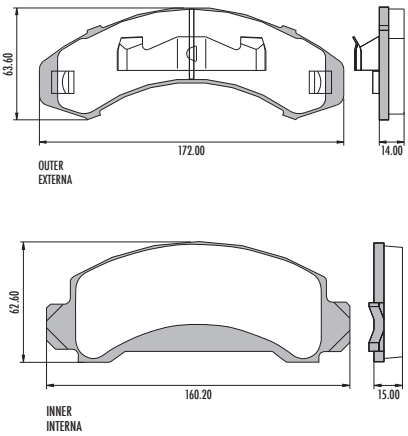

PD/427

WVA 21347 / 21348 / 21349
FMSI 7228 D333 — Akebono System / Sistema Akebono

SHIM/ANTIRRUIDO

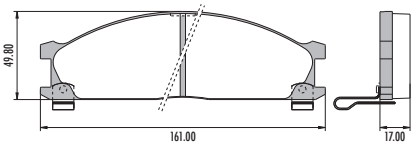

PD/567

FMSI 7594 D727

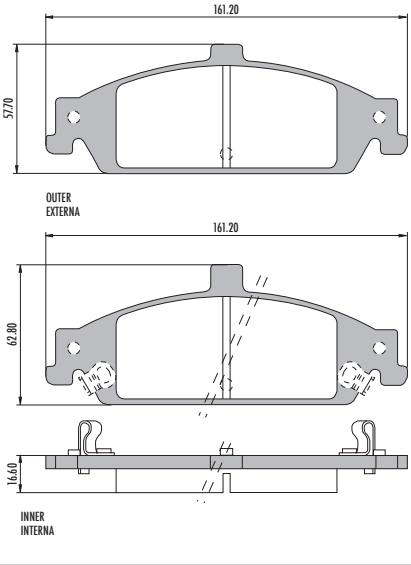

PD/714

FMSI 7620 D752

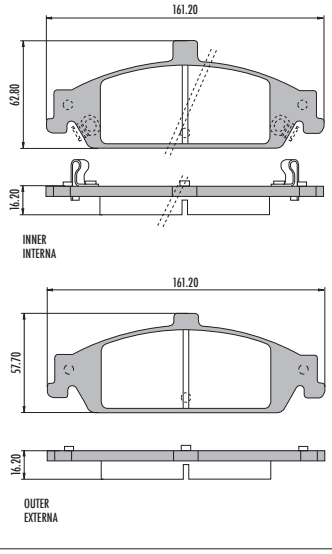

PD/772

FMSI 7735 D752

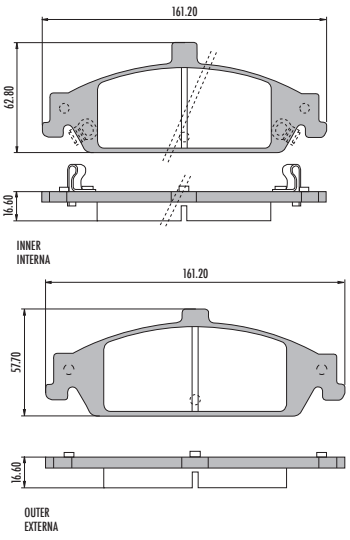

PD/1345-E

WVA 24133/ 24174
FMSI 8362 D1245 — Lucas System / Sistema Lucas

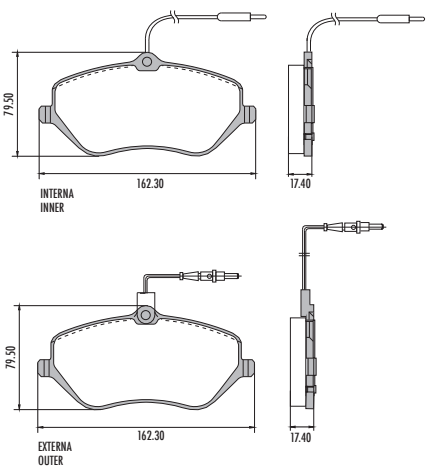

PD/1381
FMSI 8663 D1463

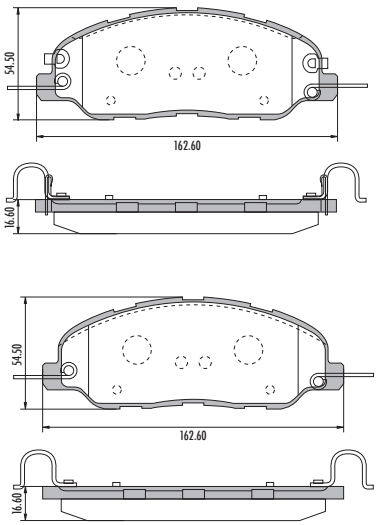

PD/1382
FMSI 7986 D1464

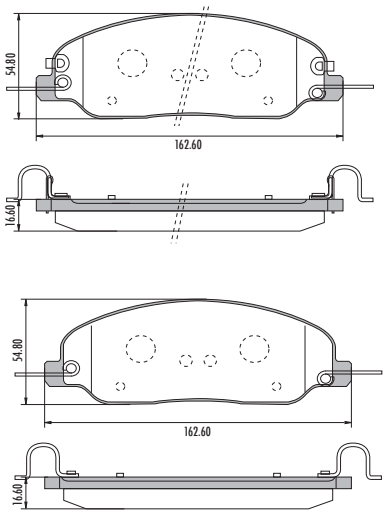

PD/1069
FMSI 8202 D1098
Girling System
Sistema Girling

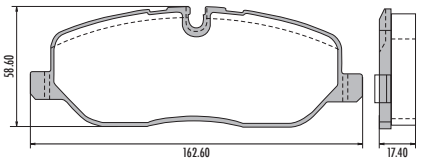

PD/814
FMSI 8269 D1159

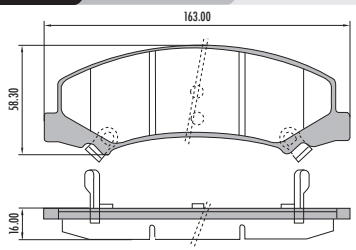

PD/662
WVA 29192
FMSI 8430 D1316
Brembo System
Sistema Brembo

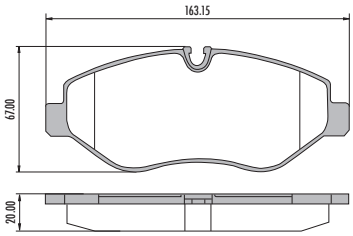

PD/1405-A
WVA 29229 / 29230
FMSI 8793 D1581

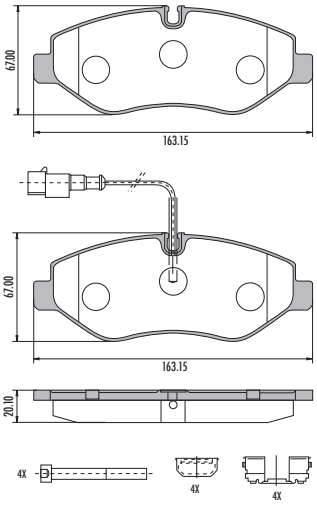

PD/1008
WVA 23423
FMSI 7676 D805

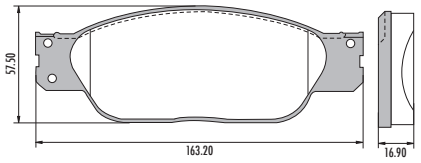

PD/189
WVA 29229
Brembo System
Sistema Brembo

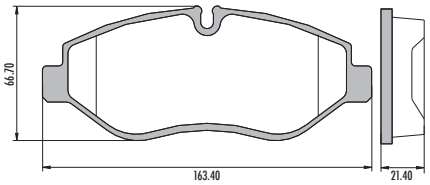

PD/189-A
Brembo System
Sistema Brembo

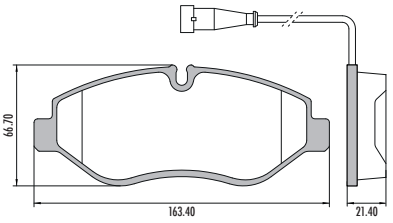

PD/811
FMSI 8200 D1094
Tokico System
Sistema Tokico

SHIM/ANTIRRUIDO

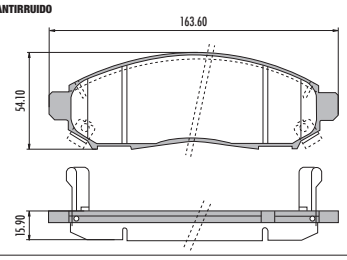

PD/1439-B
WVA 24147/ 25167

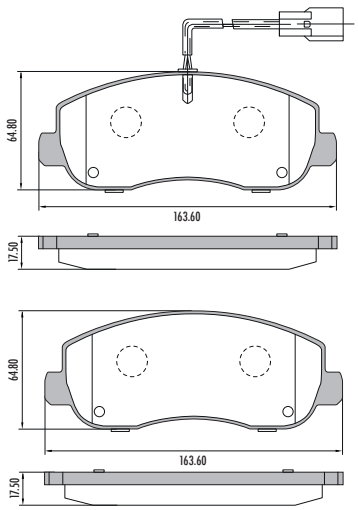

PD/105
Bendix System
Sistema Bendix

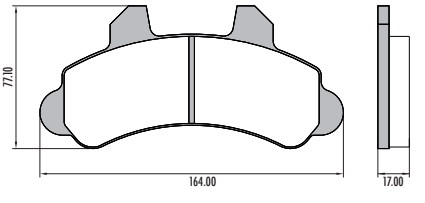

PD/106
FMSI 8328 D1208
Bendix System
Sistema Bendix

SHIM/ANTIRRUIDO

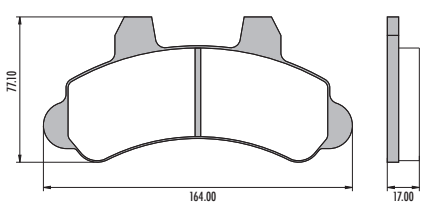

PD/103
Teves System
Sistema Teves

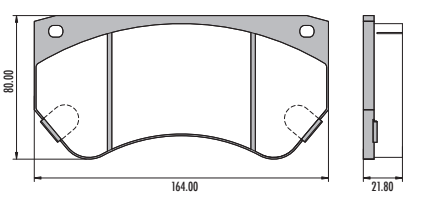

PD/542

FMSI 7106A D257

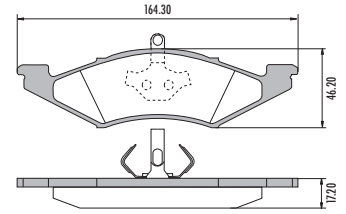

INNER
INTERNA

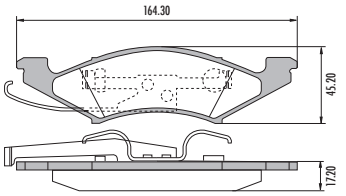

OUTER
EXTERNA

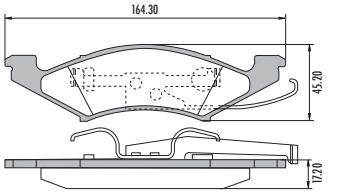

OUTER
EXTERNA

PD/575

WVA 23635
FMSI 7674 D803

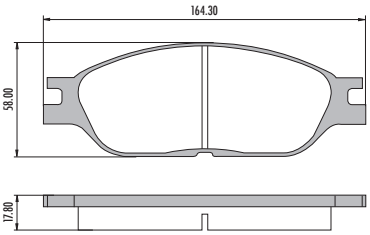

PD/1418-A

WVA 29160
FMSI 8834 D1622

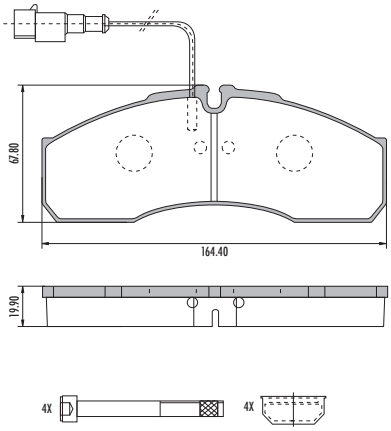

PD/504

WVA 21813
FMSI 7403A D521 - 7406 D524

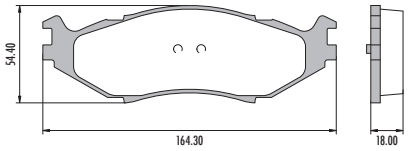

INNER
INTERNA

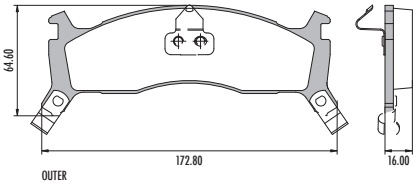

OUTER
EXTERNA

PD/534

FMSI 7876 D830

Akebono System
Sistema Akebono

SHIM/ANTIRRUIDO

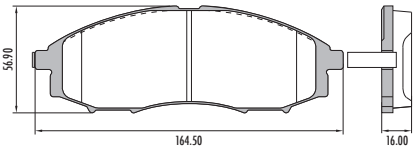

PD/536

FMSI 7703 D830

Akebono System
Sistema Akebono

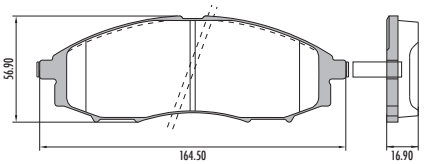

PD/208

WVA 29237

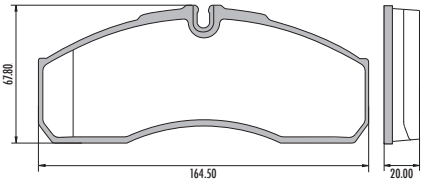

PD/510

FMSI 7623 D730

Kelsey Hayes System
Sistema Kelsey Hayes

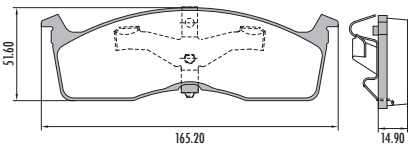

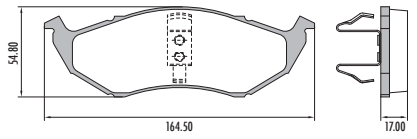

PD/492

FMSI 7518A D642

Kelsey Hayes System
Sistema Kelsey Hayes

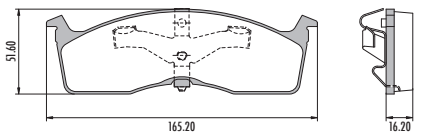

OUTER
EXTERNA

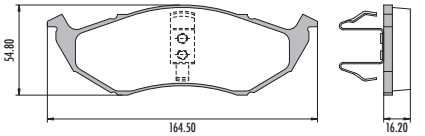

INNER
INTERNA

PD/396

WVA 23044
FMSI 7470A D591

Kelsey Hayes System
Sistema Kelsey Hayes

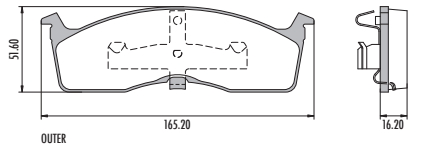

OUTER
EXTERNA

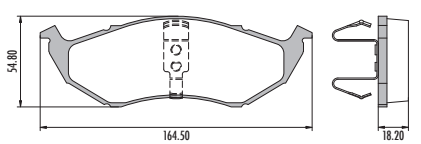

INNER
INTERNA

PD/515

FMSI 7597 D730 - 7678 D730

Kelsey Hayes System
Sistema Kelsey Hayes

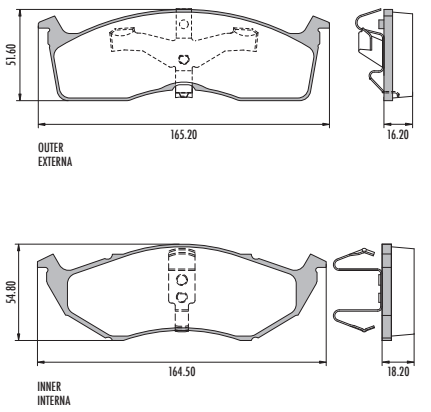

PD/1359

WVA 24609/ 24597/ 24598
FMSI 8775 D1566

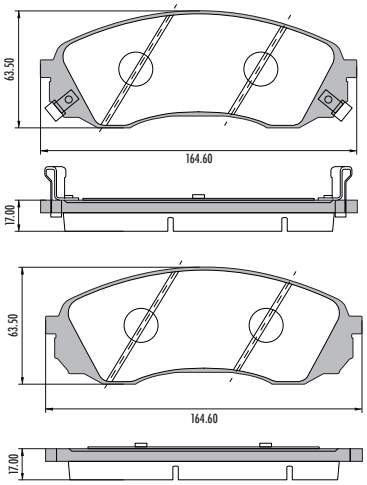

PD/122

WVA 29121/ 29357
FMSI 8835 D1487

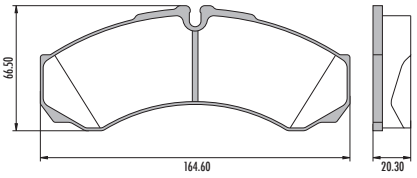

PD/122-A

Brembo System
Sistema Brembo

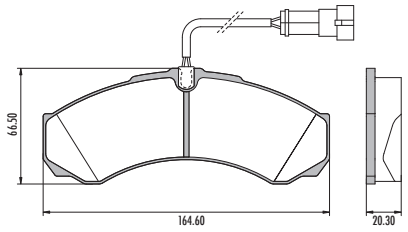

PD/188-A

WVA 29121

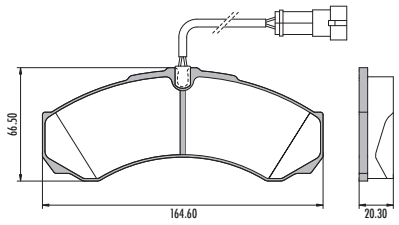

PD/111

WVA 29153
FMSI 7848 D949

Wabco Perrot System
Sistema Wabco Perrot

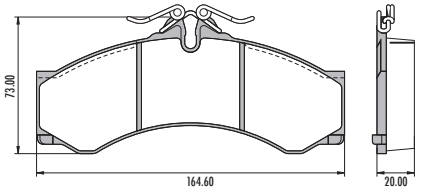

PD/111-A

WVA 29076
FMSI 7848 D949A

Wabco Perrot System
Sistema Wabco Perrot

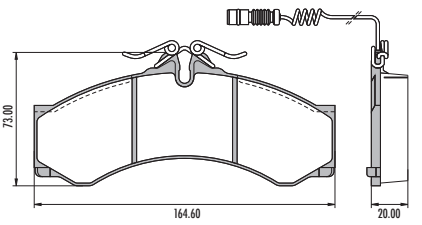

PD/121

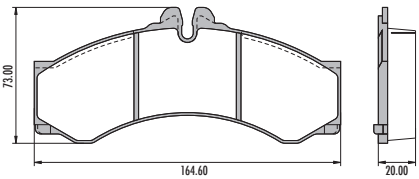

PD/121-A

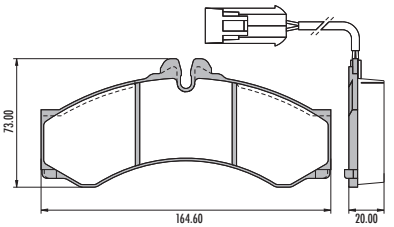

PD/652-B

WVA 23919 / 23920

Brembo System
Sistema Brembo

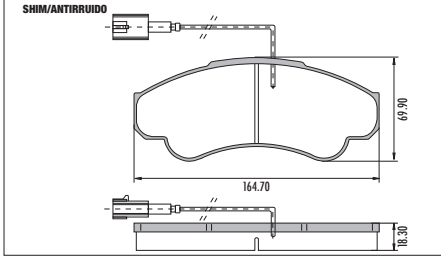

PD/553

WVA 21815 / 21817
FMSI 7404A D522

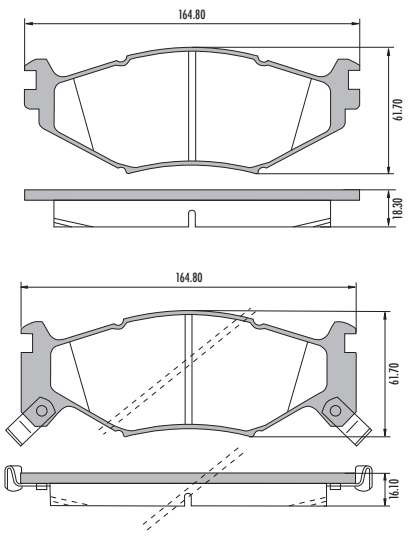

PD/1094-A

WVA 24007

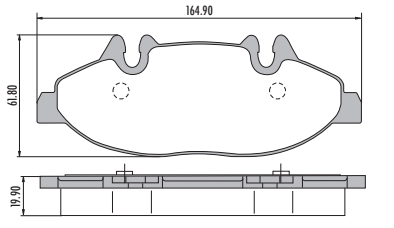

PD/664

WVA 29217
FMSI 8432 D1318

Bosch System
Sistema Bosch

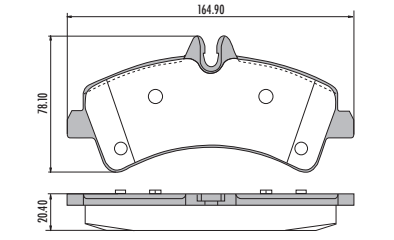

PD/665

FMSI 7979 D1074

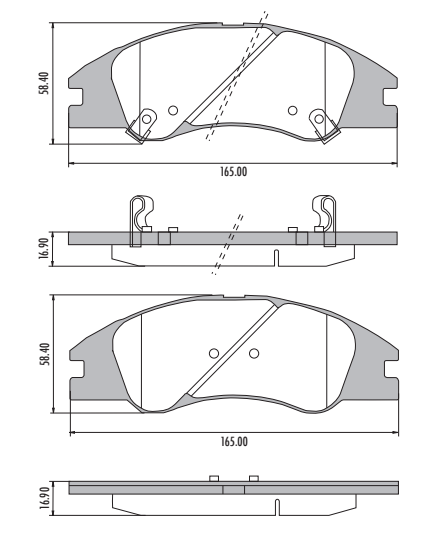

PD/1091-A

WVA 24485
FMSI 8736 D1528

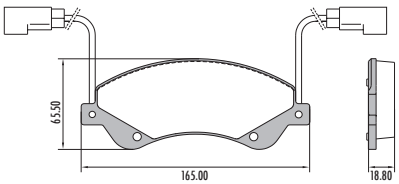

PD/1028

FMSI 8767 D1555
Bosch System
Sistema Bosch

SHIM/ANTIRRUIDO

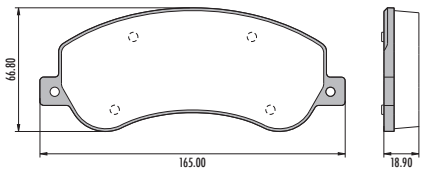

PD/1028-B

WVA 24484
FMSI 8767 D1555
Knorr System
Sistema Knorr

SHIM/ANTIRRUIDO

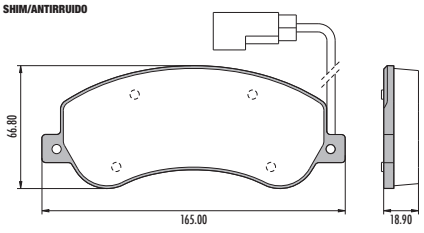

PD/618

FMSI 7617 D748

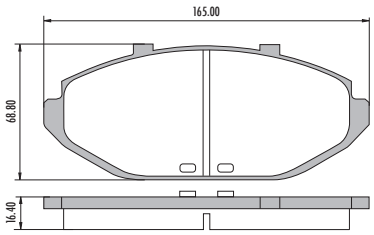

PD/395

WVA 23740
FMSI 7511A D633
Kelsey Hayes System
Sistema Kelsey Hayes

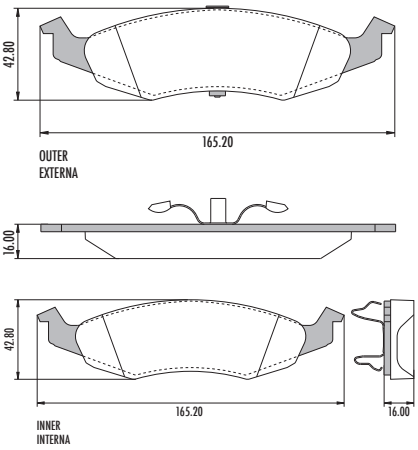

PD/545

FMSI 7179 D269

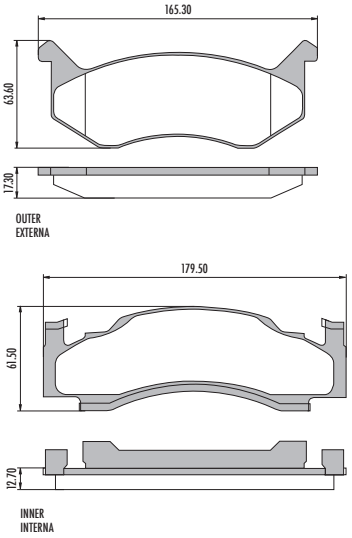

PD/537

FMSI 7019A D123

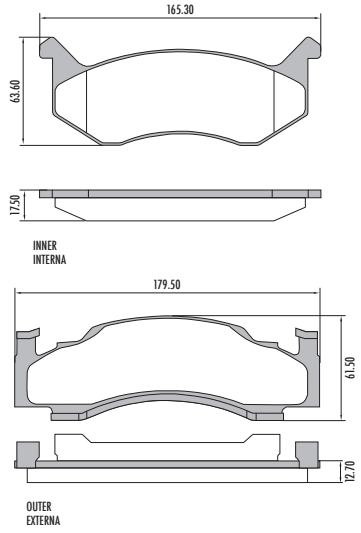

PD/1429

WVA 25588 / 25589
FMSI 8877 D1649

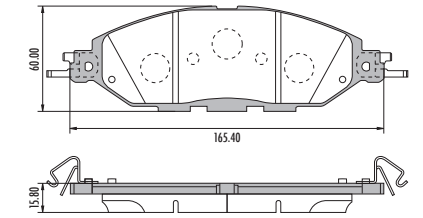

PD/584

FMSI 7775 D898

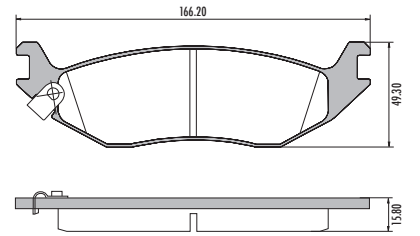

PD/366

Sumitomo System
Sistema Sumitomo

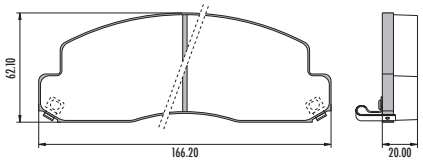

PD/759

FMSI 7867 D967

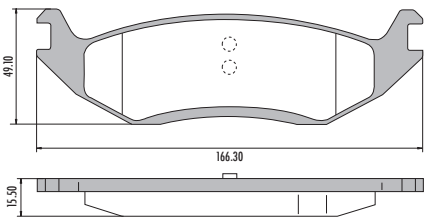

PD/137

WVA 24757/ 24758/ 24759
FMSI 7558 D679
Wagner System
Sistema Wagner

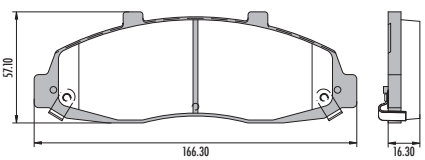

PD/1066

FMSI 7949 D1046

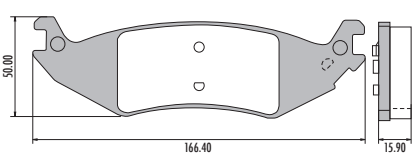

PD/108

WVA 29071
Bendix System
Sistema Bendix

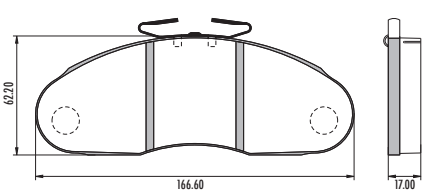

PD/776

FMSI 7593 D726

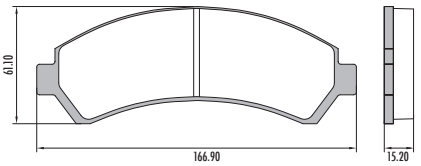

PD/110

WVA 23663
FMSI 7593 D726
Teves System
Sistema Teves

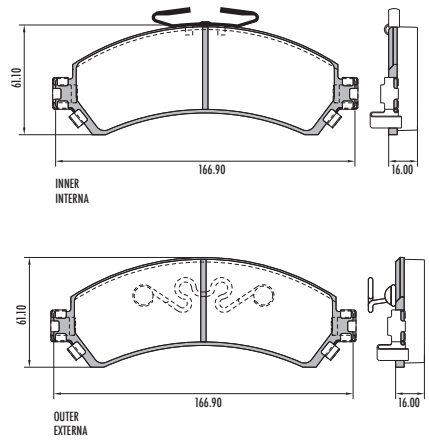

PD/650-E

WVA 23273
Bosch System
Sistema Bosch

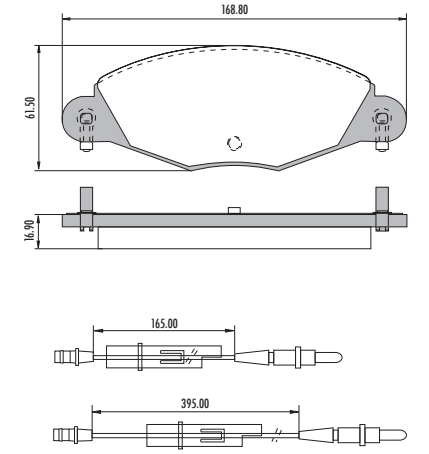

PD/1099-B

WVA 24468 / 24469
FMSI 8689 D1489
Brembo System
Sistema Brembo

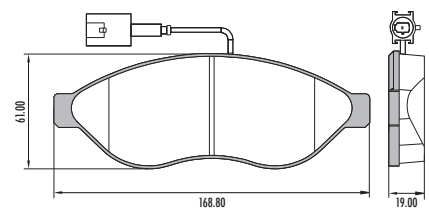

PD/661

WVA 29200
FMSI 8383 D1268
Brembo System
Sistema Brembo

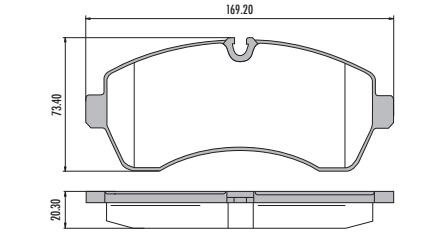

PD/801

WVA 24370/24594
FMSI 7943 D1039

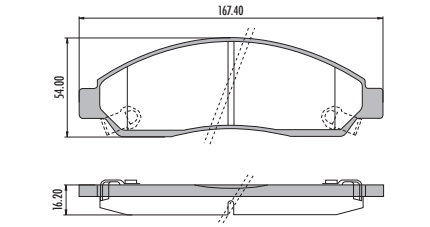

PD/597

FMSI 8310 D1191

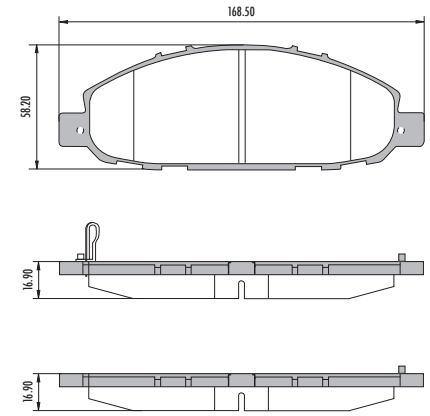

PD/471-A

WVA 23230 / 23231 / 23232 / 23233
Girling System
Sistema Girling

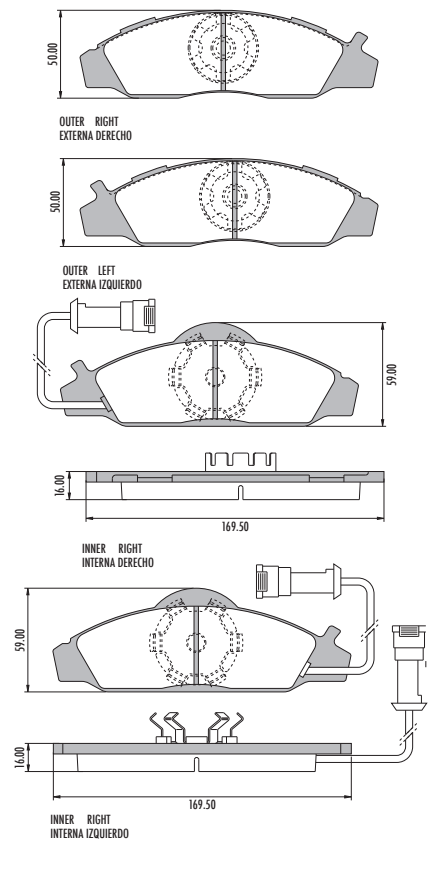

PD/1032

FMSI 7300 D412

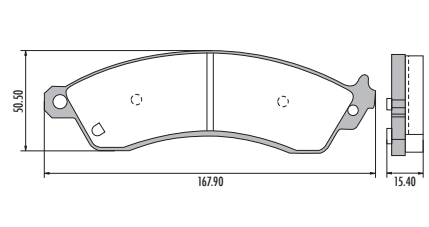

PD/342

WVA 23434
Bosch System
Sistema Bosch

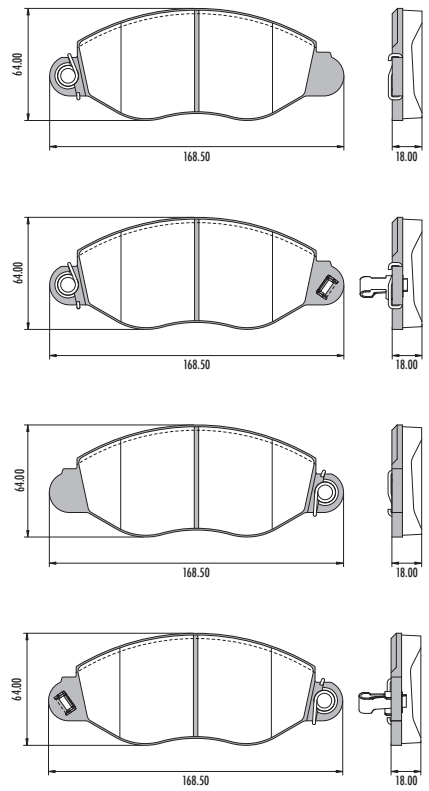

PD/1397-B

WVA 24466
FMSI 8748 D1540

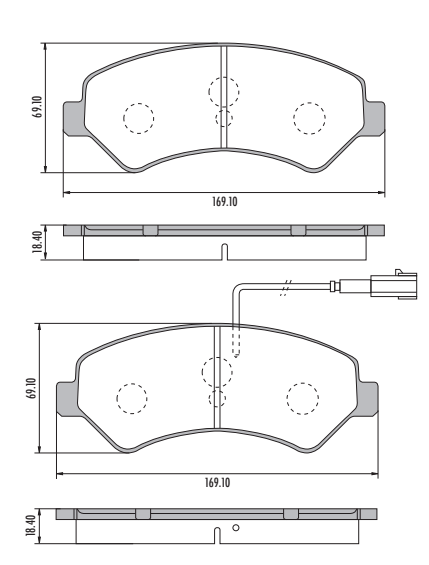

PD/1390

FMSI 8403 D1509

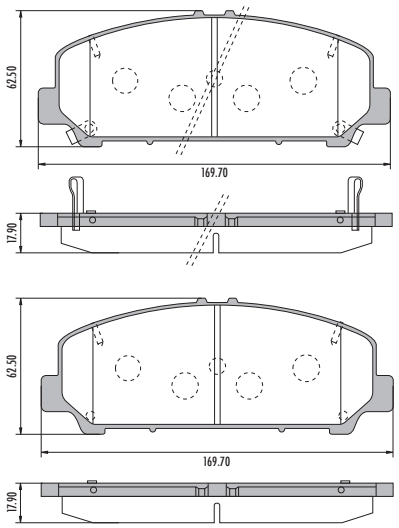

PD/1452

WVA 24170/ 24171
FMSI 8411 D1294

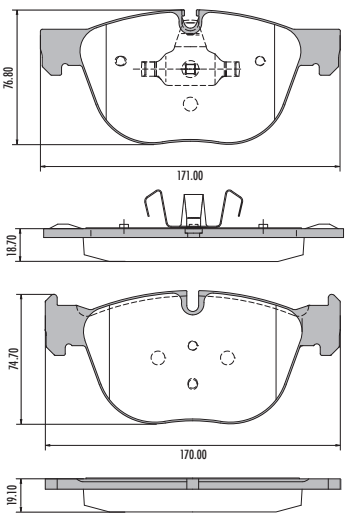

PD/803

FMSI 7950 D1047

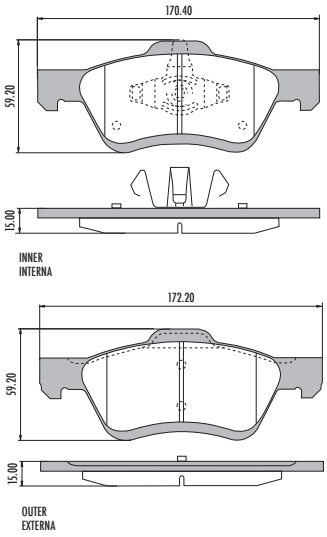

PD/581

WVA 23640 / 23642
FMSI 7733 D857

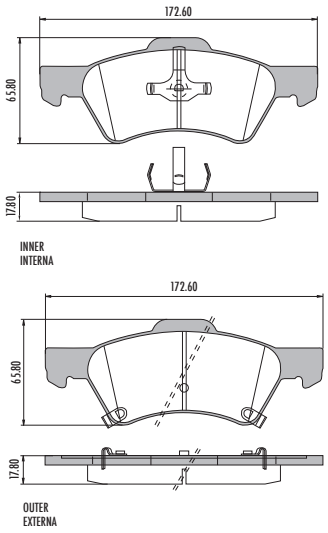

PD/1015

FMSI 7875 D974

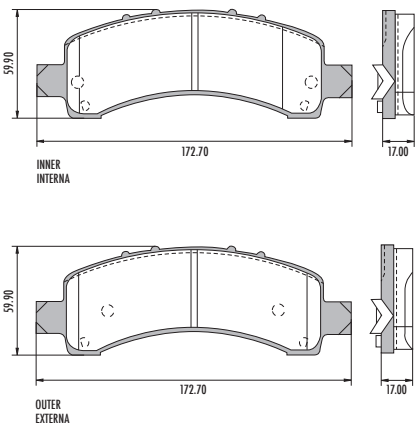

PD/589

FMSI 7881 D974

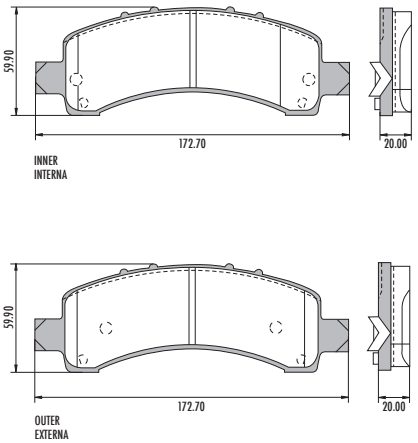

PD/533

WVA 29148 / 29115/ 29183
Knorr System
Sistema Knorr

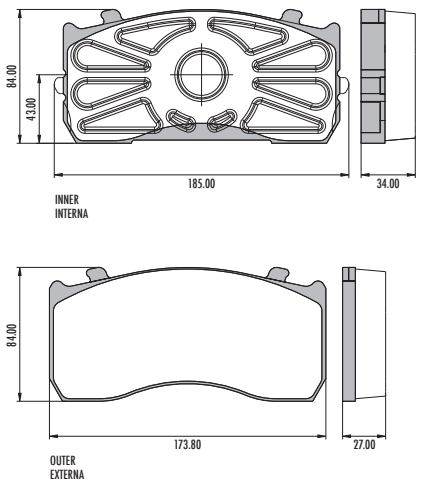

PD/526

WVA 29116 / 29115
Knorr System
Sistema Knorr

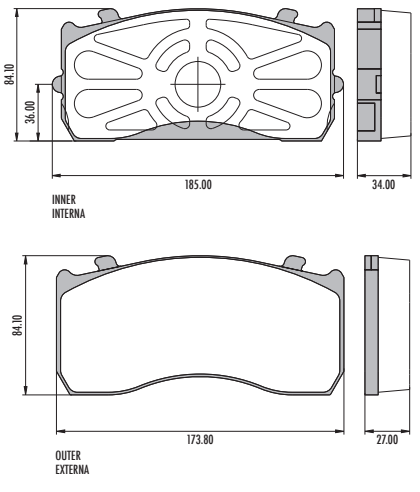

PD/339-A

WVA 29107
Perrot System
Sistema Perrot

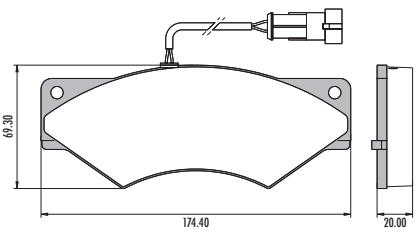

PD/420

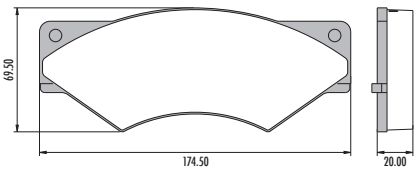

PD/420-A
WVA 29001 — Perrot System / Sistema Perrot

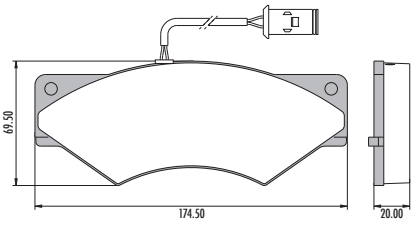

PD/139
WVA 29122 — Brembo System / Sistema Brembo

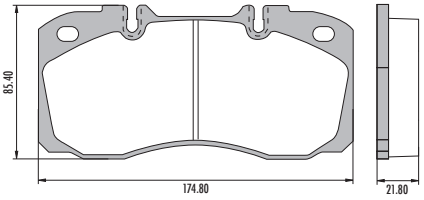

PD/104
WVA 29835 — FMSI 7968 D1062 — Girling System / Sistema Girling

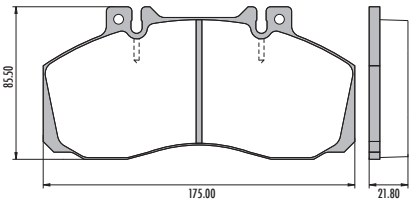

PD/104-A
FMSI 7968 D1062A — Girling System / Sistema Girling

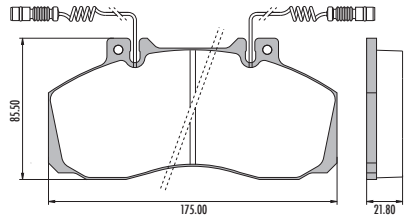

PD/355
WVA 29065 — Meritor System / Sistema Meritor

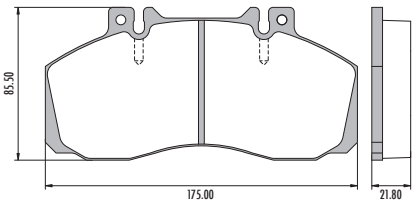

PD/113
Bosch System / Sistema Bosch

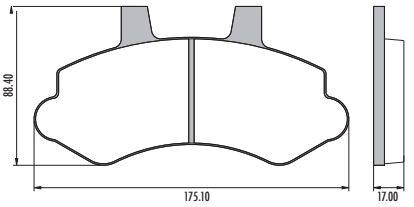

PD/154
WVA 29302 — FMSI 7816 D442 — Meritor System / Sistema Meritor

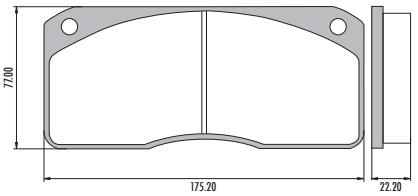

PD/123
WVA 29067 — FMSI 7931 D1027 — Meritor System / Sistema Meritor

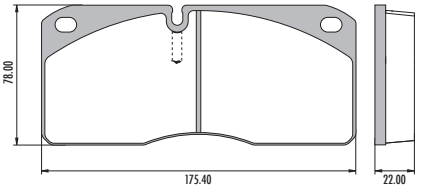

PD/1424
WVA 25562 — FMSI 7974 D1631

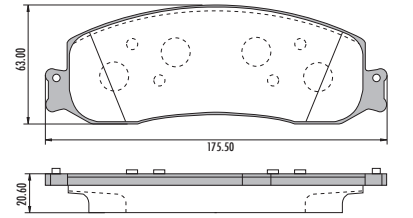

PD/117
WVA 29117 — FMSI 8727 D1518 — Wabco Perrot System / Sistema Wabco Perrot

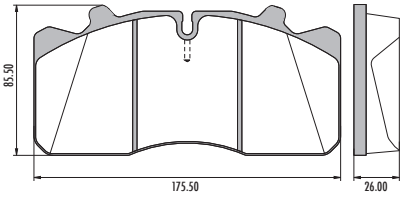

PD/117-A
Wabco Perrot System / Sistema Wabco Perrot

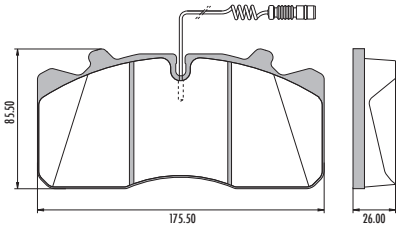

PD/124
WVA 29088/ 29091 — FMSI 8727 D1518 — Wabco Perrot System / Sistema Wabco Perrot

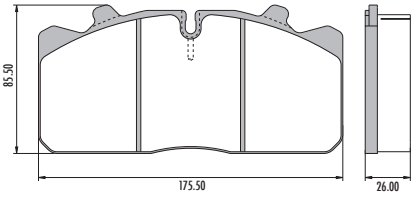

PD/159
WVA 29136 — Meritor System / Sistema Meritor

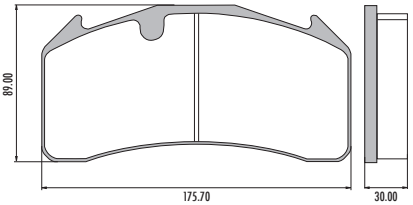

PD/590
FMSI 7915 D1011 - 7915 D1083

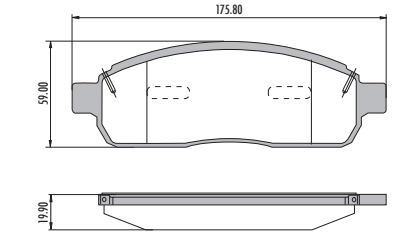

PD/779
FMSI 7410 D529

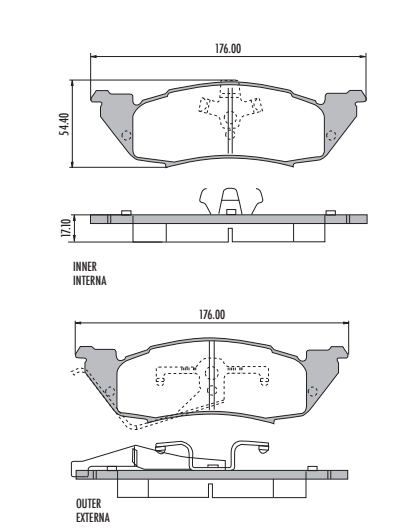

PD/1450
WVA 23961 — FMSI 8421 D1130

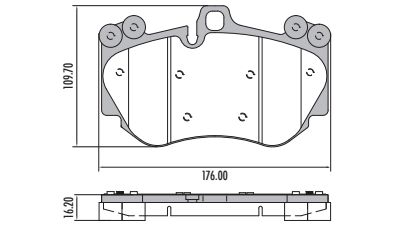

PD/1019
FMSI 7918 D1015

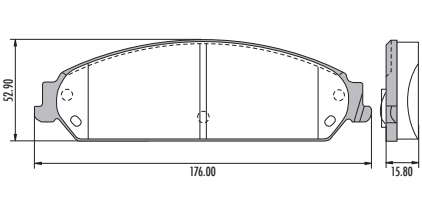

PD/807
FMSI 7985 D1080

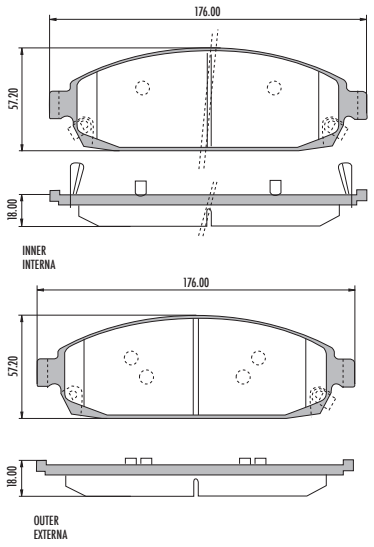

PD/737
FMSI 7759 D882

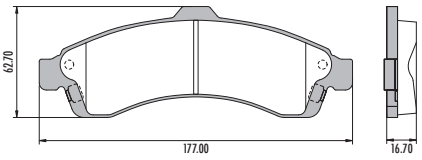

PD/135
WVA 23318
FMSI 7530A D650
Kelsey Hayes System
Sistema Kelsey Hayes

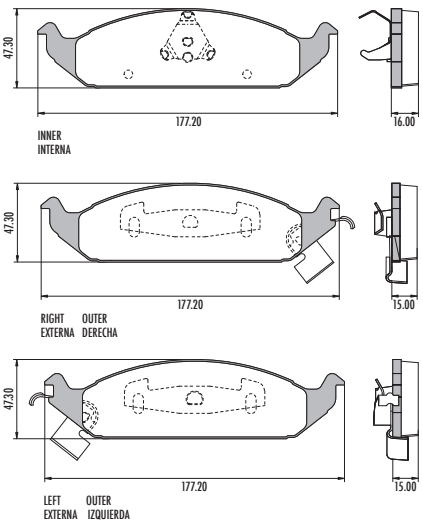

PD/1006
FMSI 7575 D701

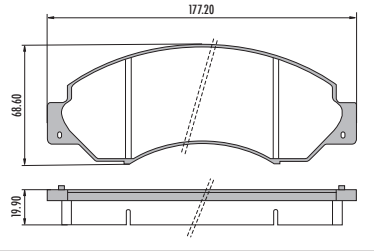

PD/140-A
WVA 29039
Meritor System
Sistema Meritor

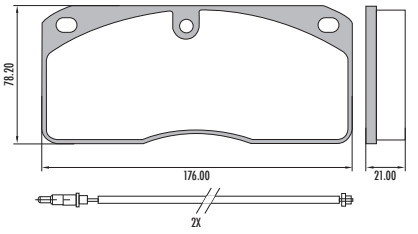

PD/418
WVA 21822
FMSI 7358 D712
Kelsey Hayes System
Sistema Kelsey Hayes

SHIM/ANTIRRUIDO

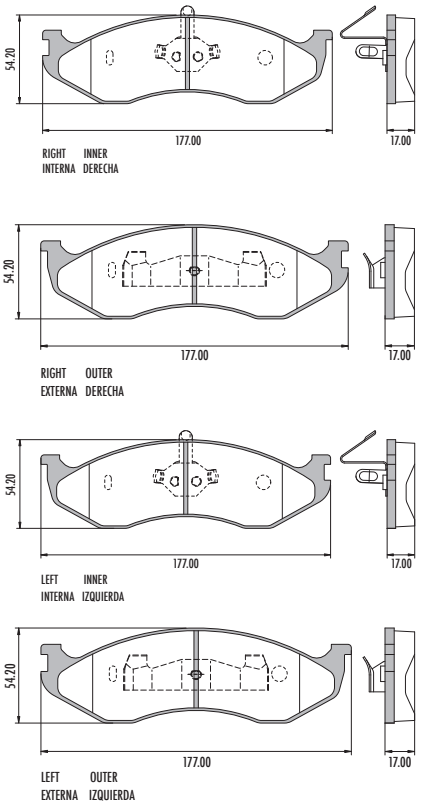

PD/656
FMSI 7527 D646

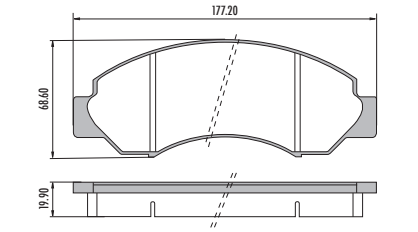

PD/642
FMSI 7973 D1068

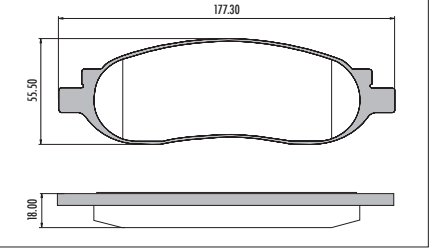

PD/152
WVA 29055
Wabco System
Sistema Wabco

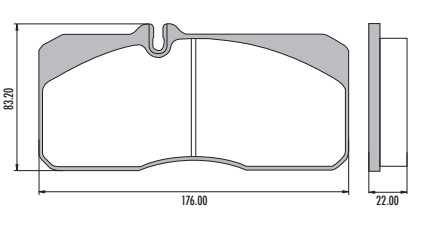

PD/708
FMSI 7358 D477
Kelsey Hayes System
Sistema Kelsey Hayes

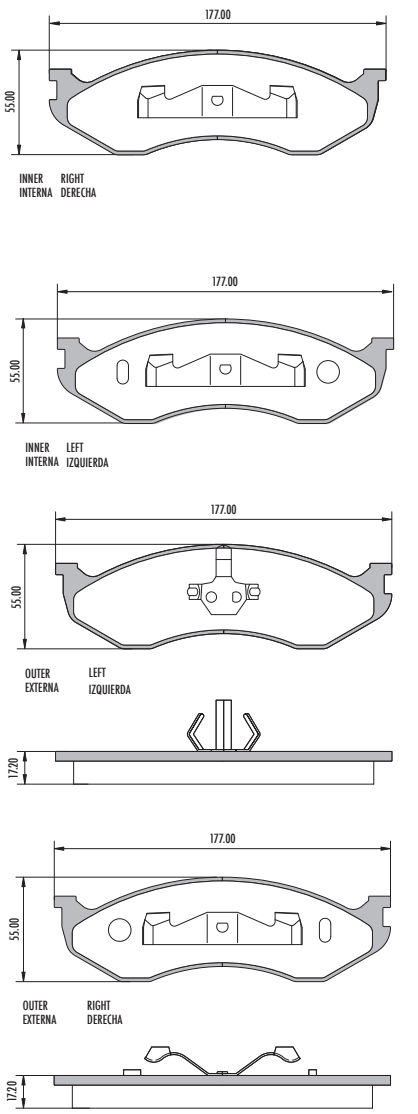

PD/800
FMSI 7927 D1022

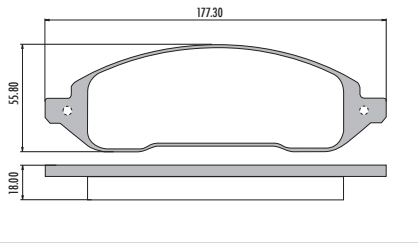

PD/643
FMSI 7974 D1069

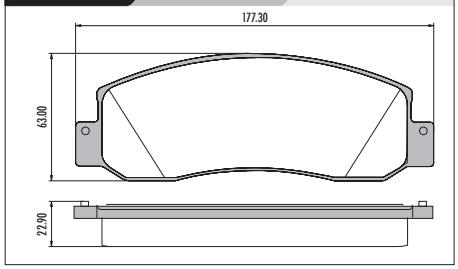

PD/641
FMSI 7973 D1067

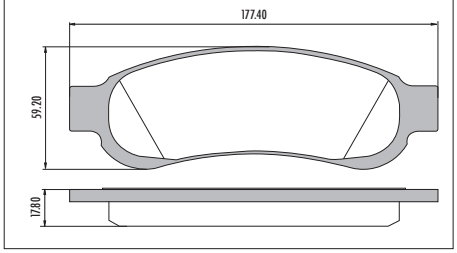

PD/572
FMSI 7653 D785

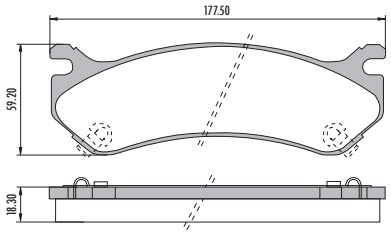

PD/808
FMSI 7991 D1084

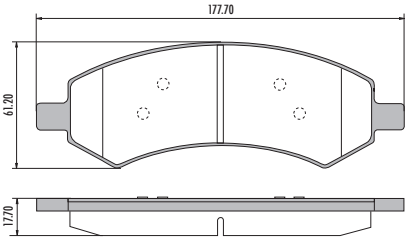

PD/1367
WVA 25153 / 25154 / 25155

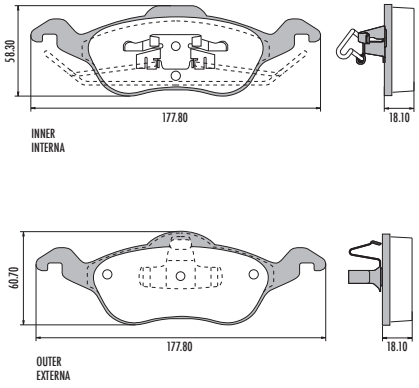

PD/442
WVA 23154
FMSI 7690 D816
Teves System
Sistema Teves

SHIM/ANTIRRUIDO

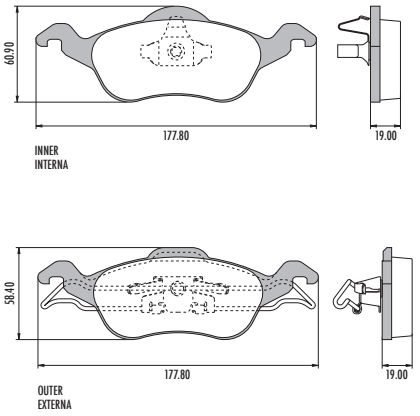

PD/1411
FMSI 8924 D1700
Akebono System
Sistema Akebono

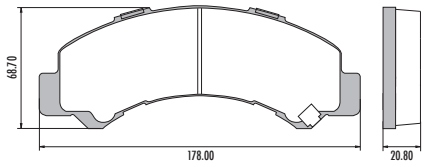

PD/1024
FMSI 8410 D1169

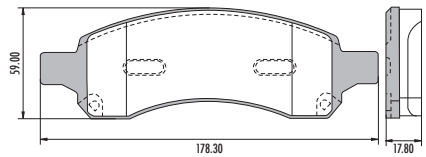

PD/1414
WVA 25449 / 25450
FMSI 8824 D1611

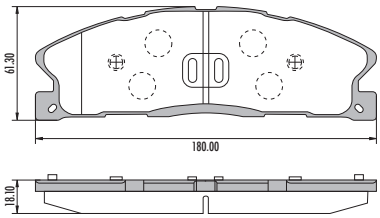

PD/169-E
WVA 29097
See System
Sistema See

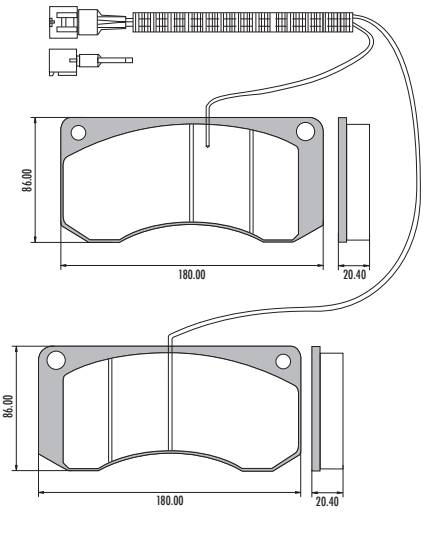

PD/155-E
WVA 29013
See System
Sistema See

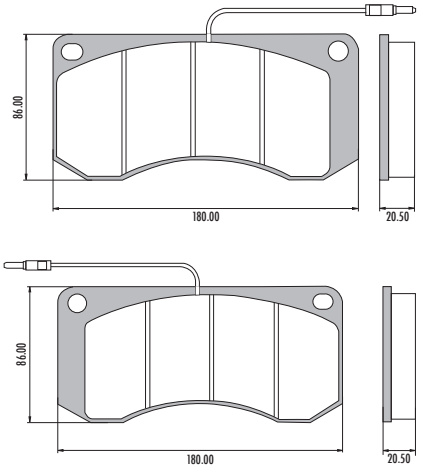

PD/1427
WVA 25555 / 25556
FMSI 8873 D1645

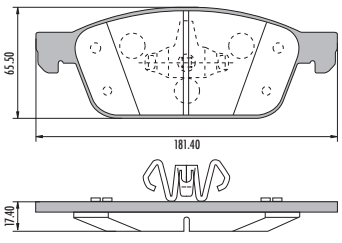

PD/747
FMSI 7822 D921

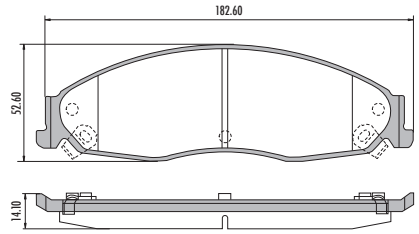

PD/713
FMSI 7618 D749

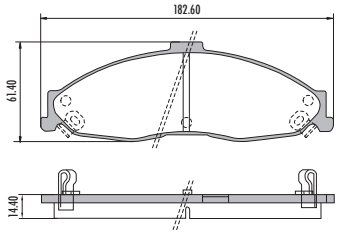

PD/541
FMSI 7081 D149

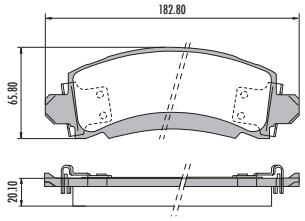

INNER
INTERNA

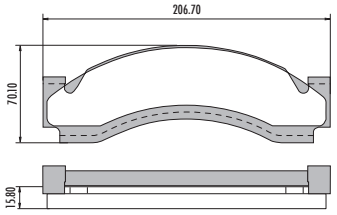

OUTER
EXTERNA

PD/606
FMSI 7280A D392

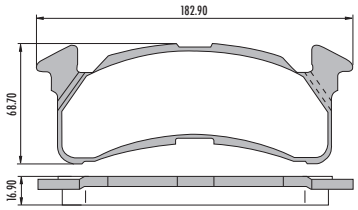

INNER
INTERNA

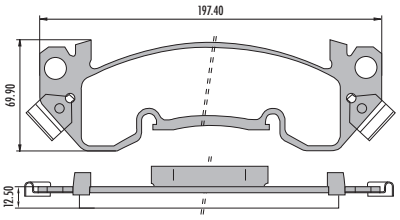

OUTER
EXTERNA

PD/436
FMSI 7946 D1043

Girling System
Sistema Girling

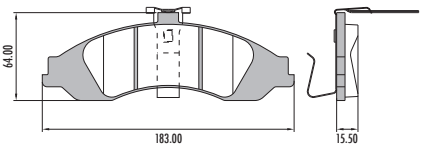

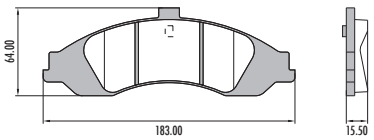

PD/655
FMSI 7425 D675

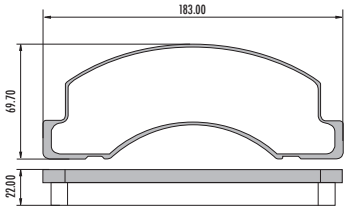

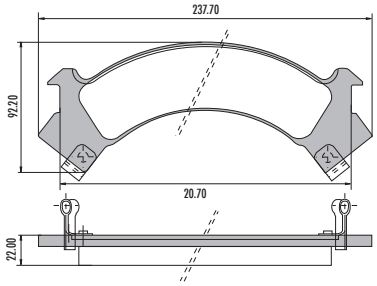

PD/1408
WVA 25378 / 25379
FMSI 8800 D1589

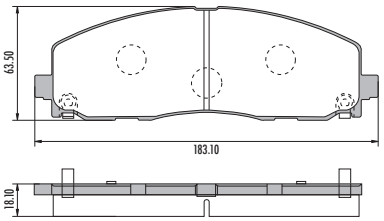

PD/1020
FMSI 7965 D1058

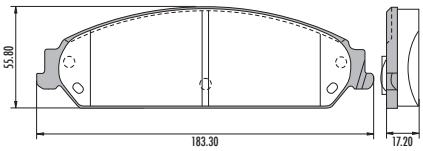

PD/1004
FMSI 7425 D546

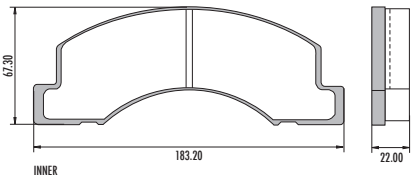

INNER
INTERNA

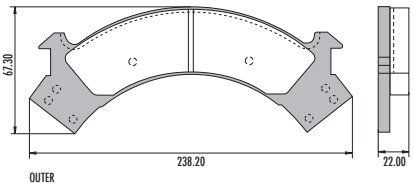

OUTER
EXTERNA

PD/1001
FMSI 7084A D153

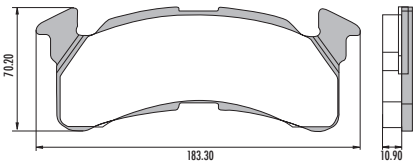

INNER
INTERNA

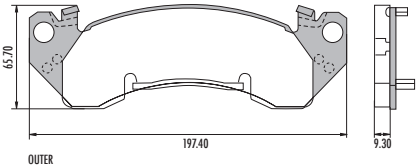

OUTER
EXTERNA

PD/722
FMSI 7675 D804

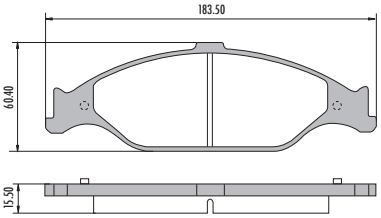

INNER
INTERNA

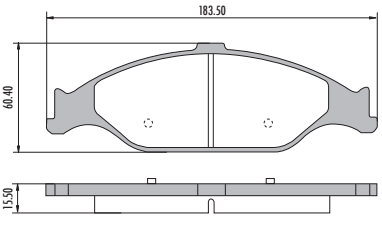

OUTER
EXTERNA

PD/578
FMSI 7707 D834

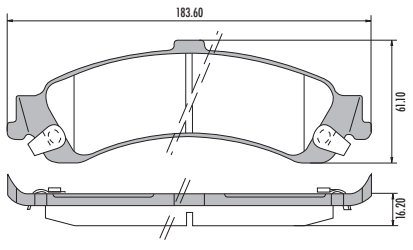

PD/760
FMSI 7707 D975

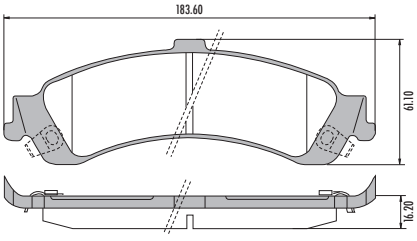

PD/774

WVA 20215
FMSI 7214A D52

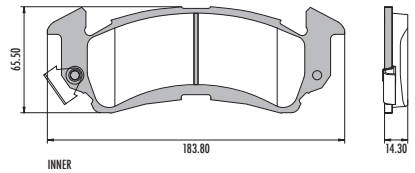

INNER
INTERNA

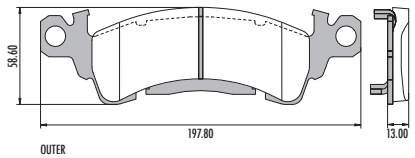

OUTER
EXTERNA

PD/763

FMSI 7898 D997

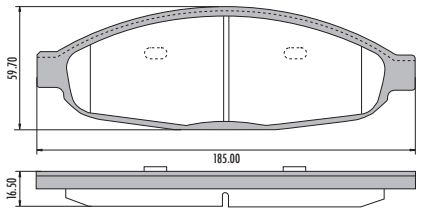

PD/770

FMSI 7852 D953

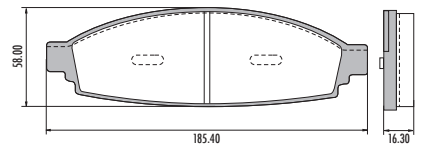

PD/1040

FMSI 7475 D597

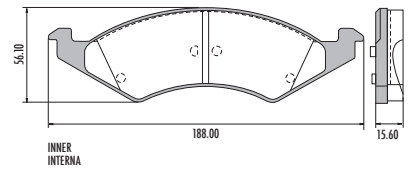

INNER
INTERNA

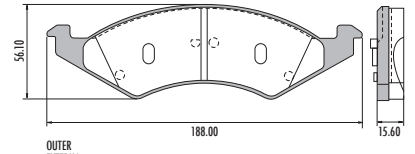

OUTER
EXTERNA

PD/201

WVA 29231
Brembo System
Sistema Brembo

SHIM/ANTIRRUIDO

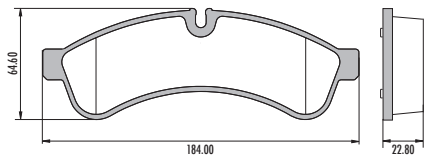

PD/324

FMSI 728A D52
Girling System
Sistema Girling

SHIM/ANTIRRUIDO

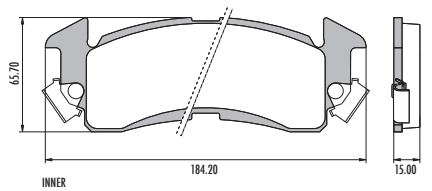

INNER
INTERNA

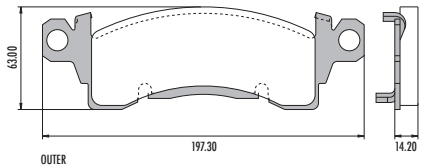

OUTER
EXTERNA

PD/1464

WVA 24452/ 24721
FMSI 8643 D1453

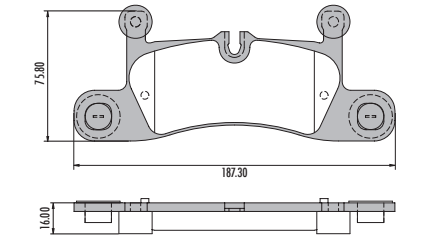

PD/594

FMSI 7997 D1092

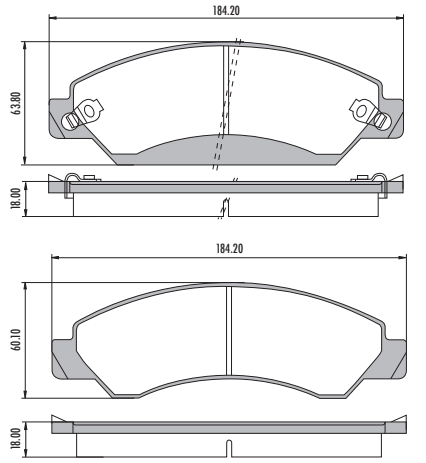

PD/348

FMSI 7834 D931

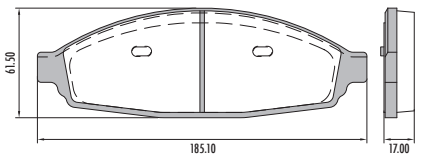

PD/1033

FMSI 7304A D417

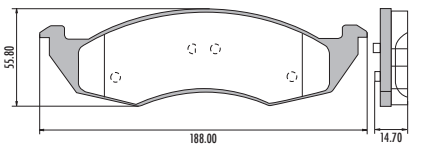

INNER
INTERNA

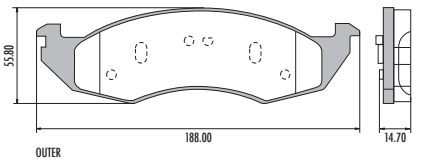

OUTER
EXTERNA

PD/1007-A

WVA 23193
FMSI 7628 D760

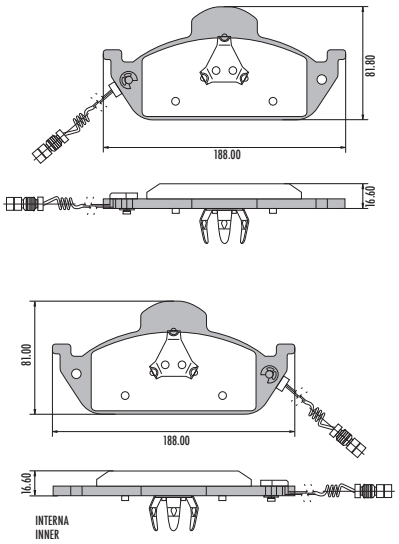

PD/1454

WVA 24409/ 24743
FMSI 8434 D1322

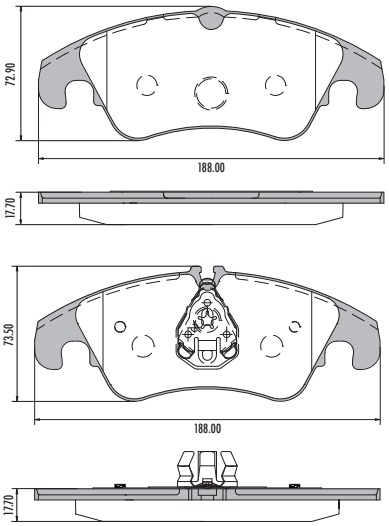

PD/1455

WVA 24310/ 24456
FMSI 8453 D1342

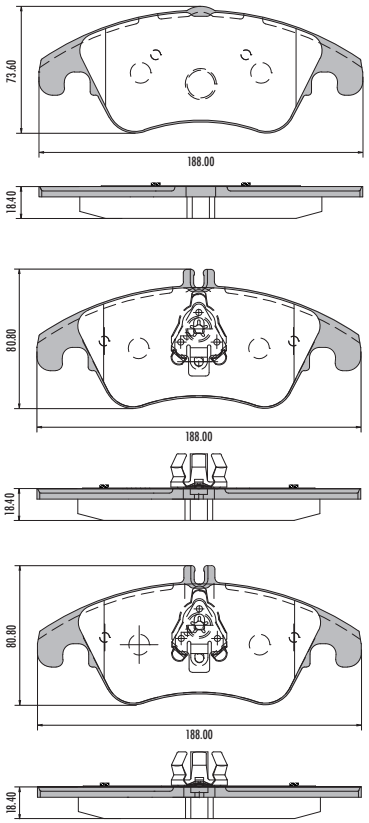

PD/555

FMSI 7456 D576

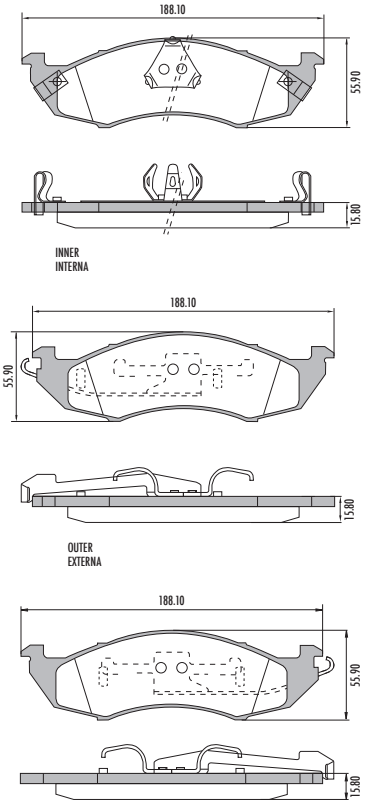

PD/622

FMSI 7673 D802
Kalsey Halsey System
Sistema Kalsey Hayes

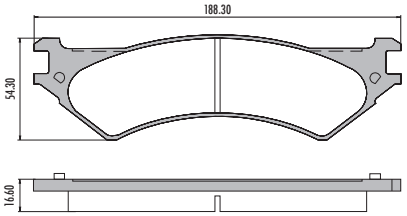

PD/569

FMSI 7627 D758

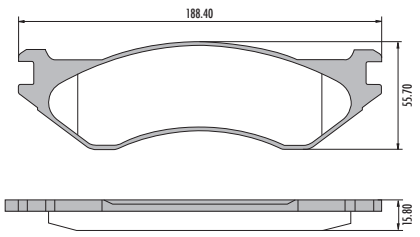

PD/565

FMSI 7576 D702

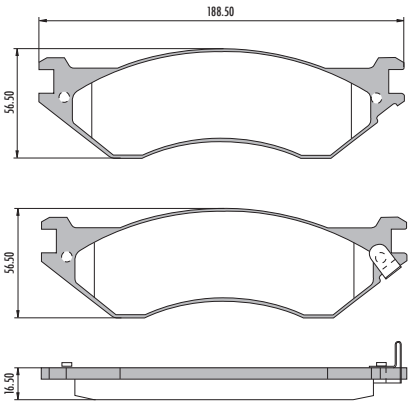

PD/1057

FMSI 7752 D1096

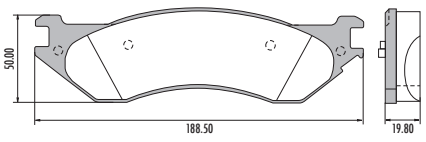

PD/583

FMSI 7774 D897

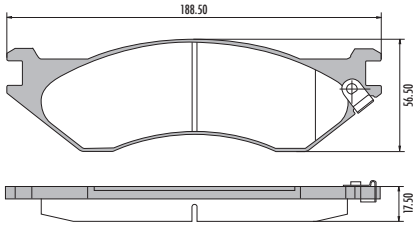

PD/757
FMSI 7866 D966

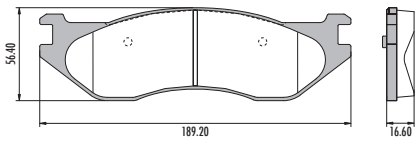

PD/758
FMSI 7868 D966

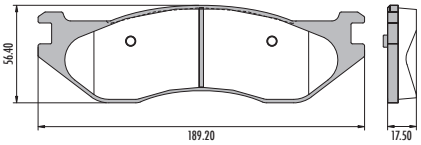

PD/1460
WVA 24659
FMSI 8543 D1426

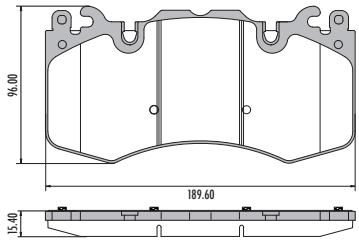

PD/1079
FMSI 8366 D1014

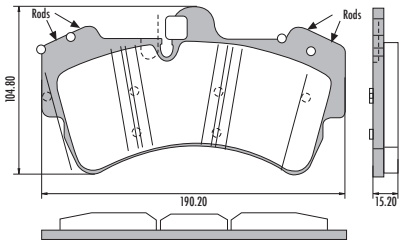

PD/1064
FMSI 7911 D1007

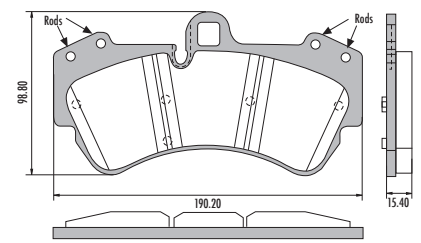

PD/148
WVA 29017
FMSI 7817 D494
Wabco System
Sistema Wabco

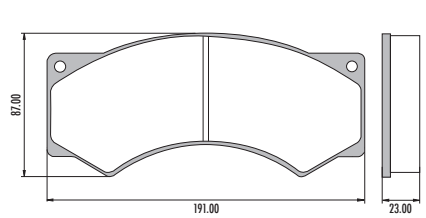

PD/148-A
WVA 29024
Wabco System
Sistema Wabco

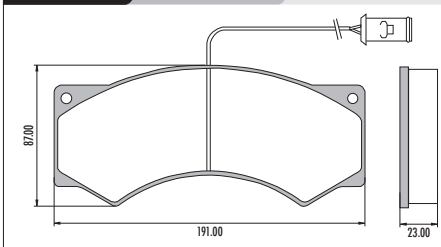

PD/193-A
WVA 29029
Wabco System
Sistema Wabco

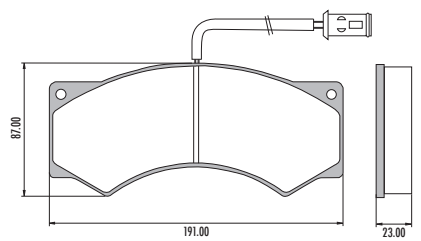

PD/485
FMSI 7616 D746
Kelsey Hayes System
Sistema Kelsey Hayes

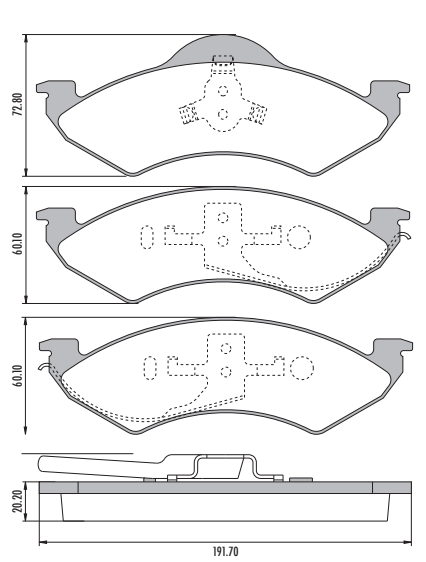

PD/623
FMSI 7616 D820

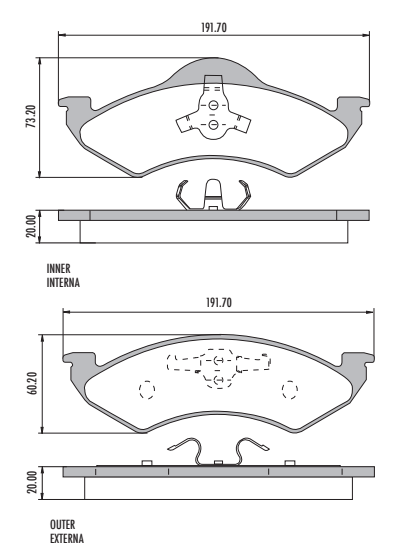

PD/608
FMSI 7330 D450

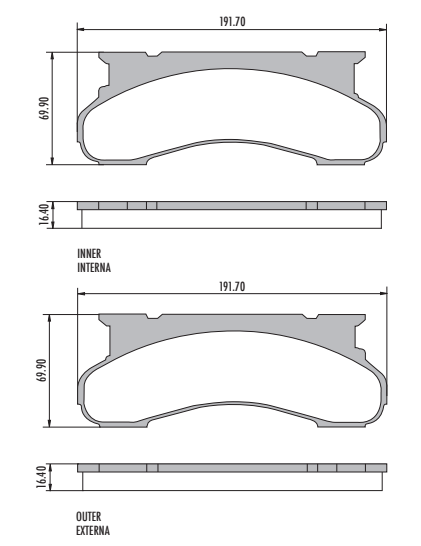

PD/539
FMSI 7054 D120

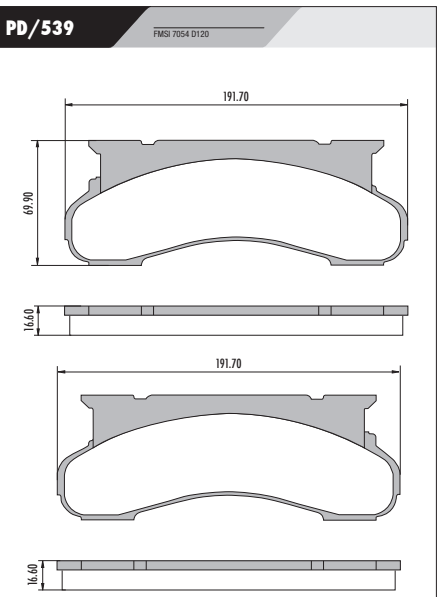

PD/620

WVA 23631 / 23336
FMSI 7660 D790

Teves System
Sistema Teves

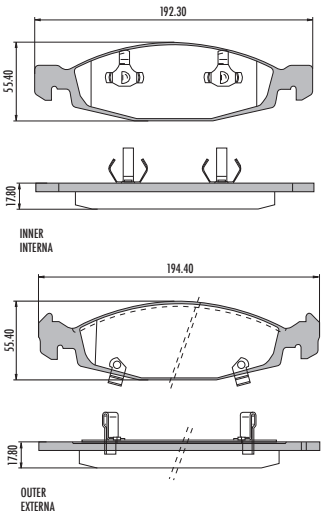

PD/1458

WVA 24172/ 24173
FMSI 8490 D1381

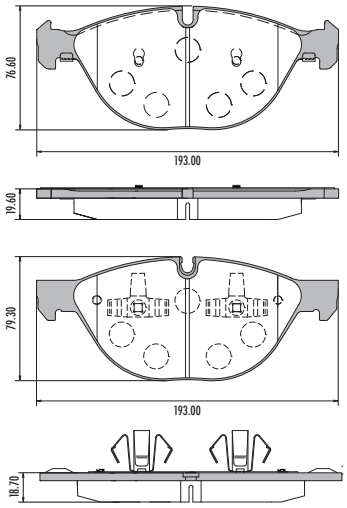

PD/1374

WVA 25158 / 25159
FMSI 8758 D1549

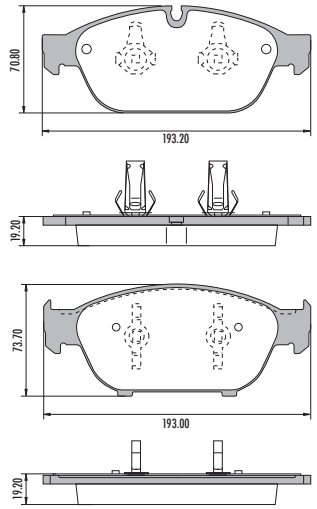

PD/62

FMSI 7625 D756 - 7625 D824

Bosch System
Sistema Bosch

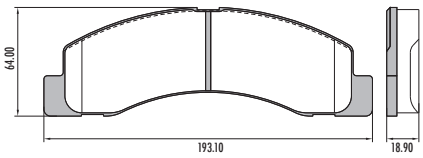

PD/1449-A

WVA 23885/ 23896/ 23897
FMSI 7928 D1024/ 1117

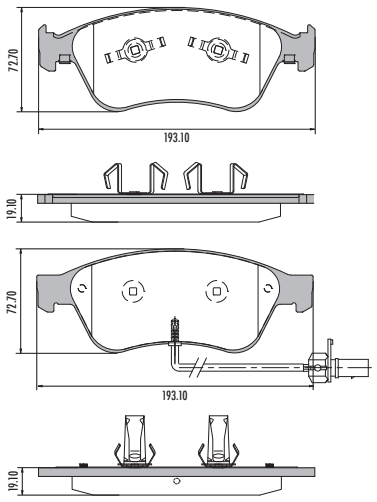

PD/1459

WVA 24399/ 24875
FMSI 8525 D1412

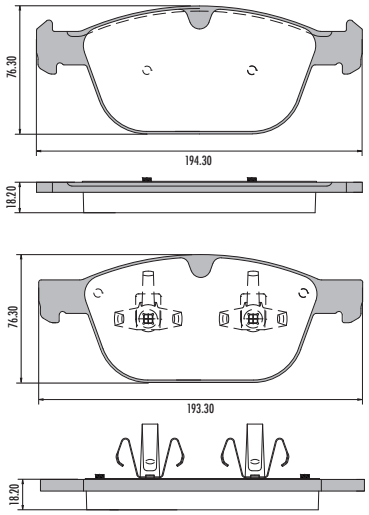

PD/1354

FMSI 8655 D1455

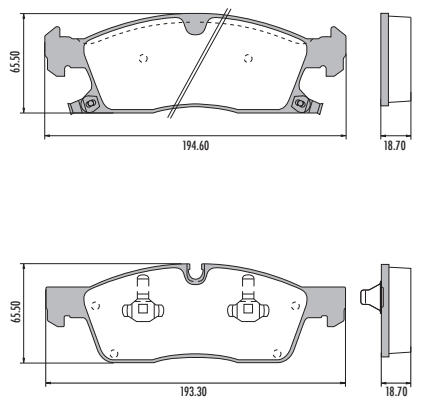

PD/356

FMSI 7503 D632

Kelsey Hayes System
Sistema Kelsey Hayes

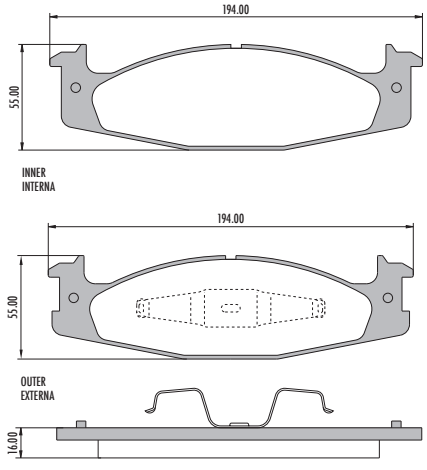

PD/1434

WVA 25632 / 25633 / 25634
FMSI 8905 D1676

Fomoco System
Sistema Fomoco

SHIM/ANTIRRUIDO

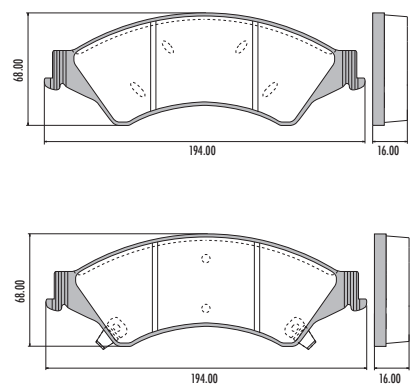

PD/156

WVA 29032

Bendix System
Sistema Bendix

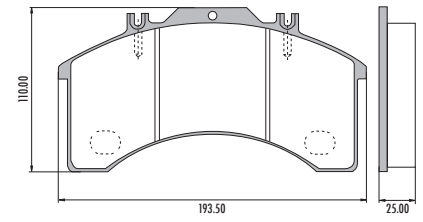

PD/1472
WVA 21484/ 21485
FMSI 7561 D682

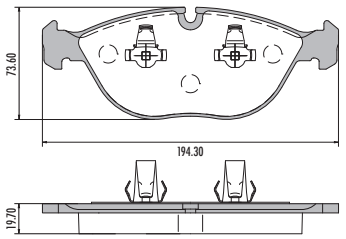

PD/1389
FMSI 8715 D1508

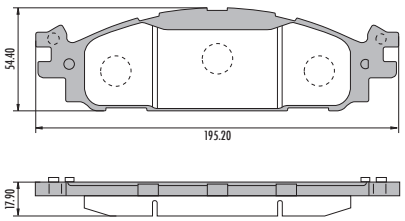

PD/1023
FMSI 8268 D1158

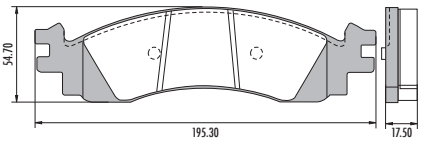

PD/1087
FMSI 8441 D1329

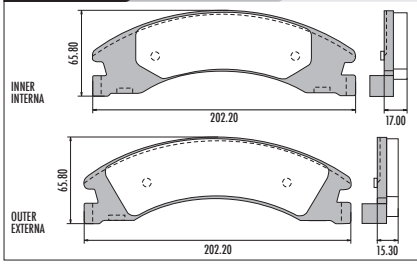

PD/166
WVA 29043

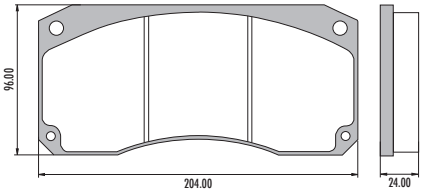

PD/168-A
WVA 29077 / 29092
Wabco System
Sistema Wabco

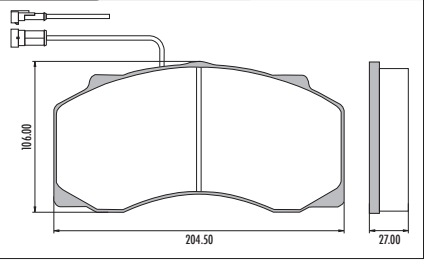

PD/161
WVA 29142 / 29119
FMSI 8726 D1517
Wabco System
Sistema Wabco

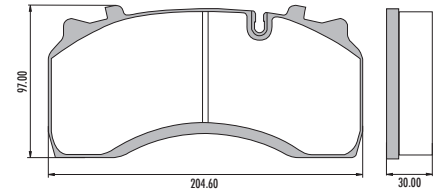

PD/194
WVA 29141
Wabco System
Sistema Wabco

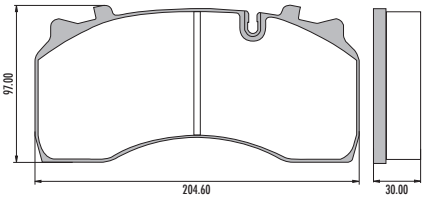

PD/133
FMSI 7815 D380
Bendix System
Sistema Bendix

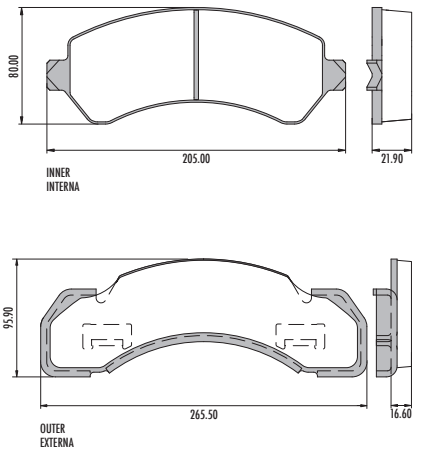

PD/557
FMSI 7108 D184

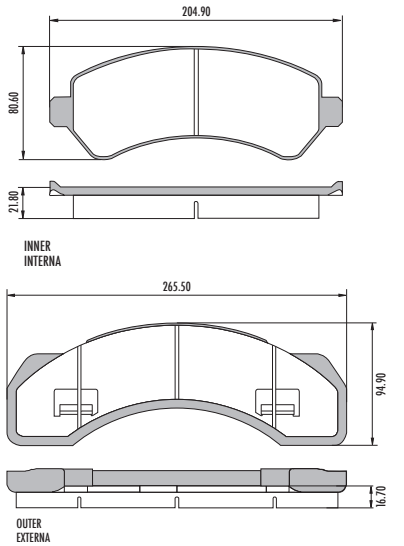

PD/1478

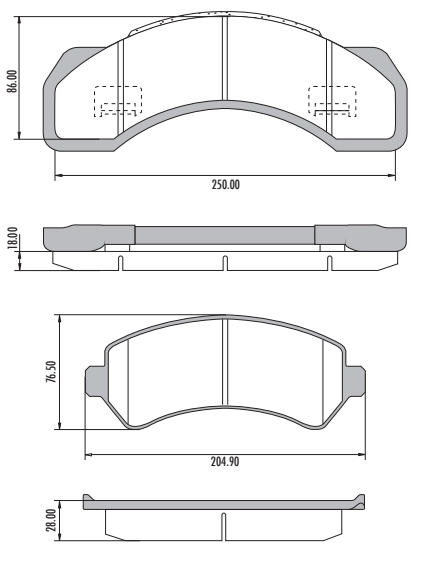

PD/127
FMSI 7818 D225
Bendix System
Sistema Bendix

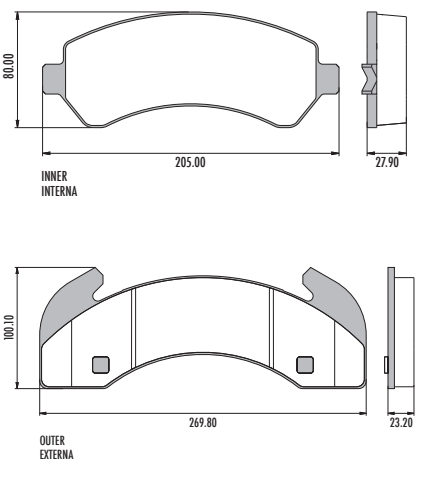

PD/138
WVA 29124 / 29155
FMSI 8733 D1525
Meritor System
Sistema Meritor

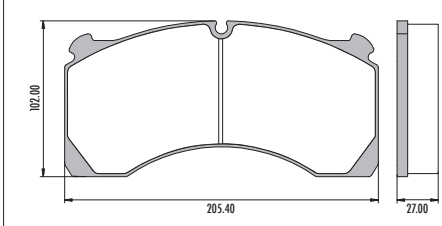

PD/624
FMSI 7697 D825

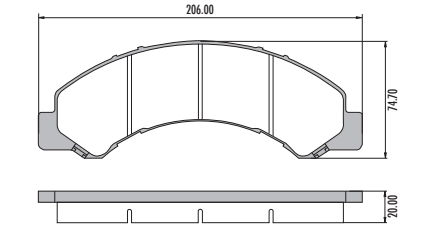

PD/625
FMSI 7698 D826

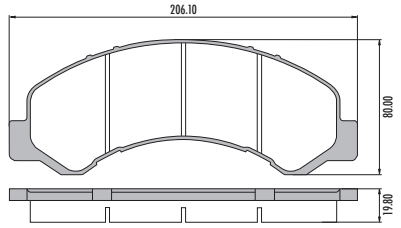

PD/206
WVA 29244 / 29245/ 29298/ 29299

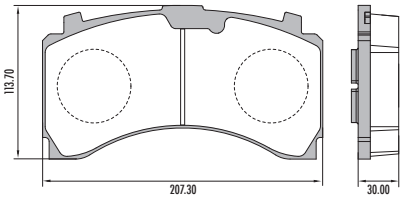

PD/1463
WVA 24685
FMSI 8642 D1452
Brembo System
Sistema Brembo

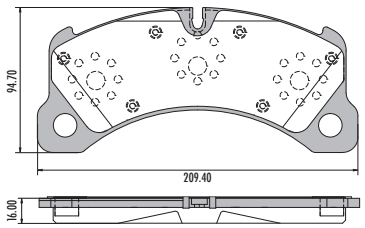

PD/160
WVA 29137/29160
Meritor System
Sistema Meritor

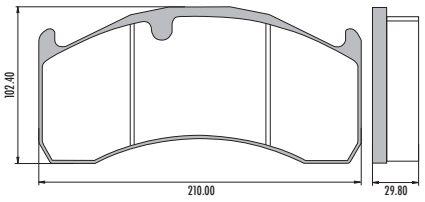

PD/209
WVA 29181 / 29207
Haldex DB19 System
Sistema Haldex DB19

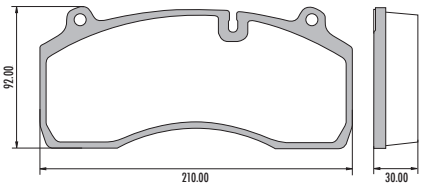

PD/626
FMSI 7699 D827

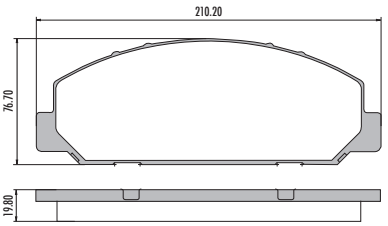

PD/750
FMSI 7837 D934

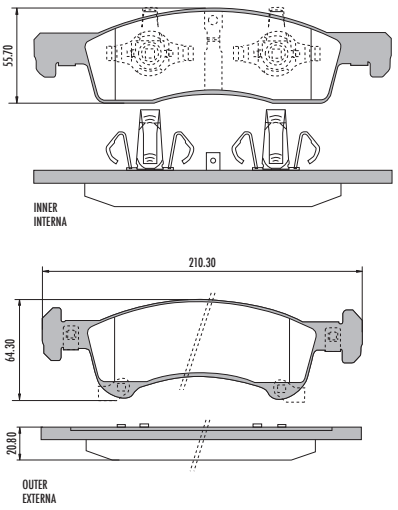

PD/164
WVA 29162
Wabco System
Sistema Wabco

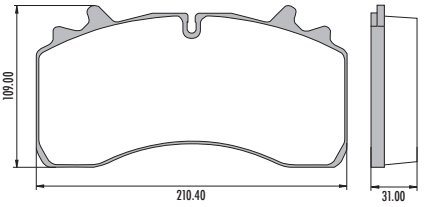

PD/131
WVA 29126 / 29159
FMSI 8556 D1438
Wabco Perrot System
Sistema Wabco Perrot

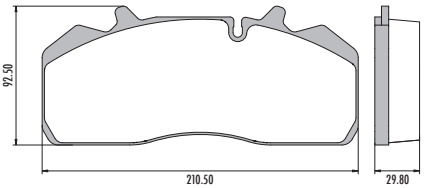

PD/142
WVA 29165
Knorr System
Sistema Knorr

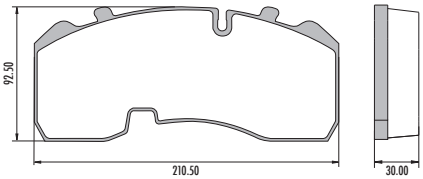

PD/213

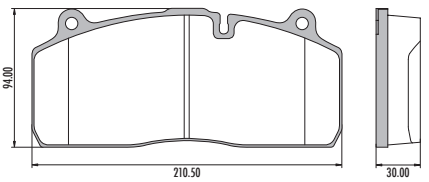

PD/130
WVA 2969/ 29177
Meritor System
Sistema Meritor

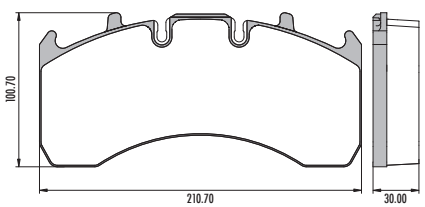

PD/120
WVA 29093 / 29094 / 29095/ 29096/ 29197/ 29145/ 29184
Knorr System
Sistema Knorr

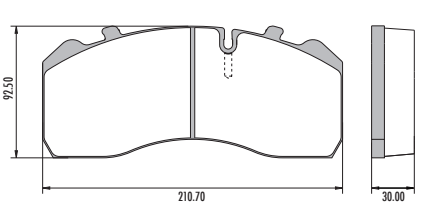

PD/147
WVA 29171
Knorr System
Sistema Knorr

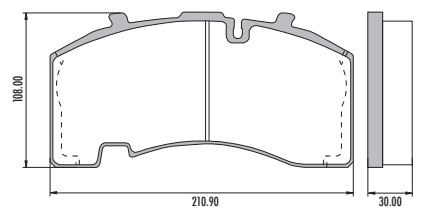

PD/172
WVA 29158
FMSI 8479 D1369
Knorr System
Sistema Knorr

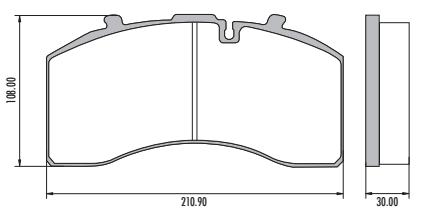

PD/126
FMSI 7141 D224
Dayton System
Sistema Dayton

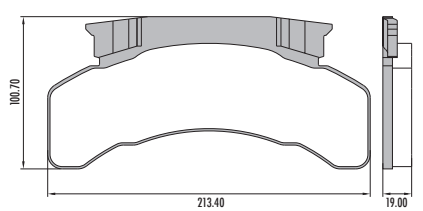

PD/1086
FMSI 8440 D1328

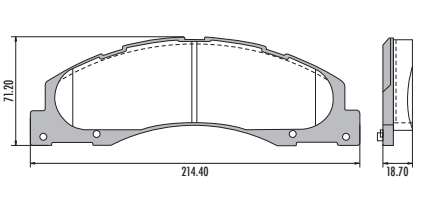

PD/571
FMSI 7652 D784

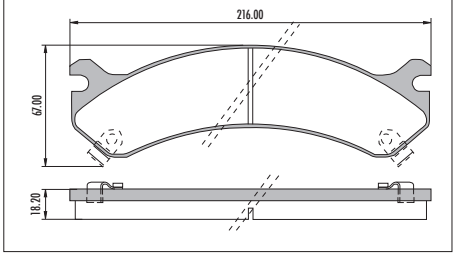

PD/746
FMSI 7788 D909

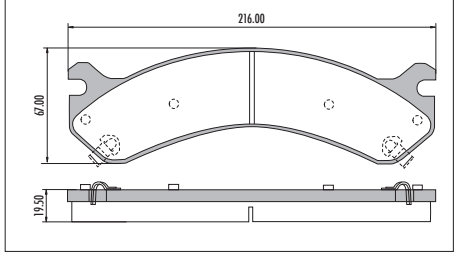

PD/202
WVA 29151
Meritor System
Sistema Meritor

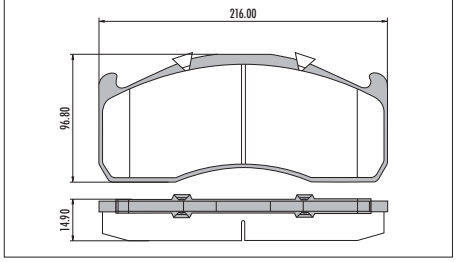

PD/195
WVA 29173 / 29203
Meritor System
Sistema Meritor

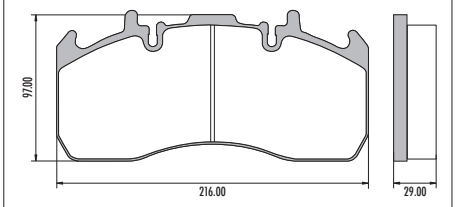

PD/214

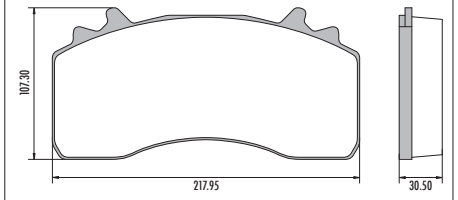

PD/639
FMSI 7891 D989

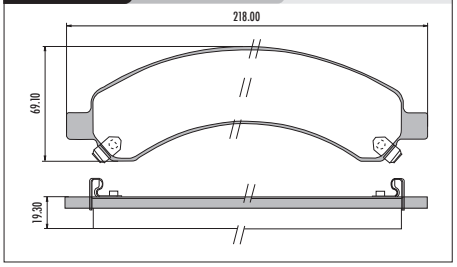

PD/654
FMSI 7299 D411

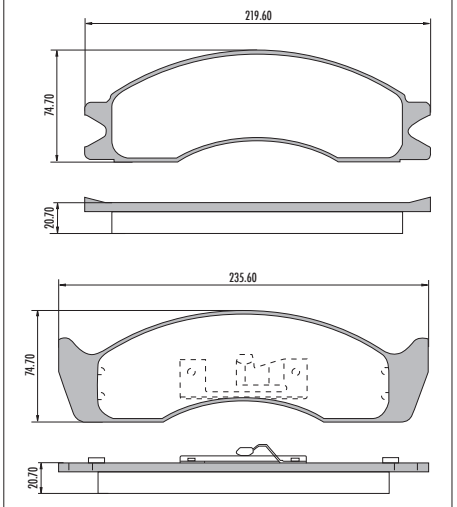

PD/637
FMSI 7864 D965

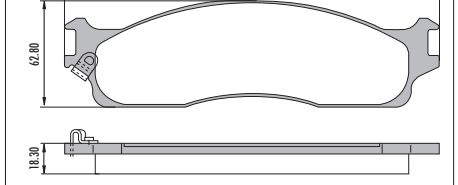

PD/627
FMSI 7694 D859

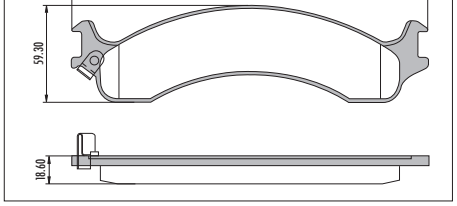

PD/576
FMSI 7694 D821

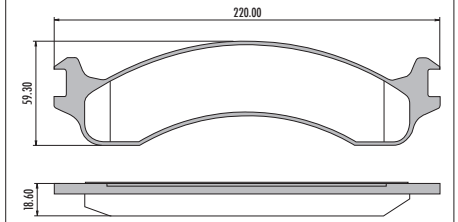

PD/777
FMSI 7677 D655

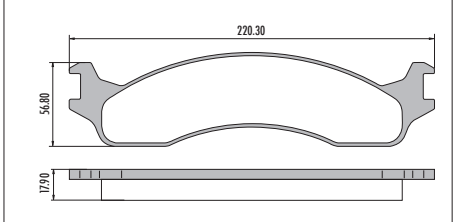

PD/559
FMSI 7535 D655

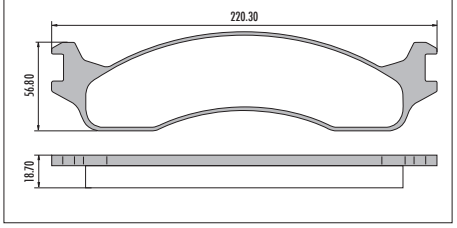

PD/587
WVA 29218
FMSI 780 D37

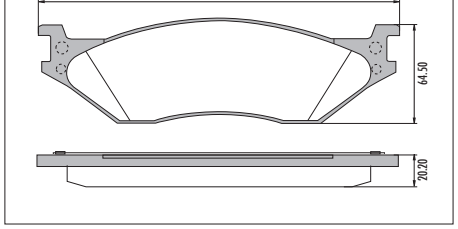

PD/640
FMSI 7972 D1066

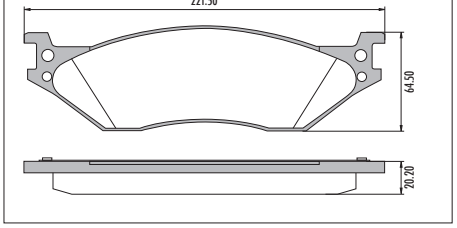

PD/570
FMSI 7644 D777

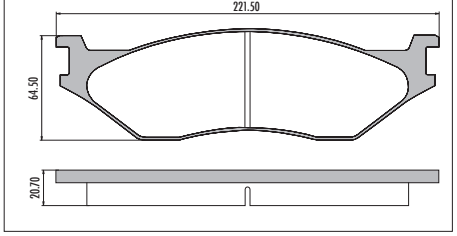

PD/653
FMSI 7149 D236

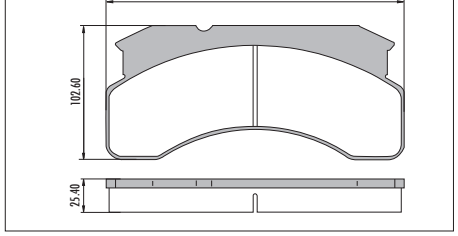

PD/1083
FMSI 8394 D1278

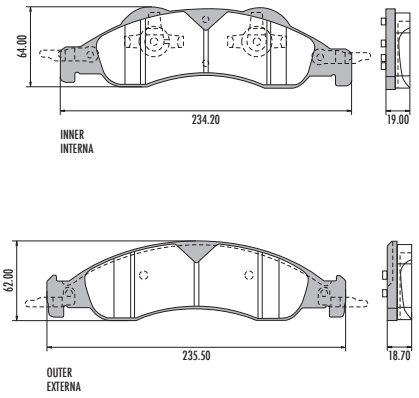

PD/524
FMSI 7436 D557

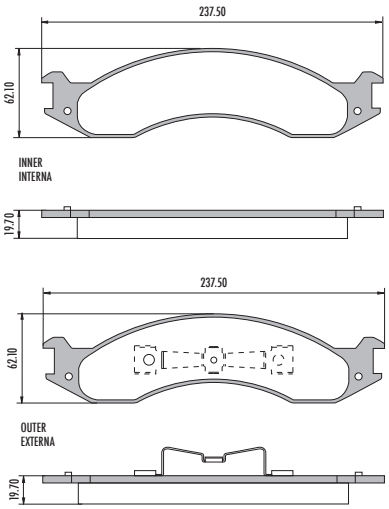

PD/179

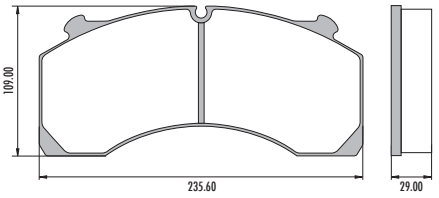

PD/143
FMSI 7636 D769
Meritor System
Sistema Meritor

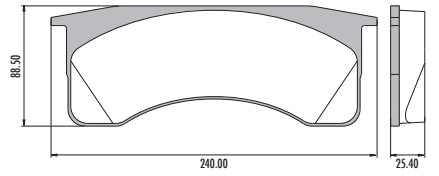

PD/144
FMSI 7636 D1032
Meritor System
Sistema Meritor

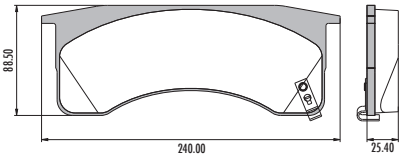

PD/128
WVA 29011
Bendix System
Sistema Bendix

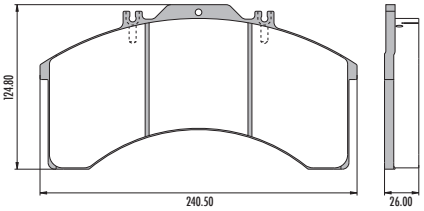

PD/205
WVA 29246 / 29247/ 29300/ 29301
Knorr System
Sistema Knorr

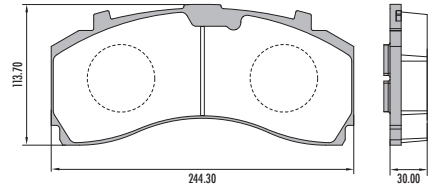

PD/145
FMSI 7654 D786

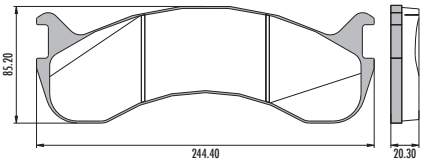

PD/146
FMSI 7655 D786

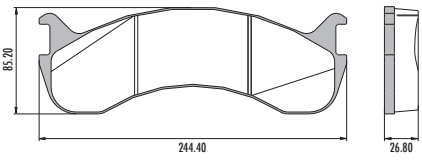

PD/197
WVA 29154
Wabco System
Sistema Wabco

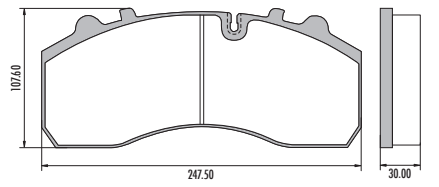

PD/116
WVA 29042 / 29059 / 29061/ 29087 / 29105 / 29108
FMSI 8323 D1203
Knorr System
Sistema Knorr

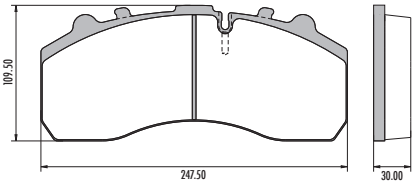

PD/141
WVA 29167
Knorr System
Sistema Knorr

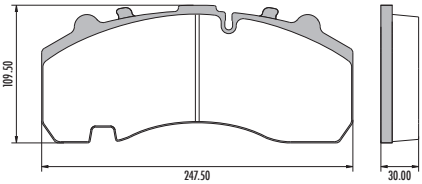

PD/170
WVA 29143 / 29185
FMSI 8735 D1527
Haldex System
Sistema Haldex

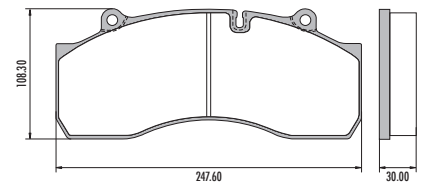

PD/186

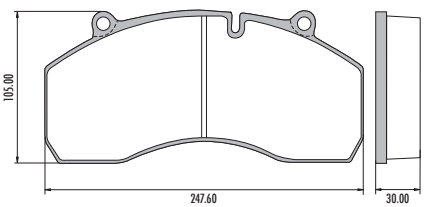

PD/207
WVA 29150

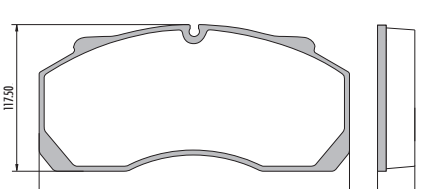

PD/112
WVA 29090
FMSI 8427 D1312
Meritor System
Sistema Meritor

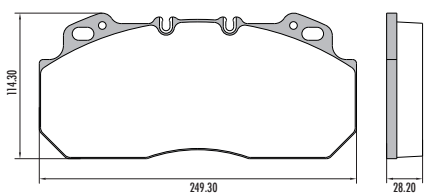

PD/529

WVA 29022 / 29125 / 29222 / 29224 / 29277
FMSI 8771 D1560
Meritor System
Sistema Meritor

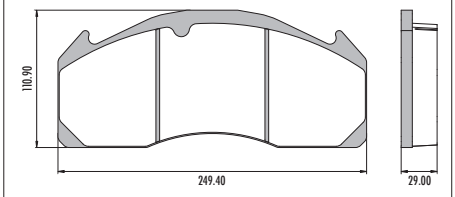

PD/196

WVA 29174 / 29219 / 29204 / 29218 / 29226
FMSI 8931 D1708
Meritor System
Sistema Meritor

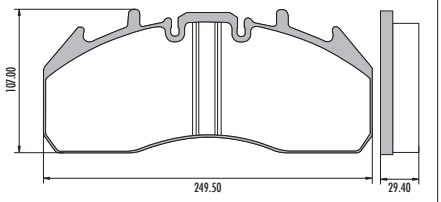

PD/125

WVA 29030 / 29083 / 29113
FMSI 8515 D1407
Meritor System
Sistema Meritor

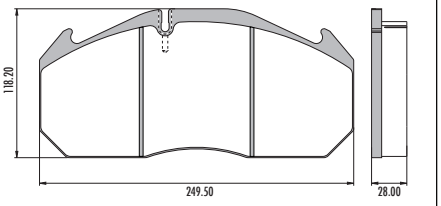

PD/125 com 30.0

WVA 29053 / 29084 / / 29114
Meritor System
Sistema Meritor

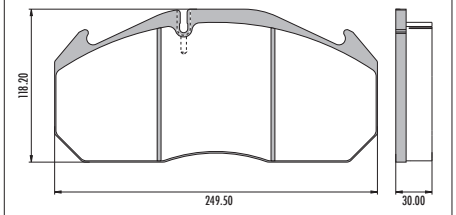

PD/129

WVA 29131 / 29156
FMSI 8425 D1310
Meritor System
Sistema Meritor

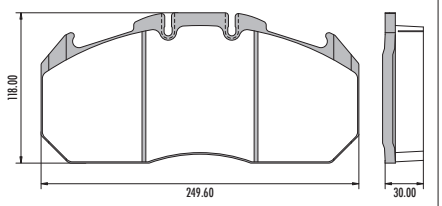

PD/187

WVA 29187
FMSI 8426 D1311
ROR System
Sistema ROR

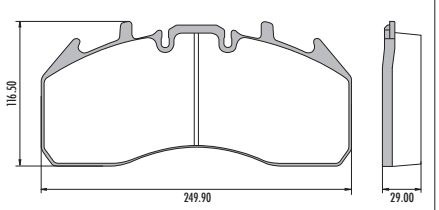

PD/204

WVA 29254
CNHTC System
Sistema CNHTC

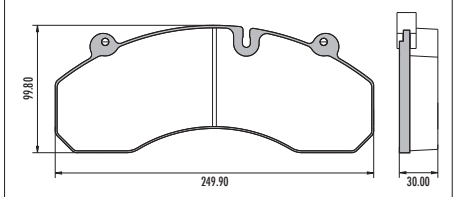

PD/373

BF-Goodrich System
Sistema BF-Goodrich

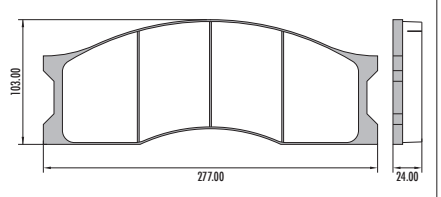

PD/29

WVA 29009
Teves System
Sistema Teves

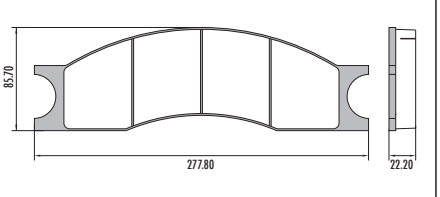

PD/178

FMSI 7969 D1064

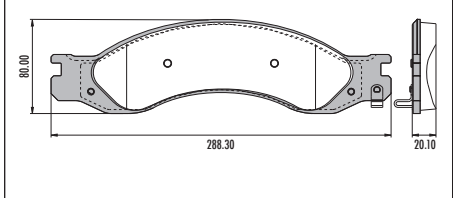

PD/177

FMSI 7914 D1010

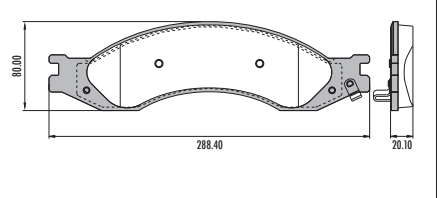

PD/372

Teves System
Sistema Teves

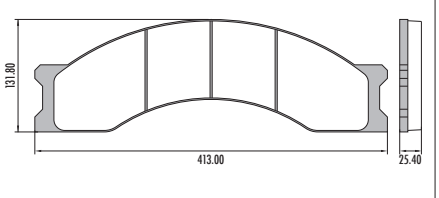

PD/370

BF-Goodrich System
Sistema BF-Goodrich

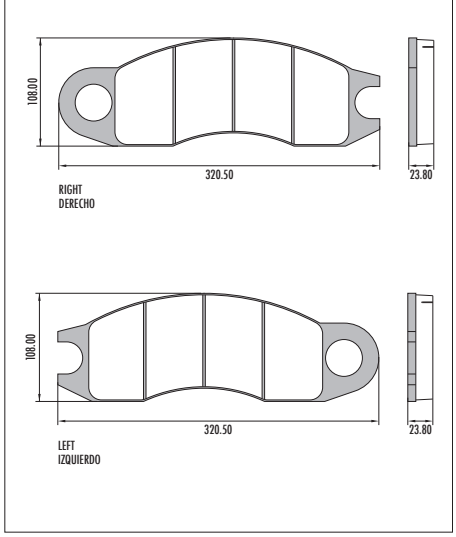

PD/371

BF-Goodrich System
Sistema BF-Goodrich

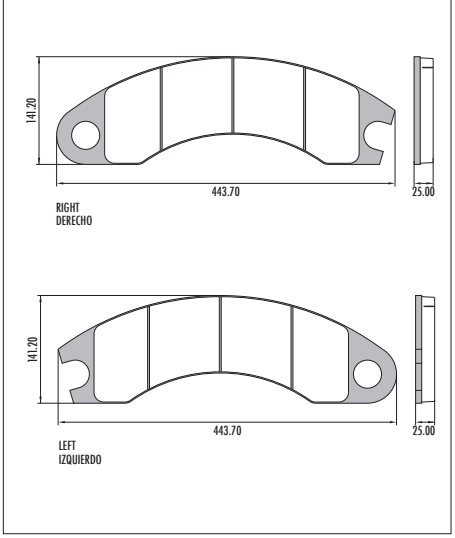

WVA	FMSI	CODE FMSI	FRAS-LE
20007	721 D9	D9	PD/313
20008	7257 D366	D366	PD/344
20009	755 D21 735 D30	D21 D30	PD/5
20011	7021 D45	D45	PD/1
20027	724 D4	D4	PD/9
20030	719 D2	D2	PD/7
20031	7186 D332	D332	PD/1131
20034	7255 D31	D31	PD/6
20073	798 D54	D54	PD/308
20074	7001 D71	D71	PD/319
20104	8657 D1457	D1457	PD/1379
20145	7010 D77	D77	PD/311-A
20162			PD/490
20166			PD/31
20168	7570 D696A	D696A	PD/329
20168	7571 D684A	D684A	PD/336
20168	7570 D696	D696	PD/337
20172			PD/317
20215	7214A D52	D52	PD/774
20218	780 D37	D37	PD/587
20228	7032 D96	D96	PD/16
20228	7031 D96	D96	PD/17
20271	7086 D157	D157	PD/468-A
20323	7043 D109	D109	PD/307
20332			PD/400-A
20347	793 D49	D49	PD/301
20375			PD/18
20386	7273 D384	D384	PD/13
20410	7371 D491	D491	PD/399
20449	7155 D275	D275	PD/544
20455	7073 D455	D455	PD/361-A
20578			PD/8
20578			PD/306
20632	7116 D193	D193	PD/312-A
20660			PD/32
20668	7144 D228	D228	PD/49
20671			PD/304
20676	7434A D555	D555A	PD/384-A
20741			PD/325-A
20753	7529 D649	D649	PD/24
20753	8251 D1140	D1140	PD/65
20753			PD/390
20772			PD/305
20778	7177 D227	D227	PD/466
20778	7143 D227	D227	PD/467
20780			PD/330
20783			PD/24-A
20833			PD/335-A
20887	7209 D569	D569	PD/328
20887	7183 D280	D280	PD/495
20905	7261 D371	D371	PD/322-A
20906			PD/522-E
20907	7201 D298	D298	PD/39
20937	7194 D292	D292	PD/305-A
20939			PD/431
20941	7311 D423	D423	PD/1159
20958	7155 D233 7251 D233	D233	PD/75
20961	7335 D340	D340	PD/59

WVA	FMSI	CODE FMSI	FRAS-LE
20961	7234 D340	D340	PD/362
21006			PD/150-A
21012	7293 D404	D404	PD/549
21016	7244 D351	D351	PD/321-A
21043	7180 D277	D277	PD/401
21050	7582 D709 7614 D709	D709	PD/38
21059	7267 D378	D378	PD/424
21080			PD/363-A
21096	7394 D516	D516	PD/327
21103			PD/430
21119	7282 D266 7282 D441	D266 D441	PD/428
21131			PD/310
21140	7314 D426	D426	PD/41
21142	7540 D660	D660	PD/441
21144	7144 D228	D228	PD/334
21147	7469 D590	D590	PD/483-A
21158	7205 D303	D303	PD/429
21193	7242 D350	D350	PD/23
21193	7242 D350	D350	PD/25
21193			PD/47-A
21195			PD/25-A
21202	8316 D1196	D1196	PD/55
21237	7398 D518	D518	PD/464-B
21245	7294 D405	D405	PD/463-B
21278			PD/425-A
21292	7437 D558	D558	PD/385
21331	7178 D273	D273	PD/386
21333	7331 D451	D451	PD/379
21338	7336 D456	D456	PD/455
21363	7412 D530	D530	PD/383
21368			PD/40
21372	7247 D356	D356	PD/426
21373	7241 D349	D349	PD/377
21383			PD/484-A
21388	8255 D1145	D1145	PD/391-A
21394	7528 D648 7528 D745	D648 D745	PD/352
21395	7672 D801	D801	PD/352-A
21404			PD/338
21430			PD/364-A
21436	8831 D1619	D1619	PD/1417
21439	7523 D645	D645	PD/489
21460			PD/521-E
21463	8256 D1146	D1146	PD/338-A
21470			PD/350
21471	7517 D639	D639	PD/1471
21479	7516 D638	D638	PD/406
21495	7350 D470	D470	PD/423
21497	7345 D465	D465	PD/397
21497	7573 D465A	D465A	PD/563
21500	7305 D418	D418	PD/378
21507			PD/454-E
21515			PD/394
21519	7551 D671	D671	PD/474
21520			PD/409
21527	7342 D462	D462	PD/453
21537	7320 D433	D433	PD/607
21539	7353 D473	D473	PD/132
21545	8305 D1187	D1187	PD/596

WVA	FMSI	CODE FMSI	FRAS-LE
21553	7344 D464	D464	PD/666
21561	7318 D430	D430	PD/550
21576	7849 D950A	D950A	PD/417-A
21592	7909 D1006	D1006	PD/341
21601	7441 D695 7441 D562	D695 D562	PD/387
21607	7286 D396	D396	PD/488
21621	7850 D951	D951	PD/659-A
21636			PD/66-A
21647	7365 D484	D484	PD/469
21650	7417 D535	D535	PD/452
21651	7382 D503	D503	PD/449
21654	7219 D466	D466	PD/376
21657	7389 D510	D510	PD/532
21674	8342 D1221	D1221	PD/405-E
21694	7497 D621	D621	PD/493
21697			PD/404
21703	7351 D471	D471	PD/778
21713	7421 D540	D540	PD/691
21721	7418 D537	D537	PD/554
21724			PD/414-E
21725	7329 D700	D700	PD/706
21730	7450 D570	D570	PD/447
21738	7443 D564	D564	PD/398
21755	7515 D637	D637	PD/610
21773	7376 D497 7293 D440	D497 D440	PD/382
21797			PD/358
21798			PD/358-A
21799			PD/422
21800			PD/422-A
21813	7403A D521 7406 D524	D521 D524	PD/504
21818	7164A D259	D259	PD/568
21822	7358 D712	D712	PD/418
21829	7605 D736	D736	PD/61
21830	7125A D387	D387	PD/374
21832	7568 D693	D693	PD/36
21840	7447 D567	D567	PD/450
21845	7585 D579	D579	PD/445
21861	7713 D838	D838	PD/1054
21862			PD/52
21866	7569 D694 8702 D694	D694	PD/367
21866	7569 D694 8702 D694	D694	PD/368
21879	7448 D568	D568	PD/388
21882	7580 D706	D706	PD/407
21897	7401 D520	D520	PD/458-B
21898	7753 D876	D876	PD/1013
21900	7608 D739	D739	PD/1046
21907	7435 D556	D556	PD/419
21911	7434 D555	D555	PD/384
21919	7647 D779	D779	PD/1050
21923	7712 D837	D837	PD/1053
21927			PD/403-B
21930			PD/433-B
21938	7715 D840	D840	PD/525-A
21945	7578 D704	D704	PD/413
21945			PD/443
21947	7487 D606	D606	PD/695
21962			PD/28

WVA	FMSI	CODE FMSI	FRAS-LE
21962			PD/47
21964			PD/482
21974	7635 D768	D768	PD/73
23021	7829 D928	D928	PD/118
23021	7829 D928	D928	PD/118-A
23022	8371 D1253	D1253	PD/479
23032	7587 D716	D716	PD/612
23044	7470A D591	D591	PD/396
23052			PD/477
23057	8252 D1141	D1141	PD/72
23061			PD/421
23063			PD/57
23070			PD/67-A
23073	7664 D794	D794	PD/786
23078	7724 D848	D848	PD/1010
23099	8699 D1500	D1500	PD/1387
23120			PD/44
23124	8309 D1190	D1190	PD/411-E
23144	7747 D872	D872	PD/1011
23154	7690 D816	D816	PD/442
23177			PD/439
23190	7750 D875	D875	PD/1012-B
23193	7628 D760	D760	PD/1007-A
23205			PD/412
23226	8290 D1176	D1176	PD/46
23229			PD/68
23234	7667 D797	D797	PD/475
23241	8433 D1321	D1321	PD/598
23258			PD/604
23271	7723 D847	D847	PD/1009
23273			PD/650-E
23277			PD/649-E
23279	7789 D910	D910	PD/586
23280	7725 D912	D912	PD/1055-A
23284	8742 D1533	D1533	PD/1395
23294	7611 D741	D741	PD/712
23300			PD/35
23302			PD/472
23305			PD/651
23314	7559 D680	D680	PD/432
23318	7530A D650	D650	PD/135
23332			PD/507
23339	7661 D791	D791	PD/573
23346			PD/411
23353	7763 D886	D886	PD/480
23358	7574 D699	D699	PD/564
23392	7710 D687	D687	PD/340-B
23400	7557 D677	D677	PD/611
23409			PD/514
23417			PD/600
23420	7566 D691 7566 D855	D691 D855	PD/561
23423	7676 D805	D805	PD/1008
23434			PD/342
23442	7641 D774	D774	PD/486
23463	8257 D1147	D1147	PD/595
23471			PD/416
23472	7532 D652	D652	PD/332
23482	7957 D973	D973	PD/796
23484			PD/64

WVA	FMSI	CODE FMSI	FRAS-LE
23487			PD/74
23513	7581 D707	D707	PD/707
23518			PD/343
23532	7716 D841	D841	PD/531
23539	7640 D773	D773	PD/819
23543	7688 D813	D813	PD/725
23557	7790 D911	D911	PD/599
23569	7739 D864	D864	PD/630
23572	7637 D770	D770	PD/619
23581	8555 D1437	D1437	PD/520
23582	7743 D868	D868	PD/632
23584	7741 D866	D866	PD/631
23585	7738 D862	D862	PD/628
23593	7602 D733	D733	PD/616
23597	8254 D1143	D1143	PD/435
23599	8333 D1213 8779 D1570	D1213 D1570	PD/505
23600	8749 D1541	D1541	PD/346
23600			PD/353
23601		D1492	PD/1331
23601	8742 D1617	D1617	PD/1416
23602			PD/369-B
23603			PD/438-B
23613			PD/347
23619	8865 D1638	D1638	PD/1425
23627	7545A D667	D667	PD/410
23635	7674 D803	D803	PD/575
23637	7479 D601	D601	PD/389
23638	7732 D856 7988 D856	D856 D856	PD/580
23649			PD/69
23656	7955 D1051	D1051	PD/629
23662			PD/1330
23663	7593 D726	D726	PD/110
23669	8325 D1205	D1205	PD/516
23714			PD/518
23740	7511A D633	D633	PD/395
23766	8335 D1215	D1215	PD/491
23780	7590 D722	D722	PD/614
23784			PD/331
23787	7719 D843	D843	PD/530
23816	8336 D1216	D1216	PD/512
23836	7824 D923	D923	PD/748
23842			PD/494
23855	7785 D906	D906	PD/743
23879	8334 D1214	D1214	PD/500
23881	8466 D1357	D1357	PD/1344
23882	7921 D1018	D1018	PD/592-B
23914	8213 D1108	D1108	PD/1030
23917	8318 D1198	D1198	PD/498-A
23920			PD/1442
23921	8794 D1582	D1582	PD/501
23928	7787 D908	D908	PD/745
23930			PD/601
23945	8227 D1121	D1121	PD/1022
23951	7744 D869	D869	PD/134
23961	8421 D1130	D1130	PD/1450
23961	8825 D1719	D1719	PD/135
23974	8385 D1269	D1269	PD/818
23984	8324 D1204	D1204	PD/1288
23993	8379 D1261	D1261	PD/668

WVA	FMSI	CODE FMSI	FRAS-LE
24007			PD/1094-A
24008	8828 D1615	D1615	PD/1095-A
24056	7870 D969	D969	PD/638
24066	7742 D867	D867	PD/538
24071	7939 D1036	D1036	PD/681
24077			PD/1476
24083	7846 D945	D945	PD/755
24150	8833 D1621	D1621	PD/1335
24162	8489 D1651	D1651	PD/1431
24260	7976 D1071	D1071	PD/768
24275	8815 D1601	D1601	PD/633
24277	8253 D1142	D1142	PD/535
24291	7782 D904	D904	PD/742
24336	8330 D1210	D1210	PD/740
24337	8331 D1211	D1211	PD/744
24338	8332 D1212	D1212	PD/753
24342	7994 D1089	D1089	PD/809
24346	8307 D1188	D1188	PD/1077
24349	8746 D1537	D1537	PD/1396
24466	8748 D1540	D1540	PD/1397-B
24483	8213 D1348	D1348	PD/1456
24484			PD/1028-A
24484	8767 D1555	D1555	PD/1028-B
24485	8726 D1528	D1528	PD/1091-A
24486	8701 D1502	D1502	PD/1029-A
24496	8422 D1307	D1307	PD/1453
24501	8614 D1295	D1295	PD/1296
24540			PD/1338
24544	8377 D1258	D1258	PD/1080
24545	8378 D1259	D1259	PD/1081
24563	8656 D1456	D1456	PD/1465
24659	8543 D1426	D1426	PD/1460
24660	8922 D1696	D1696	PD/1470
24685	8642 D1452	D1452	PD/1463
24708	8845 D1628	D1628	PD/1423
24820			PD/1446
24922			PD/1445
25034	8667 D1470	D1470	PD/1514
25085	8544 D1427	D1427	PD/1461
25246	8731 D1523	D1523	PD/1394
25321	8888 D1661	D1661	PD/1479
25434	8397 D1585	D1585	PD/1407
25434	8397 D1281	D1281	PD/1498
25562	7974 D1631	D1631	PD/1424
25564	8836 D1623	D1623	PD/1419
29001			PD/420-A
29009			PD/29
29011			PD/128
29012			PD/360-A
29013			PD/155-E
29017			PD/148
29024			PD/148-A
29029			PD/193-A
29032			PD/156
29039			PD/140-A
29040			PD/191-A
29041			PD/359-A
29043			PD/166
29055			PD/152
29065			PD/355

WVA	FMSI	CODE FMSI	FRAS-LE
29067			PD/123
29071			PD/108
29076	7848 D949A	D949A	PD/111-A
29077			PD/168-A
29088			PD/124
29090	8427 D1312	D1312	PD/112
29097			PD/169-E
29107			PD/339-A
29117	8727 D1518	D1518	PD/117
29120	8577 D1441	D1441	PD/186
29121	8835 D1487	D1487	PD/122
29122			PD/139
29123			PD/163
29126			PD/131
29136			PD/159
29137			PD/160
29138			PD/192-A
29140			PD/151-A
29141			PD/194
29142	8726 D1517	D1517	PD/161
29143	8735 D1527	D1527	PD/170
29150			PD/207
29151			PD/202
29153	7848 D949	D949	PD/111
29154			PD/197
29158	8479 D1369	D1369	PD/172
29160	8834 D1622	D1622	PD/1418-A
29162			PD/164
29165			PD/142
29167			PD/141
29171			PD/147
29187	8426 D1311	D1311	PD/187
29188	8435 D1312	D1323	PD/149
29189	8480 D1370	D1370	PD/173
29190	8431 D1317	D1317	PD/663
29192	8430 D1316	D1316	PD/662
29200	8383 D1268	D1268	PD/661
29217	8432 D1318	D1318	PD/664
29229			PD/189
29231			PD/201
29232			PD/190
29237			PD/208
29254			PD/204
29279			PD/214
29302	7816 D442	D442	PD/154
29747			PD/175
29835	7968 D1062	D1062	PD/104
29969			PD/176
20002 / 20191 / 20192			PD/333
20261 / 20267			PD/1443-A
20547 / 21353	7563 D688	D688	PD/42
20669 / 21366	7571 D684	D684	PD/602
20775 / 20776 / 20777			PD/309
20870 15,0	7153 D242	D242	PD/680
20907 / 20908	7201 D298	D298	PD/48
20926 / 20928			PD/318-A
20973 / 20974	8658 D1482	D1482	PD/465
21190 / 21192 / 21201	7666 D796	D796	PD/37
21209 / 21210	7334 D454	D454	PD/326-A
21312 / 21313 / 21314	7233 D374	D374	PD/457

WVA	FMSI	CODE FMSI	FRAS-LE
21344 / 21345 / 21346	7332 D452	D452	PD/380
21347 / 21348 / 21349	7228 D333	D333	PD/427
21410 / 21481			PD/446
21467 / 21543 / 21544	7253 D363 7347 D363	D363 D363	PD/357
21479 / 23445	7729 D852	D852	PD/406-B
21484 / 21485	7561 D682	D682	PD/1472
21486 / 21642	7560 D681	D681	PD/1042-A
21572 / 21904			PD/657-A
21576 / 21577	7849 D950	D950	PD/417
21586 / 21587	7541 D661	D661	PD/402-A
21605 / 21606			PD/451
21634 / 21635	7461 D581	D581	PD/487
21664 / 21665	7583 D710	D710	PD/1043
21679 / 21785 / 21789 / 21790	7298 D436	D436	PD/115
21775 / 21776	7671 D799	D799	PD/527
21815 / 21817	7404A D522	D522	PD/553
21974 / 23130	7860 D768	D768	PD/58
21978 / 21979 / 21980 / 21981	8254 D1499	D1499	PD/1096
22165 / 22166 / 22167	946 D1811	D1811	PD/1512
23004 / 23005			PD/393
23035 / 23036			PD/481-A
23040 / 23041 / 23042			PD/448-A
23081 / 23082 / 23083	8247 D1137	D1137	PD/473
23178 / 23179	7702 D829	D829	PD/1052
23187 / 23131	7709 D768	D768	PD/58-B
23200 / 23201	8860 D1460	D1460	PD/1378
23202 / 23203	8289 D1175	D1175	PD/497
23215 / 24325	8750 D1542	D1542	PD/1398
23218 / 23220			PD/60-A
23230 / 23231 / 23232 / 23233			PD/471-A
23238 / 23239 / 23240	8258 D1148	D1148	PD/478
23242 / 23243 / 23244			PD/470
23245 / 23247 / 23248			PD/1444
23258 / 23259 / 23262 / 23263	8661 D1461	D1461	PD/1380
23309 / 23310 / 24495	7820 D919	D919	PD/1473
23313 / 24255			PD/1370
23340 / 23341 / 23342	8674 D1475	D1475	PD/1385
23348 / 23349 / 23350	7704 D831	D831	PD/496
23406 / 23407	8340 D1219	D1219	PD/648
23510 / 23511 / 23512	7695 D822	D822	PD/789
23558 / 21915	7589 D721	D721	PD/613
23587 / 23588 / 23589	8212 D1107	D1107	PD/1000-B
23623 / 23624	8345 D1226	D1226	PD/1451
23631 / 23336	7660 D790	D790	PD/620
23640 / 23642	7733 D857	D857	PD/581
23705 / 23706	8829 D1616	D1616	PD/509-A
23705 / 23706 / 23707	8829 D1616	D1616	PD/509-B
23708 / 23709 / 23710			PD/511-B
23711 / 23712	8745 D1536	D1536	PD/673-B
23720 / 24213 / 24214			PD/1447
23723 / 23724	7947 D1044	D1044	PD/767
23732 / 23737			PD/1448
23801 / 23912 / 23913	8220 D915	D915	PD/1232-B
23814 / 23871 / 23872	7784 D905	D905	PD/585
23868 / 23869	7795 D914	D914	PD/644
23885 / 23896 / 23897	7928 D1024 7928 D1117	D1024 D1117	PD1449-A

WVA	FMSI	CODE FMSI	FRAS-LE
23891 / 23892 / 23893	7825 D924	D924	PD/635
23901 / 23902	7909 D1006A	D1006A	PD/341-A
23919 / 23919			PD/652-B
23962 / 23963 / 25181			PD/1373
23966 / 23987 / 23988	8505 D1397	D1397	PD/1092
23973 / 24403	8691 D1491	D1491	PD/1386
24014 / 24015	7940 D1037	D1037	PD/723
24024 / 24025 / 24026	7877 D976	D976	PD/528
24036 / 24037 / 24038	7734 D858	D858	PD/582
24062 / 24063 / 24064 / 23234	7779 D1035	D1035	PD/817
24068 / 24069 / 24070 / 23725 / 23726 / 23727 / 23728	7917 D1013	D1013	PD/667
24092 / 24178 / 24179			PD/634
24123 / 24124	8421 D1306	D1306	PD/1301
24133 / 24174	8362 D1245	D1245	PD/1345-E
24134 / 24175			PD/1477-E
24134 / 24175			PD/1477
24147 / 25165			PD/1339-B
24170 / 24171	8411 D1294	D1294	PD/1452
24172 / 24173	8490 D1381	D1381	PD/1458
24231 / 24232 / 24233	7418 D1086	D1086	PD/645
24283 / 24285 / 24285	8653 D1454	D1454	PD/1097
24310 / 24456	8453 D1342	D1342	PD/1342
24317 / 24318 / 24319	8266 D1156	D1156	PD/1279
24320 / 24321 / 24322	8267 D1157	D1157	PD/1093
24332 / 24333 / 24334	8486 D1375	D1375	PD/1457-B
24342 / 25351	7994 D1521	D1521	PD/1393
24351 / 24352 / 24568 / 24569 /	8322 D1202	D1202	PD/1287
24353 / 24354	8784 D1574	D1574	PD/1027
24370 / 24594	7943 D1039	D1039	PD/801
24375 / 24376	8306 D1125	D1125	PD/1277
24399 / 24875	8525 D1412	D1412	PD/1459
24409 / 24743	8434 D1322	D1322	PD/1454
24452 / 24721	8643 D1453	D1453	PD/1464
24468 / 24469	8689 D1489	D1489	PD/1099-B
24488 / 24489 / 24490	8414 D1297	D1297	PD/1341
24498 / 24499 / 24500	8391 D1275	D1275	PD/715
24510 / 24511 / 24512	8381 D1264	D1264	PD/711
24529 / 24530	8728 D1519	D1519	PD/771
24538 / 24914	8844 D1627	D1627	PD/1422
24557 / 24558	8212 D1107	D1107	PD/1000
24561 / 24562	8672 D1473	D1473	PD/1466
24597 / 24598 / 24609	8775 D1566	D1566	PD/1359
24604 / 24605	8439 D1327	D1327	PD/1026
24606 / 25214	8785 D1547	D1547	PD/1369
24610 / 24611 / 24612	8463 D1354	D1354	PD/1320
24709 / 24710			PD/1376
24724 / 24725 / 24726	8804 D1592	D1592	PD/1365
24727 24728 24729			PD/1493-B
24739 / 24740	8753 D1545	D1545	PD/1399
24757 / 24758 / 24759	7558 D679	D679	PD/137
24822 / 28823 / 24824	8438 D1326	D1326	PD/300
24914 / 24538	8844 D1627	D1627	PD/1377
24915 / 24916 / 24917	8527 D1413	D1413	PD/1497
25008 / 25010	8990 D1761	D1761	PD/1491

WVA	FMSI	CODE FMSI	FRAS-LE
25034 / 25035 / 25036	8730 D1522	D1522	PD/1101
25096 / 25097 / 25098	8668 D1468	D1468	PD/1102
25112 / 25113			PD/1440-B
25149 / 25150 / 25151	8906 D1677	D1677	PD/1433
25153 / 25154 / 25155	8401 D1284	D1284	PD/1487
25158 / 25159	8758 D1549	D1549	PD/1374
25187 / 25188 / 25189	8615 D1447	D1447	PD/1462
25209 / 25210	8776 D1567	D1567	PD/1098
25268 / 25269 / 25270	8801 D1590	D1590	PD/1364
25297 / 25298 / 25299	8208 D1584	D1584	PD/1406
25337 / 25338 / 25339	8428 D1594	D1594	PD/1368
25348 / 25349 / 2535	886 D1593	D1593	PD/149
25348 / 25349 / 25350	8806 D1593	D1593	PD/1409
25376 / 25377	8811 D1596	D1596	PD/1410
25378 / 25379	8800 D1589	D1589	PD/1408
25410 / 25411 / 25412	8778 D1569	D1569	PD/1403
25449 / 25450	8824 D1611	D1611	PD/1414
25458 / 25459 / 24460	8825 D1612	D1612	PD/1415
25466 / 25467 / 25468	8392 D1608	D1608	PD/1413
25478 / 25479	8754 D1554	D1554	PD/1401
25540 / 25541	8837 D1624	D1624	PD/1420
25552 / 25553 / 25554	8840 D1625	D1625	PD/1421
25555 / 25556	8873 D1645	D1645	PD/1427
25581 / 25582	8878 D1650	D1650	PD/1430
25588 / 25589	8877 D1649	D1649	PD/1429
25591 / 25592 / 25593	8882 D1653	D1653	PD/1432
25599 / 25600 / 25601	8951 D1727	D1727	PD/1489
25610 / 25611 / 25612	8950 D1726	D1726	PD/1488
25632 / 25633 / 25634	8905 D1676	D1676	PD/1434
25683 / 25684	8989 D1760	D1760	PD/1490-B
25702 / 25703			PD/1483
25733 / 22169 / 22170	9044 D1809	D1809	PD/1496
25792 / 25793 / 25794	8883 D1654	D1654	PD/1494
25947 / 25948 / 25949			PD/1495
29022 / 29125 / 29222 / 29224 / 29277			PD/529
29030 / 29083 / 29113			PD/125
29042 / 29059 / 29060 / 29061 / 29062 / 29087 / 29105 / 29106 / 29108 / 29109 / 29163 / 29202 / 29196 / 29278	8323 D1203	D1203	PD/116
29053 / 29084 / 29114			PD/125 c/30.0
29093 / 29094 / 29095 / 29096 / 29287			PD/120
29115 / 29116			PD/526
29124 / 29155	8733 D1525	D1525	PD/138
29131 / 29156	8425 D1310	D1310	PD/129
29148 / 29115			PD/533
29169 / 29177			PD/130
29173 / 29203 / 29272			PD/195
29174 / 29219 / 29204 / 29218 / 29226			PD/196
29175 / 29195 / 29198 / 29274 / 29294			PD/213
29181 / 29207			PD/209
29229 / 29230	8793 D1581	D1581	PD/1405-A
29244 / 29245 / 29298 / 29299			PD/206
29246 / 29247 / 29300 / 29301			PD/205

FMSI	CODE FMSI	FRAS-LE	WVA
719 D2	D2	PD/7	20030
721 D9	D9	PD/313	20007
724 D4	D4	PD/9	20027
755 D21 735 D30	D21 D30	PD/5	20009
780 D37	D37	PD/587	20218
788 D50 7013A D50	D50	PD/19-C	
788 D360 7264 D375	D360 D375	PD/523	
793 D49	D49	PD/301	20347
798 D54	D54	PD/308	20073
886 D1593	D1593	PD/1409	25348 / 25349 / 2535
892 D1673	D1673	PD/1468	
893 D1674	D1674	PD/1469	
946 D1811	D1811	PD/1512	22165 / 22166 / 22167
7001 D71	D71	PD/319	20074
7010 D77	D77	PD/311-A	20145
7021 D45	D45	PD/1	20011
7031 D96	D96	PD/17	20228
7032 D96	D96	PD/16	20228
7043 D109	D109	PD/307	20323
7054 D120	D120	PD/539	
7073 D455	D455	PD/361-A	20455
7081 D149	D149	PD/541	
7086 D157	D157	PD/468-A	20271
7108 D184	D184	PD/557	
7116 D193	D193	PD/312-A	20632
7123 D201	D201	PD/303-A	
7127 D207	D207	PD/1031	
7136 D215	D215	PD/499	
7141 D224	D224	PD/126	
7143 D227	D227	PD/467	20778
7144 D228	D228	PD/334	21144
7146 D429	D429	PD/684	
7149 D236	D236	PD/653	
7153 D242	D242	PD/680	20870
7155 D275	D275	PD/544	20449
7170 D265	D265	PD/136	
7177 D227	D227	PD/466	20778
7178 D273	D273	PD/386	21331
7179 D269	D269	PD/545	
7180 D277	D277	PD/401	21043
7183 D280	D280	PD/495	20887
7186 D332	D332	PD/1131	20031
7192 D289	D289	PD/546	
7194 D292	D292	PD/305-A	20937
7201 D298	D298	PD/39	20907
7201 D298	D298	PD/48	20907 / 20908
7201 D298A	D298A	PD/68	23229
7205 D303	D303	PD/429	21158
7209 D569	D569	PD/328	20887
7219 D466	D466	PD/376	21654
7223 D325	D325	PD/682	
7224 D326	D326	PD/605	
7228 D333	D333	PD/427	21347 / 21348 / 21349
7233 D374	D374	PD/457	21312 / 21313 / 21314
7234 D340	D340	PD/362	20961
7241 D349	D349	PD/377	21373
7242 D350	D350	PD/23	21193
7242 D350	D350	PD/25	21193

FMSI	CODE FMSI	FRAS-LE	WVA
7242 D350	D350	PD/28	21962
7244 D351	D351	PD/321-A	21016
7247 D356	D356	PD/426	21372
7251 D233	D233	PD/75	20958
7253 D363 7347 D363	D363	PD/357	21543 / 21544
7255 D31	D31	PD/6	20034
7257 D366	D366	PD/344	20008
7259 D368	D368	PD/547	
7259 D369	D369	PD/502	
7260 D370	D370	PD/548	
7261 D371	D371	PD/322-A	20905
7265 D376	D376	PD/519	
7267 D378	D378	PD/424	21059
7272 D383	D383	PD/683	
7273 D384	D384	PD/13	20386
7276 D389	D389	PD/1002	
7282 D266 7282 D441	D266 D441	PD/428	21119
7286 D396	D396	PD/488	21607
7286 D1171 7286 D1267	D1171 D1267	PD/1337	
7290 D401	D401	PD/440	
7293 D404	D404	PD/549	21012
7294 D405	D405	PD/463-B	21245
7298 D436	D436	PD/115	21679 / 21785 / 21789 / 21790
7299 D411	D411	PD/654	
7300 D412	D412	PD/1032	
7305 D418	D418	PD/378	21500
7306 D419	D419	PD/1034	
7311 D423	D423	PD/1159	20941 / 21028
7314 D426	D426	PD/41	21140
7318 D430	D430	PD/550	21561
7318 D653	D653	PD/700	
7318 D815	D815	PD/727	
7320 D433	D433	PD/607	21537
7329 D700	D700	PD/706	21725
7330 D450	D450	PD/608	
7331 D451	D451	PD/379	21333
7332 D452	D452	PD/380	21344 / 21345 / 21346
7334 D454	D454	PD/326-A	21209 / 21210
7335 D340	D340	PD/59	20961
7336 D456	D456	PD/455	21338
7339 D459 (big clip)	D459 (big clip)	PD/552	
7339 D459 (small clip)	D459 (small clip)	PD/551	
7342 D462	D462	PD/453	21527
7344 D464	D464	PD/666	21553
7345 D465	D465	PD/397	21497
7350 D470	D470	PD/423	21495
7351 D471	D471	PD/778	21703
7353 D473	D473	PD/132	21539
7357 D476	D476	PD/686	
7358 D477	D477	PD/708	
7358 D712	D712	PD/418	21822
7365 D484	D484	PD/469	21647
7371 D491	D491	PD/399	20410
7376 D497 7293 D440	D497 D440	PD/382	21773
7381 D501	D501	PD/1035	
7382 D503	D503	PD/449	21651

FMSI	CODE FMSI	FRAS-LE	WVA
7384 D505	D505	PD/609	
7384 D623	D623	PD/697	
7385 D506	D506	PD/506	
7386 D507	D507	PD/687	
7387 D508	D508	PD/688	
7387 D698	D698	PD/677	
7387 D714	D714	PD/709	
7388 D509	D509	PD/1036	
7389 D510	D510	PD/532	21657
7389 D510	D510	PD/660	
7390 D511	D511	PD/1037	
7394 D516	D516	PD/327	21096
7395 D394	D394	PD/1003	
7398 D518	D518	PD/464-B	21237
7401 D520	D520	PD/458-B	21897
7410 D529	D529	PD/779	
7412 D530	D530	PD/383	21363
7412 D723	D723	PD/675	
7417 D535	D535	PD/452	21650
7418 D536	D536	PD/690	
7418 D537	D537	PD/554	21721
7418 D1086	D1086	PD/645	24231 / 24232 / 24233
7421 D540	D540	PD/691	21713
7425 D546	D546	PD/1004	
7425 D675	D675	PD/655	
7427 D683	D683	PD/1038	
7430 D551	D551	PD/781	
7434 D555	D555	PD/384	21911
7435 D556	D556	PD/419	21907
7436 D557	D557	PD/524	
7437 D558	D558	PD/385	21292
7441 D695 7441 D562	D695 D562	PD/387	21601
7443 D564	D564	PD/398	21738
7447 D567	D567	PD/450	21840
7448 D568	D568	PD/388	21879
7450 D570	D570	PD/447	21730
7456 D576	D576	PD/555	
7460 D580	D580	PD/693	
7461 D581	D581	PD/487	21634 / 21635
7468 D588	D588	PD/1039	
7469 D590	D590	PD/483-A	21147
7475 D597	D597	PD/1040	
7476 D598	D598	PD/678	
7478 D600	D600	PD/694	
7479 D601	D601	PD/389	23637
7487 D606	D606	PD/695	21947
7489 D610	D610	PD/696	
7493 D617	D617	PD/782	
7494 D618	D618	PD/783	
7495 D619	D619	PD/784	
7497 D621	D621	PD/493	21694
7503 D632	D632	PD/356	
7504 D627	D627	PD/698	
7513 D635	D635	PD/415	
7514 D636	D636	PD/1041	
7514 D663	D663	PD/558	
7515 D637	D637	PD/610	21755
7516 D638	D638	PD/406	21479
7517 D639	D639	PD/1471	21471

FMSI	CODE FMSI	FRAS-LE	WVA
7520 D643	D643	PD/785	
7523 D645	D645	PD/489	21439
7524 D627	D627	PD/699	
7527 D646	D646	PD/656	
7528 D648 7528 D745	D648 D745	PD/352	21394
7529 D649	D649	PD/24	20753
7529 D649	D649	PD/24-B	
7529 D649	D649	PD/34	
7532 D652	D652	PD/332	23472
7533 D540	D540	PD/692	
7535 D655	D655	PD/559	
7537 D659	D659	PD/702	
7540 D660	D660	PD/441	21142
7541 D661	D661	PD/402-A	21586 / 21587
7543 D664	D664	PD/560	
7546 D668	D668	PD/1005	
7549 D436	D436	PD/773	
7551 D671	D671	PD/474	21519
7553 D672	D672	PD/703	
7554 D673	D673	PD/508	
7555 D674	D674	PD/704	
7557 D677	D677	PD/611	23400
7558 D679	D679	PD/137	
7559 D680	D680	PD/432	23314
7560 D681	D681	PD/1042	21642 / 21486
7561 D682	D682	PD/1472	21484 / 21485
7563 D688	D688	PD/42	20547 / 21353
7566 D691 7566 D855	D691 D855	PD/561	23420
7568 D693	D693	PD/36	21832
7569 D694	D694	PD/367	21866
7569 D694	D694	PD/368	21866
7570 D696	D696	PD/337	20168
7570 D696A	D696A	PD/329	20168
7571 D684	D684	PD/602	20669 / 21366
7571 D684A	D684A	PD/336	20168
7573 D465	D465	PD/563	21497
7574 D699	D699	PD/564	23358
7575 D701	D701	PD/1006	
7576 D702	D702	PD/565	
7578 D704	D704	PD/413	21945
7580 D706	D706	PD/407	21882
7581 D707	D707	PD/707	23513
7582 D709 7614 D709	D709	PD/38	21050
7583 D710	D710	PD/1043	21664 / 21665
7584 D711	D711	PD/566	
7585 D579	D579	PD/445	21845
7587 D716	D716	PD/612	23032
7589 D721	D721	PD/613	23558 / 21915
7590 D722	D722	PD/614	23780
7591 D724	D724	PD/710	
7592 D946 7592 D947	D946 D947	PD/1044	
7593 D726	D726	PD/110	23663
7593 D726	D726	PD/776	
7594 D727	D727	PD/567	
7596 D729	D729	PD/615	
7597 D730 7678 D730	D730	PD/515	
7601 D493	D493	PD/1045	

FMSI	CODE FMSI	FRAS-LE	WVA
7602 D733	D733	PD/616	23593
7603 D734	D734	PD/617	
7605 D736	D736	PD/61	21829
7605 D819	D819	PD/729	
7608 D739	D739	PD/1046	21900
7610 D674	D674	PD/705	
7611 D741	D741	PD/712	23294
7616 D746	D746	PD/485	
7616 D820	D820	PD/623	
7617 D748	D748	PD/618	
7618 D749	D749	PD/713	
7620 D752	D752	PD/714	
7621 D753	D753	PD/1047	
7622 D754	D754	PD/1048	
7623 D730	D730	PD/510	
7624 D755	D755	PD/1049	
7625 D756 7625 D824	D756 D824	PD/62	
7626 D757	D757	PD/63	
7627 D758	D758	PD/569	
7628 D760	D760	PD/1007-A	23193
7631 D763	D763	PD/716	
7632 D764	D764	PD/717	
7635 D768	D768	PD/73	21974
7636 D769	D769	PD/143	
7636 D1032	D1032	PD/144	
7637 D770	D770	PD/619	23572
7640 D773	D773	PD/819	23539
7641 D774	D774	PD/486	23442
7644 D777 7972 D1066	D777 D1066	PD/570	
7647 D779	D779	PD/1050	21919
7652 D784	D784	PD/571	
7653 D785	D785	PD/572	
7654 D786	D786	PD/145	
7655 D786	D786	PD/146	
7656 D787	D787	PD/719	
7656 D1506	D1506	PD/1388	
7660 D790	D790	PD/620	23631 / 23336
7661 D791	D791	PD/573	23339
7662 D792	D792	PD/574	
7663 D793	D793	PD/721	
7664 D794	D794	PD/786	23073
7665 D795	D795	PD/1051	
7666 D796	D796	PD/37	21190 / 21192 / 21201
7667 D797	D797	PD/475	23234
7670 D798	D798	PD/787	
7671 D799	D799	PD/527	21775 / 21776
7672 D801	D801	PD/352-A	21395
7673 D802	D802	PD/622	
7674 D803	D803	PD/575	23635
7675 D804	D804	PD/722	
7676 D805	D805	PD/1008	23423
7677 D655	D655	PD/777	
7679 D806	D806	PD/76	
7687 D812	D812	PD/724	
7688 D813	D813	PD/725	23543
7690 D816	D816	PD/442	23154
7691 D817	D817	PD/788	
7693 D818	D818	PD/674	

FMSI	CODE FMSI	FRAS-LE	WVA
7694 D821	D821	PD/576	
7694 D859	D859	PD/627	
7695 D822	D822	PD/789	
7695 D822	D822	PD/789	23510 / 23511 / 23512
7697 D825	D825	PD/624	
7698 D826	D826	PD/625	
7699 D827	D827	PD/626	
7700 D792	D792	PD/720	
7701 D828	D828	PD/730	
7702 D829	D829	PD/1052	23178 / 23179
7703 D830	D830	PD/536	
7704 D831	D831	PD/496	23348 / 23349 / 23350
7706 D833	D833	PD/365	
7707 D834	D834	PD/578	
7707 D975	D975	PD/760	
7709 D768	D768	PD/58-B	23187 / 23131
7710 D687	D687	PD/340-B	23392
7712 D837	D837	PD/1053	21923
7713 D838	D838	PD/1054	21861
7715 D840	D840	PD/525-A	21938
7716 D841	D841	PD/531	23532
7719 D843	D843	PD/530	23787
7720 D844	D844	PD/732	
7723 D847	D847	PD/1009	23271
7724 D848	D848	PD/1010	23078
7725 D912	D912	PD/1055-A	23280
7729 D852	D852	PD/406-B	21479 / 23445
7732 D856 7988 D856	D856 D856	PD/580	23638
7733 D857	D857	PD/581	23640 / 23642
7734 D858	D858	PD/582	24036 / 24037 / 24038
7735 D752	D752	PD/772	
7738 D862	D862	PD/628	23585
7739 D864	D864	PD/630	23569
7740 D865	D865	PD/735	
7741 D866	D866	PD/631	23584
7742 D867	D867	PD/538	24066
7743 D868	D868	PD/632	23582
7744 D869	D869	PD/134	
7747 D872	D872	PD/1011	23144
7749 D874	D874	PD/1056	
7750 D875	D875	PD/1012-B	23190
7752 D1096	D1096	PD/1057	
7753 D876	D876	PD/1013	21898
7759 D882	D882	PD/737	
7760 D883	D883	PD/738	
7761 D884	D884	PD/790	
7763 D886	D886	PD/480	23353
7766 D888	D888	PD/1014	
7766 D888	D888	PD/1014	
7767 D889	D889	PD/791	
7774 D897	D897	PD/583	
7775 D898	D898	PD/584	
7777 D900	D900	PD/741	
7779 D1035	D1035	PD/817	24062 / 24063 / 24064 / 23234
7782 D904	D904	PD/742	24291
7783 D815	D815	PD/728	
7784 D905	D905	PD/585	23814 / 23871 / 23872
7785 D906	D906	PD/743	

FMSI	CODE FMSI	FRAS-LE	WVA
7786 D885	D885	PD/739	
7787 D908	D908	PD/745	23928
7788 D909	D909	PD/746	
7789 D910	D910	PD/586	23279
7790 D911	D911	PD/599	23557
7794 D913	D913	PD/577	
7795 D914	D914	PD/644	23868 / 23869
7815 D380	D380	PD/133	
7816 D442	D442	PD/154	29302
7817 D494	D494	PD/148	29017
7818 D225	D225	PD/127	
7820 D919	D919	PD/1473	23309 / 23310 / 24495
7822 D921	D921	PD/747	
7823 D922	D922	PD/792	
7824 D923	D923	PD/748	23836
7825 D924	D924	PD/635	23891 / 23892 / 23893
7829 D928	D928	PD/118	23021
7829 D928	D928	PD/118-A	23021
7830 D929	D929	PD/749	
7834 D931	D931	PD/348	
7835 D932	D932	PD/349	
7837 D934	D934	PD/750	
7838 D935	D935	PD/751	
7839 D937	D937	PD/636	
7841 D939	D939	PD/1058	
7842 D1060	D1060	PD/1059	
7843 D941	D941	PD/752	
7846 D945	D945	PD/755	24083
7848 D949	D949	PD/111	29153
7848 D949A	D949A	PD/111-A	29076
7849 D950	D950	PD/417	21576 / 21577
7849 D950A	D950A	PD/417-A	21576
7850 D951	D951	PD/659-A	21621
7851 D952	D952	PD/754	
7852 D953	D953	PD/770	
7853 D954	D954	PD/794	
7855 D956	D956	PD/756	
7859 D961	D961	PD/1060	
7860 D768	D768	PD/58	21974 / 23130
7863 D964	D964	PD/775	
7863 D981	D981	PD/588	
7864 D965	D965	PD/637	
7866 D966	D966	PD/757	
7867 D967	D967	PD/759	
7868 D966	D966	PD/758	
7870 D969	D969	PD/638	24056
7874 D1095	D1095	PD/1061	
7875 D974	D974	PD/1015	
7876 D830	D830	PD/534	
7877 D976	D976	PD/528	24024 / 24025 / 24026
7881 D974	D974	PD/589	
7883 D980	D980	PD/1062	
7885 D983	D983	PD/1016	
7886 D984	D984	PD/1017	
7887 D985	D985	PD/1474	
7890 D988	D988	PD/761	
7891 D989	D989	PD/639	
7895 D995	D995	PD/793	
7897 D996	D996	PD/762	

FMSI	CODE FMSI	FRAS-LE	WVA
7898 D997	D997	PD/763	
7899 D998	D998	PD/797	
7900 D999	D999	PD/798	
7901 D1000	D1000	PD/799	
7904 D1003	D1003	PD/1063	
7906 D1005	D1005	PD/764	
7907 D881	D881	PD/736	
7909 D1006	D1006	PD/341	21592
7909 D1006A	D1006A	PD/341-A	23901 / 23902
7910 D691 7910 D855	D691 D855	PD/562	
7911 D1007	D1007	PD/1064	
7914 D1010	D1010	PD/177	
7915 D1011 7915 D1083	D1011 D1083	PD/590	
7916 D1012	D1012	PD/591	
7917 D1013	D1013	PD/667	24068 / 24069 / 24070 / 23725 / 23726 / 23727 / 23728
7918 D1015	D1015	PD/1019	
7921 D1018	D1018	PD/592-B	23882
7926 D1021	D1021	PD/765	
7927 D1022	D1022	PD/800	
7928 D1024 7928 D1117	D1024 D1117	PD/1449-A	23885 / 23896 / 23897
7931 D1027	D1027	PD/123	29067
7932 D1028	D1028	PD/593	
7935 D1030	D1030	PD/1065	
7937 D1033	D1033	PD/766	
7939 D1036	D1036	PD/681	24701
7940 D1037	D1037	PD/723	24014 / 24015
7943 D1039	D1039	PD/801	24370 / 24954
7944 D1040	D1040	PD/1018	
7945 D1041	D1041	PD/802	
7946 D1043	D1043	PD/436	
7947 D1044	D1044	PD/767	23723 / 23724
7949 D1046	D1046	PD/1066	
7950 D1047	D1047	PD/803	
7951 D1048	D1048	PD/437	
7955 D1051	D1051	PD/629	23656
7957 D973	D973	PD/796	23482
7961 D1055	D1055	PD/804	
7962 D1056	D1056	PD/805	
7963 D1057	D1057	PD/806	
7965 D1058	D1058	PD/1020	
7968 D1062	D1062	PD/104	29835
7968 D1062A	D1062A	PD/104-A	
7969 D1064	D1064	PD/178	
7972 D1066	D1066	PD/640	
7973 D1067	D1067	PD/641	
7973 D1068	D1068	PD/642	
7974 D1069	D1069	PD/643	
7974 D1631	D1631	PD/1424	25562
7975 D1070	D1070	PD/1021	
7976 D1071	D1071	PD/768	24260
7979 D1074	D1074	PD/665	
7980 D1075	D1075	PD/769	
7983 D1078	D1078	PD/1067	
7985 D1080	D1080	PD/807	
7986 D1464	D1464	PD/1382	
7987 D1082	D1082	PD/1068	
7987 D1562	D1562	PD/1402	

FMSI	CODE FMSI	FRAS-LE	WVA
7991 D1084	D1084	PD/808	
7993 D1088	D1088	PD/726	
7994 D1089	D1089	PD/809	24342
7994 D1521	D1521	PD/1393	24342 / 25351
7997 D1092	D1092	PD/594	
7999 D1093	D1093	PD/810	
8121 D1130	D1130	PD/1450	23961
8200 D1094	D1094	PD/811	
8202 D1098	D1098	PD/1069	
8203 D1099	D1099	PD/1070	
8204 D1101	D1101	PD/1071	
8206 D1100	D1100	PD/1072	
8208 D1584	D1584	PD/1406	25297 / 25298 / 25299
8209 D1103	D1103	PD/1073	
8211 D1105	D1105	PD/812	
8212 D1107	D1107	PD/1000	24557 / 24588
8212 D1107	D1107	PD/1000-B	23587 / 23588 / 23589
8213 D1108	D1108	PD/1030	23914
8213 D1348	D1348	PD/1456	24483
8218 D1114	D1114	PD/813	
8220 D915	D915	PD/1232-B	23801 / 23912 / 23913
8225 D1119	D1119	PD/1074	
8226 D1120	D1120	PD/1075	
8227 D1121	D1121	PD/1022	23945
8231 D1124	D1124	PD/1076	
8247 D1137	D1137	PD/473	23081 / 23082 / 23083
8251 D1140	D1140	PD/65	20753
8252 D1141	D1141	PD/72	23057
8253 D1142	D1142	PD/535	24277
8254 D1143	D1143	PD/435	23597
8254 D1499	D1499	PD/1096	21978 / 21979 / 21980 / 21981
8255 D1145	D1145	PD/391-A	21388
8256 D1146	D1146	PD/338-A	21463
8257 D1147	D1147	PD/595	23463
8258 D1148	D1148	PD/478	23238 / 23239 / 23240
8266 D1156	D1156	PD/1279	24317 / 24318 / 24319
8267 D1157	D1157	PD/1093	24320 / 24321 / 24322
8268 D1158	D1158	PD/1023	
8269 D1159	D1159	PD/814	
8270 D1160	D1160	PD/815	
8272 D1161	D1161	PD/646	
8277 D1164	D1164	PD/647	
8277 D1192	D1192	PD/816	
8284 D1173	D1173	PD/54	
8288 D350	D350	PD/51	
8289 D1175	D1175	PD/497	23202 / 23203
8290 D1176	D1176	PD/46	23226
8301 D1184	D1184	PD/621	
8305 D1187	D1187	PD/596	21545
8306 D1125	D1125	PD/1277	24375 / 24376
8307 D1188	D1188	PD/1077	24346
8308 D1189	D1189	PD/77	
8309 D1190	D1190	PD/411-E	23124
8310 D1191	D1191	PD/597	
8312 D1194	D1194	PD/731	
8316 D1196	D1196	PD/55	21202
8318 D1198	D1198	PD/498-A	23917
8320 D1200	D1200	PD/503	
8321 D1201	D1201	PD/102	

FMSI	CODE FMSI	FRAS-LE	WVA
8322 D1202	D1202	PD/1287	24351 / 24352 / 24568 / 24569
8323 D1203	D1203	PD/116	29042 / 29059 / 29060 / 29061 / 29062 / 29087 / 29105 / 29106 / 29108 / 29109 / 29163 / 29202 / 29278 / 29196
8324 D1204	D1204	PD/1288	23984
8325 D1205	D1205	PD/516	23669
8326 D1206	D1206	PD/676	
8328 D1208	D1208	PD/106	
8329 D1209	D1209	PD/50	
8330 D1210	D1210	PD/740	24336
8331 D1211	D1211	PD/744	24337
8331 D1293	D1293	PD/1078	
8332 D1212	D1212	PD/753	24338
8334 D1214	D1214	PD/500	23879 / 23880
8335 D1215	D1215	PD/491	23766
8336 D1216	D1216	PD/512	23816
8338 D866	D866	PD/734	
8340 D1219	D1219	PD/648	23406 / 23407
8342 D1221	D1221	PD/405-E	21674
8345 D1226	D1226	PD/1451	23623 / 23624
8362 D1245	D1245	PD/1345-E	24133 / 24174
8366 D1014	D1014	PD/1079	
8368 D125	D125	PD/1339	
8370 D1252	D1252	PD/1355	
8371 D1253	D1253	PD/479	23022
8377 D1258	D1258	PD/1080	24544
8378 D1259	D1259	PD/1081	24545
8379 D1261	D1261	PD/668	23993
8381 D1264	D1264	PD/711	24510 / 24511 / 24512
8382 D1265	D1265	PD/185	
8383 D1268	D1268	PD/661	29200
8385 D1269	D1269	PD/818	23974
8390 D1274	D1274	PD/1082	
8391 D1275	D1275	PD/715	24498 / 24499 / 24500
8392 D1608	D1608	PD/1413	25466 / 25467 / 25468
8394 D1278	D1278	PD/1083	
8397 D1281	D1281	PD/1498	25434
8397 D1585	D1585	PD/1407	25434
8400 D1202	D1202	PD/1352	
8401 D1284	D1284	PD1487	25153 / 25154 / 25155
8402 D1285	D1285	PD/1353	
8403 D1509	D1509	PD/1390	
8405 D1288	D1288	PD/1025	
8410 D1169	D1169	PD/1024	
8411 D1294	D1294	PD/1452	24170 / 24171
8414 D1297	D1297	PD/1341	24488 / 24489 / 24490
8417 D1301	D1301	PD/1298	
8418 D1302	D1302	PD/1299	
8419 D1303	D1303	PD/1084	
8420 D1304	D1304	PD/1085	
8421 D1306	D1306	PD/1301	24123 / 24124
8422 D1307	D1307	PD/1453	24496
8423 D1308	D1308	PD/1302	
8424 D1309	D1309	PD/1303	
8425 D1310	D1310	PD/129	29131 / 29156
8426 D1311	D1311	PD/187	29187
8427 D1312	D1312	PD/112	29090
8428 D1445	D1445	PD/1356	
8428 D1594	D1594	PD/1368	25337 / 25338 / 25339

FMSI	CODE FMSI	FRAS-LE	WVA
8429 D1314	D1314	PD/1332	
8430 D1316	D1316	PD/662	29192
8431 D1317	D1317	PD/663	29190
8432 D1318	D1318	PD/664	29217
8433 D1321	D1321	PD/598	23241
8434 D1322	D1322	PD/1454	24409 / 24743
8435 D1323	D1323	PD/149	29188
8438 D1326	D1326	PD/300	
8439 D1327	D1327	PD/1026	24604 / 24605
8440 D1328	D1328	PD/1086	
8441 D1329	D1329	PD/1087	
8447 D1336	D1336	PD/1088	
8453 D1342	D1342	PD/1455	24310 / 24456
8453 D1342	D1342	PD/1342	24310 / 24456
8455 D1344	D1344	PD/1358	
8456 D1345	D1345	PD/672	
8463 D1354	D1354	PD/1320	24610 / 24611 / 24612
8466 D1357	D1357	PD/1344	23881
8467 D1358	D1358	PD/1333	
8479 D1369	D1369	PD/172	29158
8480 D1370	D1370	PD/173	29189
8486 D1375	D1375	PD/1457-B	24332 / 24333 / 24334
8487 D1376	D1376	PD/1089	
8488 D1377	D1377	PD/1090	
8489 D1651	D1651	PD/1431	24162
8490 D1381	D1381	PD/1458	24172 / 24173
8502 D1394	D1394	PD/1492	
8505 D1397	D1397	PD/1092	23966 / 23987 / 23988
8506 D1398	D1398	PD/1334	
8515 D1407	D1407	PD/125	29030 / 29083 / 29113
8517 D987	D987	PD/1475	
8525 D1412	D1412	PD/1459	24399 / 24875
8527 D1413	D1413	PD/1497	24915 / 24916 / 24917
8543 D1426	D1426	PD/1460	24659
8544 D1427	D1427	PD/1461	25085
8549 D1432	D1432	PD/1343	
8555 D1437	D1437	PD/520	23581
8556 D1438	D1438	PD/131	29126 / 29159
8575 D1439	D1439	PD/1366	
8577 D1441	D1441	PD/186	29120
8595 D1444	D1444	PD/1351	
8614 D1295	D1295	PD/1296	24501
8615 D1447	D1447	PD/1462	25187 / 25188 / 25189
8642 D1452	D1452	PD/1463	24685
8643 D1453	D1453	PD/1463	24452 / 24721
8653 D1454	D1454	PD/1097	24283 / 24285 / 24285
8655 D1455	D1455	PD/1354	
8656 D1456	D1456	PD/1465	24563
8657 D1457	D1457	PD/1379	20104
8658 D1482	D1482	PD/465	20973 / 20974
8661 D1461	D1461	PD/1380	23258 / 23259 / 23262 / 23263
8663 D1463	D1463	PD/1381	
8664 D1465	D1465	PD/1383	
8667 D1470	D1470	PD/1514	25034
8668 D1468	D1468	PD/1102	25096 / 25097 / 25098
8671 D1471	D1471	PD/1384	
8672 D1473	D1473	PD/1466	24561 / 24562
8674 D1475	D1475	PD/1385	23340 / 23341 / 23342
8689 D1489	D1489	PD/1099-B	24468 / 24469

FMSI	CODE FMSI	FRAS-LE	WVA
8691 D1491	D1491	PD/1386	23973 / 24403
8698 D1498	D1498	PD/1357	
8699 D1500	D1500	PD/1387	23099
8701 D1502	D1502	PD/1029-A	24486
8715 D1508	D1508	PD/1389	
8720 D1511	D1511	PD/1391	
8721 D1512	D1512	PD/1392	
8726 D1517	D1517	PD/161	29142
8727 D1518	D1518	PD/124	29088
8728 D1519	D1519	PD/771	24529 / 24530
8730 D1522	D1522	PD/1101	25034 / 25035 / 25036
8731 D1523	D1523	PD/1394	25246
8733 D1525	D1525	PD/138	29124 / 29155
8735 D1527	D1527	PD/170	29143
8736 D1528	D1528	PD/1091-A	24485
8742 D1533	D1533	PD/1395	23284
8742 D1617	D1617	PD/1416	2361
8745 D1536	D1536	PD/673-B	23711 / 23712
8746 D1537	D1537	PD/1396	24349
8748 D1540	D1540	PD/1397-B	24466
8749 D1541	D1541	PD/346	23600
8750 D1542	D1542	PD/1398	23215 / 24325
8751 D1543	D1543	PD/1348	
8753 D1545	D1545	PD/1399	24739 / 24740
8754 D1554	D1554	PD/1401	25478 / 25479
8758 D1549	D1549	PD/1374	25158 / 25159
8762 D1552	D1552	PD/1400	
8763 D1553	D1553	PD/685	
8767 D1555	D1555	PD/1028	
8767 D1555	D1555	PD/1028-B	24484
8768 D1556	D1556	PD/1100	
8775 D1566	D1566	PD/1359	24597 / 24598 / 24609
8776 D1567	D1567	PD/1098	25209 / 25210
8777 D1568	D1568	PD/88	
8778 D1569	D1569	PD/1403	25410 / 25411 / 25412
8780 D1571	D1571	PD/669	
8781 D1572	D1572	PD/689	
8784 D1574	D1574	PD/1027	24353 / 24354
8785 D1547	D1547	PD/1369	24606 / 25214
8791 D1578	D1578	PD/1404	
8793 D1581	D1581	PD/1405-A	29229 / 29230
8794 D1582	D1582	PD/501	23921
8800 D1589	D1589	PD/1408	25378 / 25379
8801 D1590	D1590	PD/1364	25268 / 25269 / 25270
8804 D1592	D1592	PD/1365	24724 / 24725 / 24726
8811 D1596	D1596	PD/1410	25376 / 25377
8815 D1601	D1601	PD/633	24275 / 24411 / 24275
8816 D1602	D1602	PD/1412	
8824 D1611	D1611	PD/1414	25449 / 25450
8825 D1612	D1612	PD/1415	25458 / 25459 / 24460
8825 D1719	D1719	PD/135	23961
8828 D1615	D1615	PD/1095-A	24008
8829 D1616	D1616	PD/509-A	23705 / 23706
8829 D1616	D1616	PD/509-B	23705 / 23706 / 23707
8831 D1619	D1619	PD/1417	21436
8833 D1621	D1621	PD/1335	24150
8834 D1622	D1622	PD/1418-A	29160
8835 D1487	D1487	PD/122	29121
8836 D1623	D1623	PD/1419	25564
8837 D1624	D1624	PD/1420	25540 / 25541

FMSI	CODE FMSI	FRAS-LE	WVA
8840 D1625	D1625	**PD/1421**	25552 / 25553 / 25554
8844 D1627	D1627	**PD/1377**	24914 / 24538
8844 D1627	D1627	**PD/1422**	24538 / 24914
8845 D1628	D1628	**PD/1423**	24708
8860 D1460	D1460	**PD/1378**	23200 / 23201
8865 D1638	D1638	**PD/1425**	23619
8867 D164	D164	**PD/1426**	
8873 D1645	D1645	**PD/1427**	25555 / 25556
8875 D1647	D1647	**PD/1428**	
8877 D1649	D1649	**PD/1429**	25588 / 25589
8878 D1650	D1650	**PD/1430**	25581 / 25582
8882 D1653	D1653	**PD/1432**	25591 / 25592 / 25593
8883 D1654	D1654	**PD/1494**	25792 / 25793 / 25794
8888 D1661	D1661	**PD/1479**	25321
8905 D1676	D1676	**PD/1434**	25632 / 25633 / 25634
8906 D1677	D1677	**PD/1433**	25149 / 25150 / 25151
8922 D1696	D1696	**PD1470**	24660
8924 D1700	D1700	**PD/1411**	
8931 D1708	D1708	**PD/196**	29174 / 29219 / 29204 / 29218 / 29226
8950 D1726	D1726	**PD/1488**	25610 / 25611 / 25612
8951 D1727	D1727	**PD/1489**	25599 / 25600 / 25601
8989 D1760	D1760	**PD/1490-B**	25683 / 25684
8990 D1761	D1761	**PD/1491**	25008 / 25010
9044 D1809	D1809	**PD/1496**	25733 / 22169 / 22170
7019A D123	D123	**PD/537**	
7070A D154	D154	**PD/517**	

FMSI	CODE FMSI	FRAS-LE	WVA
7070C D183	D183	**PD/540**	
7082C D199	D199	**PD/679**	
7084A D153	D153	**PD/1001**	
7106A D257	D257	**PD/542**	
7125A D249	D249	**PD/513**	
7125A D387	D387	**PD/374**	21830
7134A D220	D220	**PD/543**	
7164A D259	D259	**PD/568**	21818
7214A D52	D52	**PD/774**	20215
7280A D392	D392	**PD/606**	
728A D52	D52	**PD/324**	
7304A D417	D417	**PD/1033**	
7403A D521 7406 D524	D521 D524	**PD/504**	21813
7404A D522	D522	**PD/553**	21815 / 21817
7424A D544	D544	**PD/780**	
7434A D555	D555A	**PD/384-A**	20676
7438A D658	D658	**PD/701**	
7438B D641	D641	**PD/392**	
7470A D591	D591	**PD/396**	23044
7502A D666	D666	**PD/556**	
7511A D633	D633	**PD/395**	23740
7518A D642	D642	**PD/492**	
7530A D650	D650	**PD/135**	
7545A D667	D667	**PD/410**	23627
8893D1665	D1665	**PD/1513**	

CODE FMSI	FRAS-LE	WVA	FMSI
D2	**PD/7**	20030	719 D2
D4	**PD/9**	20027	724 D4
D9	**PD/313**	20007	721 D9
D21 D30	**PD/5**	20009	755 D21 735 D30
D31	**PD/6**	20034	7255 D31
D37	**PD/587**	20218	780 D37
D45	**PD/1**	20011	7021 D45
D49	**PD/301**	20347	793 D49
D50	**PD/19-C**		788 D50 7013A D50
D52	**PD/774**	20215	7214A D52
D52	**PD/324**		728A D52
D54	**PD/308**	20073	798 D54
D71	**PD/319**	20074	7001 D71
D77	**PD/311-A**	20145	7010 D77
D96	**PD/17**	20228	7031 D96
D96	**PD/16**	20228	7032 D96
D109	**PD/307**	20323	7043 D109
D120	**PD/539**		7054 D120
D123	**PD/537**		7019A D123
D149	**PD/541**		7081 D149
D153	**PD/1001**		7084A D153
D154	**PD/517**		7070A D154
D157	**PD/468-A**	20271	7086 D157
D183	**PD/540**		7070C D183
D184	**PD/557**		7108 D184
D193	**PD/312-A**	20632	7116 D193
D199	**PD/679**		7082C D199
D201	**PD/303-A**		7123 D201
D207	**PD/1031**		7127 D207
D215	**PD/499**		7136 D215
D220	**PD/543**		7134A D220
D224	**PD/126**		7141 D224
D225	**PD/127**		7818 D225
D227	**PD/467**	20778	7143 D227
D227	**PD/466**	20778	7177 D227
D228	**PD/334**	21144	7144 D228
D233	**PD/75**	20958	7251 D233
D236	**PD/653**		7149 D236
D242	**PD/680**	20870	7153 D242
D249	**PD/513**		7125A D249
D257	**PD/542**		7106A D257
D259	**PD/568**	21818	7164A D259
D265	**PD/136**		7170 D265
D266 D441	**PD/428**	21119	7282 D266 7282 D441
D269	**PD/545**		7179 D269
D273	**PD/386**	21331	7178 D273
D275	**PD/544**	20449	7155 D275
D277	**PD/401**	21043	7180 D277
D280	**PD/495**	20887	7183 D280
D289	**PD/546**		7192 D289
D292	**PD/305-A**	20937	7194 D292
D298	**PD/39**	20907	7201 D298
D298	**PD/48**	20907 / 20908	7201 D298
D298A	**PD/68**	23229	7201 D298A
D303	**PD/429**	21158	7205 D303
D325	**PD/682**		7223 D325
D326	**PD/605**		7224 D326
D332	**PD/1131**	20031	7186 D332

CODE FMSI	FRAS-LE	WVA	FMSI
D333	**PD/427**	21347 / 21348 / 21349	7228 D333
D340	**PD/362**	20961	7234 D340
D340	**PD/59**	20961	7335 D340
D349	**PD/377**	21373	7241 D349
D350	**PD/23**	21193	7242 D350
D350	**PD/25**	21193	7242 D350
D350	**PD/28**	21962	7242 D350
D350	**PD/51**		8288 D350
D351	**PD/321-A**	21016	7244 D351
D356	**PD/426**	21372	7247 D356
D360 D375	**PD/523**		788 D360 7264 D375
D363	**PD/357**	21543 / 21544	7253 D363 7347 D363
D366	**PD/344**	20008	7257 D366
D368	**PD/547**		7259 D368
D369	**PD/502**		7259 D369
D370	**PD/548**		7260 D370
D371	**PD/322-A**	20905	7261 D371
D374	**PD/457**	21312 / 21313 / 21314	7233 D374
D376	**PD/519**		7265 D376
D378	**PD/424**	21059	7267 D378
D380	**PD/133**		7815 D380
D383	**PD/683**		7272 D383
D384	**PD/13**	20386	7273 D384
D387	**PD/374**	21830	7125A D387
D389	**PD/1002**		7276 D389
D392	**PD/606**		7280A D392
D394	**PD/1003**		7395 D394
D396	**PD/488**	21607	7286 D396
D401	**PD/440**		7290 D401
D404	**PD/549**	21012	7293 D404
D405	**PD/463-B**	21245	7294 D405
D411	**PD/654**		7299 D411
D412	**PD/1032**		7300 D412
D417	**PD/1033**		7304A D417
D418	**PD/378**	21500	7305 D418
D419	**PD/1034**		7306 D419
D423	**PD/1159**	20941	7311 D423
D426	**PD/41**	21140	7314 D426
D429	**PD/684**		7146 D429
D430	**PD/550**	21561	7318 D430
D433	**PD/607**	21537	7320 D433
D436	**PD/115**	21679 / 21785 / 21789 / 21790	7298 D436
D436	**PD/773**		7549 D436
D442	**PD/154**	29302	7816 D442
D450	**PD/608**		7330 D450
D451	**PD/379**	21333	7331 D451
D452	**PD/380**	21344 / 21345 / 21346	7332 D452
D454	**PD/326-A**	21209 / 21210	7334 D454
D455	**PD/361-A**	20455	7073 D455
D456	**PD/455**	21338	7336 D456
D459 (big clip)	**PD/552**		7339 D459 (big clip)
D459 (small clip)	**PD/551**		7339 D459 (small clip)
D462	**PD/453**	21527	7342 D462
D464	**PD/666**	21553	7344 D464
D465	**PD/397**	21497	7345 D465
D465	**PD/563**	21497	7573 D465
D466	**PD/376**	21654	7219 D466

CODE FMSI	FRAS-LE	WVA	FMSI
D470	PD/423	21495	7350 D470
D471	PD/778	21703	7351 D471
D473	PD/132	21539	7353 D473
D476	PD/686		7357 D476
D477	PD/708		7358 D477
D484	PD/469	21647	7365 D484
D491	PD/399	20410	7371 D491
D493	PD/1045		7601 D493
D494	PD/148	29017	7817 D494
D497 D440	PD/382	21773	7376 D497 7293 D440
D501	PD/1035		7381 D501
D503	PD/449	21651	7382 D503
D505	PD/609		7384 D505
D506	PD/506		7385 D506
D507	PD/687		7386 D507
D508	PD/688		7387 D508
D509	PD/1036		7388 D509
D510	PD/532	21657	7389 D510
D510	PD/660		7389 D510
D511	PD/1037		7390 D511
D516	PD/327	21096	7394 D516
D518	PD/464-B	21237	7398 D518
D520	PD/458-B	21897	7401 D520
D521 D524	PD/504	21813	7403A D521 7406 D524
D522	PD/553	21815 / 21817	7404A D522
D529	PD/779		7410 D529
D530	PD/383	21363	7412 D530
D535	PD/452	21650	7417 D535
D536	PD/690		7418 D536
D537	PD/554	21721	7418 D537
D540	PD/691	21713	7421 D540
D540	PD/692		7533 D540
D544	PD/780		7424A D544
D546	PD/1004		7425 D546
D551	PD/781		7430 D551
D555	PD/384	21911	7434 D555
D555A	PD/384-A	20676	7434A D555
D556	PD/419	21907	7435 D556
D557	PD/524		7436 D557
D558	PD/385	21292	7437 D558
D564	PD/398	21738	7443 D564
D567	PD/450	21840	7447 D567
D568	PD/388	21879	7448 D568
D569	PD/328	20887	7209 D569
D570	PD/447	21730	7450 D570
D576	PD/555		7456 D576
D579	PD/445	21845	7585 D579
D580	PD/693		7460 D580
D581	PD/487	21634 / 21635	7461 D581
D588	PD/1039		7468 D588
D590	PD/483-A	21147	7469 D590
D591	PD/396	23044	7470A D591
D597	PD/1040		7475 D597
D598	PD/678		7476 D598
D600	PD/694		7478 D600
D601	PD/389	23637	7479 D601
D606	PD/695	21947	7487 D606
D610	PD/696		7489 D610

CODE FMSI	FRAS-LE	WVA	FMSI
D617	PD/782		7493 D617
D618	PD/783		7494 D618
D619	PD/784		7495 D619
D621	PD/493	21694	7497 D621
D623	PD/697		7384 D623
D627	PD/698		7504 D627
D627	PD/699		7524 D627
D632	PD/356		7503 D632
D633	PD/395	23740	7511A D633
D635	PD/415		7513 D635
D636	PD/1041		7514 D636
D637	PD/610	21755	7515 D637
D638	PD/406	21479	7516 D638
D639	PD/1471	21471	7517 D639
D641	PD/392		7438B D641
D642	PD/492		7518A D642
D643	PD/785		7520 D643
D645	PD/489	21439	7523 D645
D646	PD/656		7527 D646
D648 D745	PD/352	21394	7528 D648 7528 D745
D649	PD/24	20753	7529 D649
D649	PD/24-B		7529 D649
D649	PD/34		7529 D649
D650	PD/135		7530A D650
D652	PD/332	23472	7532 D652
D653	PD/700		7318 D653
D655	PD/559		7535 D655
D655	PD/777		7677 D655
D658	PD/701		7438A D658
D659	PD/702		7537 D659
D660	PD/441	21142	7540 D660
D661	PD/402-A	21586 / 21587	7541 D661
D663	PD/558		7514 D663
D664	PD/560		7543 D664
D666	PD/556		7502A D666
D667	PD/410	23627	7545A D667
D668	PD/1005		7546 D668
D671	PD/474	21519	7551 D671
D672	PD/703		7553 D672
D673	PD/508		7554 D673
D674	PD/704		7555 D674
D674	PD/705		7610 D674
D675	PD/655		7425 D675
D677	PD/611	23400	7557 D677
D679	PD/137		7558 D679
D680	PD/432	23314	7559 D680
D681	PD/1042	21642 / 21486	7560 D681
D682	PD/1472	21484 / 21485	7561 D682
D683	PD/1038		7427 D683
D684	PD/602	20669 / 21366	7571 D684
D684A	PD/336	20168	7571 D684A
D687	PD/340-B	23392	7710 D687
D688	PD/42	20547 / 21353	7563 D688
D691 D855	PD/561	23420	7566 D691 7566 D855
D691 D855	PD/562		7910 D691 7910 D855
D693	PD/36	21832	7568 D693
D694	PD/367	21866	7569 D694
D694	PD/368	21866	7569 D694

CODE FMSI	FRAS-LE	WVA	FMSI
D695 D562	**PD/387**	21601	7441 D695 7441 D562
D696	**PD/337**	20168	7570 D696
D696A	**PD/329**	20168	7570 D696A
D698	**PD/677**		7387 D698
D699	**PD/564**	23358	7574 D699
D700	**PD/706**	21725	7329 D700
D701	**PD/1006**		7575 D701
D702	**PD/565**		7576 D702
D704	**PD/413**	21945	7578 D704
D706	**PD/407**	21882	7580 D706
D707	**PD/707**	23513	7581 D707
D709	**PD/38**	21050	7582 D709 7614 D709
D710	**PD/1043**	21664 / 21665	7583 D710
D711	**PD/566**		7584 D711
D712	**PD/418**	21822	7358 D712
D714	**PD/709**		7387 D714
D716	**PD/612**	23032	7587 D716
D721	**PD/613**	23558 / 21915	7589 D721
D722	**PD/614**	23780	7590 D722
D723	**PD/675**		7412 D723
D724	**PD/710**		7591 D724
D726	**PD/110**	23663	7593 D726
D726	**PD/776**		7593 D726
D727	**PD/567**		7594 D727
D729	**PD/615**		7596 D729
D730	**PD/515**		7597 D730 7678 D730
D730	**PD/510**		7623 D730
D733	**PD/616**	23593	7602 D733
D734	**PD/617**		7603 D734
D736	**PD/61**	21829	7605 D736
D739	**PD/1046**		7608 D739
D741	**PD/712**	23294	7611 D741
D746	**PD/485**		7616 D746
D748	**PD/618**		7617 D748
D749	**PD/713**		7618 D749
D752	**PD/714**		7620 D752
D752	**PD/772**		7735 D752
D753	**PD/1047**		7621 D753
D754	**PD/1048**		7622 D754
D755	**PD/1049**		7624 D755
D756 D824	**PD/62**		7625 D756 7625 D824
D757	**PD/63**		7626 D757
D758	**PD/569**		7627 D758
D760	**PD/1007-A**	23193	7628 D760
D763	**PD/716**		7631 D763
D764	**PD/717**		7632 D764
D768	**PD/73**	21974	7635 D768
D768	**PD/58-B**	23187 / 23131	7709 D768
D768	**PD/58**	21974 / 23130	7860 D768
D769	**PD/143**		7636 D769
D770	**PD/619**	23572	7637 D770
D773	**PD/819**	23539	7640 D773
D774	**PD/486**	23442	7641 D774
D777 D1066	**PD/570**		7644 D777 7972 D1066
D779	**PD/1050**	21919	7647 D779
D784	**PD/571**		7652 D784
D785	**PD/572**		7653 D785

CODE FMSI	FRAS-LE	WVA	FMSI
D786	**PD/145**		7654 D786
D786	**PD/146**		7655 D786
D787	**PD/719**		7656 D787
D790	**PD/620**	23631 / 23336	7660 D790
D791	**PD/573**	23339	7661 D791
D792	**PD/574**		7662 D792
D792	**PD/720**		7700 D792
D793	**PD/721**		7663 D793
D794	**PD/786**	23073	7664 D794
D795	**PD/1051**		7665 D795
D796	**PD/37**	21190 / 21192 / 21201	7666 D796
D797	**PD/475**	23234	7667 D797
D798	**PD/787**		7670 D798
D799	**PD/527**	21775 / 21776	7671 D799
D801	**PD/352-A**	21395	7672 D801
D802	**PD/622**		7673 D802
D803	**PD/575**	23635	7674 D803
D804	**PD/722**		7675 D804
D805	**PD/1008**	23423	7676 D805
D806	**PD/76**		7679 D806
D812	**PD/724**		7687 D812
D813	**PD/725**	23543	7688 D813
D815	**PD/727**		7318 D815
D815	**PD/728**		7783 D815
D816	**PD/442**	23154	7690 D816
D817	**PD/788**		7691 D817
D818	**PD/674**		7693 D818
D819	**PD/729**		7605 D819
D820	**PD/623**		7616 D820
D821	**PD/576**		7694 D821
D822	**PD/789**		7695 D822
D822	**PD/789**	23510 / 23511 / 23512	7695 D822
D825	**PD/624**		7697 D825
D826	**PD/625**		7698 D826
D827	**PD/626**		7699 D827
D828	**PD/730**		7701 D828
D829	**PD/1052**	23178 / 23179	7702 D829
D830	**PD/536**		7703 D830
D830	**PD/534**		7876 D830
D831	**PD/496**	23348 / 23349 / 23350	7704 D381
D833	**PD/365**		7706 D833
D834	**PD/578**		7707 D834
D837	**PD/1053**	21923	7712 D837
D838	**PD/1054**	21861	7713 D838
D840	**PD/525-A**	21938	7715 D840
D841	**PD/531**	23532	7716 D841
D843	**PD/530**	23787	7719 D843
D844	**PD/732**		7720 D844
D847	**PD/1009**	23271	7723 D847
D848	**PD/1010**	23078	7724 D848
D852	**PD/406-B**	21479 / 23445	7729 D852
D856 D856	**PD/580**	23638	7732 D856 7988 D856
D857	**PD/581**	23640 / 23642	7733 D857
D858	**PD/582**	24036 / 24037 / 24038	7734 D858
D859	**PD/627**		7694 D859
D862	**PD/628**	23585	7738 D862
D864	**PD/630**	23569	7739 D864
D865	**PD/735**		7740 D865
D866	**PD/631**	23584	7741 D866

CODE FMSI	FRAS-LE	WVA	FMSI
D866	PD/734		8338 D866
D867	PD/538	24066	7742 D867
D868	PD/632	23582	7743 D868
D869	PD/134		7744 D869
D872	PD/1011	23144	7747 D872
D874	PD/1056		7749 D874
D875	PD/1012-B	23190	7750 D875
D876	PD/1013	21898	7753 D876
D881	PD/736		7907 D881
D882	PD/737		7759 D882
D883	PD/738		7760 D883
D884	PD/790		7761 D884
D885	PD/739		7786 D885
D886	PD/480	23353	7763 D886
D888	PD/1014		7766 D888
D888	PD/1014		7766 D888
D889	PD/791		7767 D889
D897	PD/583		7774 D897
D898	PD/584		7775 D898
D900	PD/741		7777 D900
D904	PD/742	24291	7782 D904
D905	PD/585	23814 / 23871 / 23872	7784 D905
D906	PD/743	23855	7785 D906
D908	PD/745	23928	7787 D908
D909	PD/746		7788 D909
D910	PD/586	23279	7789 D910
D911	PD/599	23557	7790 D911
D912	PD/1055-A	23280	7725 D912
D913	PD/577		7794 D913
D914	PD/644	23868 / 23869	7795 D914
D915	PD/1232-B	23801 / 23912 / 23913	8220 D915
D919	PD/1473	23309 / 23310 / 24495	7820 D919
D921	PD/747		7822 D921
D922	PD/792		7823 D922
D923	PD/748	23836	7824 D923
D924	PD/635	23891 / 23892 / 23893	7825 D924
D928	PD/118	23021	7829 D928
D928	PD/118-A	23021	7829 D928
D929	PD/749		7830 D929
D931	PD/348		7834 D931
D932	PD/349		7835 D932
D934	PD/750		7837 D934
D935	PD/751		7838 D935
D937	PD/636		7839 D937
D939	PD/1058		7841 D939
D941	PD/752		7843 D941
D945	PD/755	24083	7846 D945
D946 D947	PD/1044		7592 D946 7592 D947
D949	PD/111	29153	7848 D949
D949A	PD/111-A	29076	7848 D949A
D950	PD/417	21576 / 21577	7849 D950
D950A	PD/417-A	21576	7849 D950A
D951	PD/659-A	21621	7850 D951
D952	PD/754		7851 D952
D953	PD/770		7852 D953
D954	PD/794		7853 D954
D956	PD/756		7855 D956
D961	PD/1060		7859 D961
D964	PD/775		7863 D964

CODE FMSI	FRAS-LE	WVA	FMSI
D965	PD/637		7864 D965
D966	PD/757		7866 D966
D966	PD/758		7868 D966
D967	PD/759		7867 D967
D969	PD/638	24056	7870 D969
D973	PD/796	23482	7957 D973
D974	PD/1015		7875 D974
D974	PD/589		7881 D974
D975	PD/760		7707 D975
D976	PD/528	24024 / 24025 / 24026	7877 D976
D980	PD/1062		7883 D980
D981	PD/588		7863 D981
D983	PD/1016		7885 D983
D984	PD/1017		7886 D984
D985	PD/1474		7887 D985
D987	PD/1475		8517 D987
D988	PD/761		7890 D988
D989	PD/639		7891 D989
D995	PD/793		7895 D995
D996	PD/762		7897 D996
D997	PD/763		7898 D997
D998	PD/797		7899 D998
D999	PD/798		7900 D999
D1000	PD/799		7901 D1000
D1003	PD/1063		7904 D1003
D1005	PD/764		7906 D1005
D1006	PD/341	21592	7909 D1006
D1006A	PD/341-A	23901 / 23902	7909 D1006A
D1007	PD/1064		7911 D1007
D1010	PD/177		7914 D1010
D1011 D1083	PD/590		7915 D1011 7915 D1083
D1012	PD/591		7916 D1012
D1013	PD/667	24068 / 24069 / 24070 / 23725 / 23726 / 23727 / 23728	7917 D1013
D1014	PD/1079		8366 D1014
D1015	PD/1019		7918 D1015
D1018	PD/592-B	23882	7921 D1018
D1021	PD/765		7926 D1021
D1022	PD/800		7927 D1022
D1024 D1117	PD/1449-A	23885 / 23896 / 23897	7928 D1024 7928 D1117
D1027	PD/123	29067	7931 D1027
D1028	PD/593		7932 D1028
D1030	PD/1065		7935 D1030
D1032	PD/144		7636 D1032
D1033	PD/766		7937 D1033
D1035	PD/817	24062 / 24063 / 24064 / 23234	7779 D1035
D1036	PD/681	24701	7939 D1036
D1037	PD/723	24014 / 24015	7940 D1037
D1039	PD/801	24370 / 24954	7943 D1039
D1040	PD/1018		7944 D1040
D1041	PD/802		7945 D1041
D1043	PD/436		7946 D1043
D1044	PD/767	23723 / 23724	7947 D1044
D1046	PD/1066		7949 D1046
D1047	PD/803		7950 D1047
D1048	PD/437		7951 D1048
D1051	PD/629	23656	7955 D1051
D1055	PD/804		7961 D1055

CODE FMSI	FRAS-LE	WVA	FMSI
D1056	**PD/805**		7962 D1056
D1057	**PD/806**		7963 D1057
D1058	**PD/1020**		7965 D1058
D1060	**PD/1059**		7842 D1060
D1062	**PD/104**	29835	7968 D1062
D1062A	**PD/104-A**		7968 D1062A
D1064	**PD/178**		7969 D1064
D1066	**PD/640**		7972 D1066
D1067	**PD/641**		7973 D1067
D1068	**PD/642**		7973 D1068
D1069	**PD/643**		7974 D1069
D1070	**PD/1021**		7975 D1070
D1071	**PD/768**	24260	7976 D1071
D1074	**PD/665**		7979 D1074
D1075	**PD/769**		7980 D1075
D1078	**PD/1067**		7983 D1078
D1080	**PD/807**		7985 D1080
D1082	**PD/1068**		7987 D1082
D1084	**PD/808**		7991 D1084
D1086	**PD/645**	24231 / 24232 / 24233	7418 D1086
D1088	**PD/726**		7993 D1088
D1089	**PD/809**	24342	7994 D1089
D1092	**PD/594**		7997 D1092
D1093	**PD/810**		7999 D1093
D1094	**PD/811**		8200 D1094
D1095	**PD/1061**		7874 D1095
D1096	**PD/1057**		7752 D1096
D1098	**PD/1069**		8202 D1098
D1099	**PD/1070**		8203 D1099
D1100	**PD/1072**		8206 D1100
D1101	**PD/1071**		8204 D1101
D1103	**PD/1073**		8209 D1103
D1105	**PD/812**		8211 D1105
D1107	**PD/1000**	24557 / 24588	8212 D1107
D1107	**PD/1000-B**	23587 / 23588 / 23589	8212 D1107
D1108	**PD/1030**	23914	8213 D1108
D1114	**PD/813**		8218 D1114
D1119	**PD/1074**		8225 D1119
D1120	**PD/1075**		8226 D1120
D1121	**PD/1022**	23945	8227 D1121
D1124	**PD/1076**		8231 D1124
D1125	**PD/1277**	24375 / 24376	8306 D1125
D1130	**PD/1450**	23961	8421 D1130
D1137	**PD/473**	23081 / 23082 / 23083	8247 D1137
D1140	**PD/65**	20753	8251 D1140
D1141	**PD/72**	23057	8252 D1141
D1142	**PD/535**	24277	8253 D1142
D1143	**PD/435**	23597	8254 D1143
D1145	**PD/391-A**	21388	8255 D1145
D1146	**PD/338-A**	21463	8256 D1146
D1147	**PD/595**	23463	8257 D1147
D1148	**PD/478**	23238 / 23239 / 23240	8258 D1148
D1156	**PD/1279**	24317 / 24318 / 24319	8266 D1156
D1157	**PD/1093**	24320 / 24321 / 24322	8267 D1157
D1158	**PD/1023**		8268 D1158
D1159	**PD/814**		8269 D1159
D1160	**PD/815**		8270 D1160
D1161	**PD/646**		8272 D1161
D1164	**PD/647**		8277 D1164

CODE FMSI	FRAS-LE	WVA	FMSI
D1169	**PD/1024**		8410 D1169
D1171 D1267	**PD/1337**		7286 D1171 7286 D1267
D1173	**PD/54**		8284 D1173
D1175	**PD/497**	23202 / 23203	8289 D1175
D1176	**PD/46**	23226	8290 D1176
D1184	**PD/621**		8301 D1184
D1187	**PD/596**	21545	8305 D1187
D1188	**PD/1077**	24346	8307 D1188
D1189	**PD/77**		8308 D1189
D1190	**PD/411-E**	23124	8309 D1190
D1191	**PD/597**		8310 D1191
D1192	**PD/816**		8277 D1192
D1194	**PD/731**		8312 D1194
D1196	**PD/55**	21202	8316 D1196
D1198	**PD/498-A**	23917	8318 D1198
D1200	**PD/503**		8320 D1200
D1201	**PD/102**		8321 D1201
D1202	**PD/1287**	24351 / 24352 / 24568 / 24569	8322 D1202
D1202	**PD/1352**		8400 D1202
D1203	**PD/116**	29042 / 29059 / 29060 / 29061 / 29062 / 29087 / 29105 / 29106 / 29108 / 29109 / 29163 / 29202 / 29278 / 29196	8323 D1203
D1204	**PD/1288**	23984	8324 D1204
D1205	**PD/516**	23669	8325 D1205
D1206	**PD/676**		8326 D1206
D1208	**PD/106**		8328 D1208
D1209	**PD/50**		8329 D1209
D1210	**PD/740**	24336	8330 D1210
D1211	**PD/744**	24337	8331 D1211
D1212	**PD/753**	24338	8332 D1212
D1214	**PD/500**	23879 / 23880	8334 D1214
D1215	**PD/491**	23766	8335 D1215
D1216	**PD/512**	23816	8336 D1216
D1219	**PD/648**	23406 / 23407	8340 D1219
D1221	**PD/405-E**	21674	8342 D1221
D1226	**PD/1451**	23623 / 23264	8345 D1226
D1245	**PD/1345-E**	24133 / 24174	8362 D1245
D1252	**PD/1355**		8370 D1252
D1253	**PD/479**	23022	8371 D1253
D1258	**PD/1080**	24544	8377 D1258
D1259	**PD/1081**	24545	8378 D1259
D1261	**PD/668**	23993	8379 D1261
D1264	**PD/711**	24510 / 24511 / 24512	8381 D1264
D1265	**PD/185**		8382 D1265
D1268	**PD/661**	29200	8383 D1268
D1269	**PD/818**	23974	8385 D1269
D1274	**PD/1082**		8390 D1274
D1275	**PD/715**	24498 / 24499 / 24500	8391 D1275
D1278	**PD/1083**		8394 D1278
D1284	**PD/1487**	25153 / 25154 / 25155	8401 D1284
D1285	**PD/1353**		8402 D1285
D1288	**PD/1025**		8405 D1288
D1293	**PD/1078**		8331 D1293
D1294	**PD/1452**	24170 / 24171	8411 D1294
D1295	**PD/1296**	24501	8614 D1295
D1297	**PD/1341**	24488 / 24489 / 24490	8414 D1297
D1301	**PD/1298**		8417 D1301
D1302	**PD/1299**		8418 D1302

CODE FMSI	FRAS-LE	WVA	FMSI
D1303	**PD/1084**		8419 D1303
D1304	**PD/1085**		8420 D1304
D1306	**PD/1301**	24123 / 24124	8421 D1306
D1307	**PD/1453**	24496	8422 D1307
D1308	**PD/1302**		8423 D1308
D1309	**PD/1303**		8424 D1309
D1310	**PD/129**	29131 / 29156	8425 D1310
D1311	**PD/187**	29187	8426 D1311
D1312	**PD/112**	29090	8427 D1312
D1314	**PD/1332**		8429 D1314
D1316	**PD/662**	29192	8430 D1316
D1317	**PD/663**	29190	8431 D1317
D1318	**PD/664**	29217	8432 D1318
D1321	**PD/598**	23241	8433 D1321
D1322	**PD/1454**	24409 / 24743	8434 D1322
D1323	**PD/149**	29188	8435 D1323
D1326	**PD/300**		8438 D1326
D1327	**PD/1026**	24604 / 24605	8439 D1327
D1328	**PD/1086**		8440 D1328
D1329	**PD/1087**		8441 D1329
D1336	**PD/1088**		8447 D1336
D1342	**PD/1455**	24310 / 24456	8453 D1342
D1344	**PD/1358**		8455 D1344
D1345	**PD/672**		8456 D1345
D1348	**PD/1456**	24483	8213 D1348
D1354	**PD/1320**	24610 / 24611 / 24612	8463 D1354
D1357	**PD/1344**	23881	8466 D1367
D1358	**PD/1333**		8467 D1358
D1369	**PD/172**	29158	8479 D1369
D1370	**PD/173**	29189	8480 D1370
D1375	**PD/1457-B**	24332 / 24333 / 24334	8486 D1375
D1376	**PD/1089**		8487 D1376
D1377	**PD/1090**		8488 D1377
D1381	**PD/1458**	24172 / 24173	8490 D1381
D1394	**PD/1492**		8502 D1394
D1397	**PD/1092**	23966 / 23987 / 23988	8505 D1397
D1398	**PD/1334**		8506 D1398
D1407	**PD/125**	29030 / 29083 / 29113	8515 D1407
D1412	**PD/1459**	24399 / 24875	8525 D1412
D1426	**PD/1460**	24659	8543 D1426
D1427	**PD/1461**	25085	8544 D1427
D1441	**PD/186**	29120	8577 D1441
D1432	**PD/1343**		8549 D1432
D1437	**PD/520**	23581	8555 D1437
D1438	**PD/131**	29126 / 29159	8556 D1438
D1439	**PD/1366**		8575 D1439
D1444	**PD/1351**		8595 D1444
D1445	**PD/1356**		8428 D1445
D1447	**PD/1462**	25187 / 25188 / 25189	8615 D1447
D1452	**PD/1463**	24685	8642 D1452
D1453	**PD/1464**	24452 / 24721	8643 D1453
D1454	**PD/1097**	24283 / 24285 / 24285	8653 D1454
D1455	**PD/1354**		8655 D1455
D1456	**PD/1465**	24563	8656 D1456
D1457	**PD/1379**	20104	8657 D1457
D1460	**PD/1378**	23200 / 23201	8860 D1460
D1461	**PD/1380**	23258 / 23259 / 23262 / 23263	8661 D1461
D1463	**PD/1381**		8663 D1463
D1464	**PD/1382**		7986 D1464

CODE FMSI	FRAS-LE	WVA	FMSI
D1465	**PD/1383**		8664 D1465
D1468	**PD/1102**	25096 / 25097 / 25098	8668 D1468
D1471	**PD/1384**		8671 D1471
D1473	**PD/1466**	24561 / 24562	8672 D1473
D1475	**PD/1385**	23340 / 23341 / 23342	8674 D1475
D1482	**PD/465**	20973 / 20974	8658 D1482
D1487	**PD/122**	29121	8835 D1487
D1489	**PD/1099-B**	24468 / 24469	8689 D1489
D1491	**PD/1386**	23973 / 24403	8691 D1491
D1492	**PD/1331**		
D1498	**PD/1357**		8698 D1498
D1499	**PD/1096**	21978 / 21979 / 21980 / 21981	8254 D1499
D1500	**PD/1387**	23099	8699 D1500
D1502	**PD/1029-A**	24486	8701 D1502
D1506	**PD/1388**		7656 D1506
D1508	**PD/1389**		8715 D1508
D1509	**PD/1390**		8403 D1509
D1511	**PD/1391**		8720 D1511
D1512	**PD/1392**		8721 D1512
D1517	**PD/161**	29142	8726 D1517
D1518	**PD/124**	29088	8727 D1518
D1519	**PD/771**	24529 / 24530	8728 D1519
D1521	**PD/1393**	24342 / 25351	7994 D1521
D1522	**PD/1101**	25034 / 25035 / 25036	8730 D1522
D1523	**PD/1394**	25246	8731 D1523
D1525	**PD/138**	29124 / 29155	8733 D1525
D1527	**PD/170**	29143	8735 D1527
D1528	**PD/1091-A**	24485	8736 D1528
D1533	**PD/1395**	23284	8742 D1533
D1536	**PD/673-B**	23711 / 23712	8745 D1536
D1537	**PD/1396**	24349	8746 D1537
D1540	**PD/1397-B**	24466	8748 D1540
D1541	**PD/346**	23600	8749 D1541
D1542	**PD/1398**	23215 / 24325	8750 D1542
D1543	**PD/1348**		8751 D1543
D1545	**PD/1399**	24739 / 24740	8753 D1545
D1547	**PD/1369**	24606 / 25214	5785 D1547
D1549	**PD/1374**	25158 / 25159	8758 D1549
D1552	**PD/1400**		8762 D1552
D1553	**PD/685**		8763 D1553
D1554	**PD/1401**	25478 / 25479	8754 D1554
D1555	**PD/1028**		8767 D1555
D1555	**PD/1028-B**	24484	8767 D1555
D1556	**PD/1100**		8768 D1556
D1566	**PD/1359**	24597 / 24598 / 24609	8775 D1566
D1562	**PD/1402**		7987 D1562
D1567	**PD/1098**	25209 / 25210	8776 D1567
D1568	**PD/88**		8777 D1568
D1569	**PD/1403**	25410 / 25411 / 25412	8778 D1569
D1571	**PD/669**		8780 D1571
D1572	**PD/689**		8781 D1572
D1574	**PD/1027**	24353 / 24354	8784 D1574
D1578	**PD/1404**		8791 D1578
D1581	**PD/1405-A**	29229 / 29230	8793 D1581
D1582	**PD/501**	23921	8794 D1582
D1584	**PD/1406**	25297 / 25298 / 25299	8208 D1584
D1585	**PD/1407**	25434	8397 D1585
D1589	**PD/1408**	25378 / 25379	8800 D1589
D1590	**PD/1364**	25268 / 25269 / 25270	8801 D1590

CODE FMSI	FRAS-LE	WVA	FMSI
D1592	**PD/1365**		8804 D1592
D1594	**PD/1368**	25337 / 25338 / 25339	8428 D1594
D1596	**PD/1410**	25376 / 25377	8811 D1596
D1601	**PD/633**	24275 / 24411 / 24275	8815 D1601
D1602	**PD/1412**		8816 D1602
D1608	**PD/1413**	25466 / 25467 / 25468	8392 D1608
D1611	**PD/1414**	25449 / 25450	8824 D1611
D1612	**PD/1415**	25458 / 25459 / 24460	8825 D1612
D1615	**PD/1095-A**	24008	8828 D1615
D1616	**PD/509-A**	23705 / 23706	8829 D1616
D1616	**PD/509-B**	23705 / 23706 / 23707	8829 D1616
D1619	**PD/1417**	21436	8831 D1619
D1621	**PD/1335**	24150	8833 D1621
D1622	**PD/1418-A**	29160	8834 D1622
D1623	**PD/1419**	25564	8836 D1623
D1624	**PD/1420**	25540 / 25541	8837 D1624
D1625	**PD/1421**	25552 / 25553 / 25554	8840 D1625
D1627	**PD1422**	24538 / 24914	8844 D1627
D1627	**PD/1377**	24914 / 24538	8844 D1627
D1628	**PD/1423**	24708	8845 D1628
D1631	**PD/1424**	25562	7971 D1631
D1638	**PD/1425**	23619	8865 D1638
D1645	**PD/1427**	25555 / 25556	8873 D1645
D1647	**PD/1428**		8875 D1647
D1649	**PD/1429**	25588 / 25589	8877 D1649
D1650	**PD/1430**	25581 / 25582	8878 D1650
D1651	**PD/1431**	24162	8489 D1651

CODE FMSI	FRAS-LE	WVA	FMSI
D1653	**PD/1432**	25591 / 25592 / 25593	8882 D1653
D1661	**PD/1479**	25321	8888 D1661
D1676	**PD/1434**	25632 / 25633 / 25634	8905 D1676
D1677	**PD/1433**	25149 / 25150 / 25151	8906 D1677
D1696	**PD/1470**	24660	8922 D1696
D1700	**PD/1411**		8924 D1700
D1708	**PD/196**	29174 / 29219 29204 / 29218 / 29226	8931 D1708
D1726	**PD/1488**	25610 / 25611 / 25612	8950 D1726
D1727	**PD/1489**	25599 / 25600 / 25601	8951 D1727
D1760	**PD/1490-B**	25683 / 25684	8989 D1760
D1761	**PD/1491**	25008 / 25010	8990 D1761
D1654	**PD/1494**	25792 / 25793 / 25794	8883 D1654
D1809	**PD/1496**	25733 / 22169 / 22170	9044 D1809
D1281	**PD/1498**	25434	8397 D1281
D1665	**PD/1513**		8893D1665
D1470	**PD/1514**	25034	8667 D1470
D1413	**PD/1497**	24915 / 24916 / 24917	8527 D1413
D1811	**PD/1512**	22165 / 22166 / 22167	946 D1811
D1673	**PD/1468**		892 D1673
D1674	**PD/1469**		893 D1674
D164	**PD/1426**		8867 D164
D1617	**PD/1416**	2361	8742 D1617
D1593	**PD/149**	25348 / 25349 / 2535	886 D1593
D1719	**PD/135**	23961	8825 D1719
D125	**PD/1339**		8368 D125
D1342	**PD/1342**	24310 / 24456	8453 D1342

FRAS-LE®



Brake Pads and Shoes for Motorcycles

Pastillas y Zapatas para Motos

FRAS-LE	Length Largo	Width Ancho	Thick Espesor	Ø Drum Ø Tambor	
LA/801-CP	114.00	22.00	4.50	125.50	Agrale
LH/806-CP	131.00	25.00	3.80	130.00	Honda
LH/807-CP	109.00	24.00	3.80	130.00	Honda
LH/808-CP	153.00	38.00	3.80	141.00	Honda
LH/809-CP	156.00	24.00	3.80	130.00	Honda
LH/810-CP	110.00	30.00	3.80	110.00	Honda
LH/811-CP	155.00	30.00	3.80	130.00	Honda
LH/812-CP	108.00	24.00	3.80	130.00	Honda
LY/822-CP	132.00	27.00	3.80	130.00	Brandy, Yamaha
LY/823-CP	116.00	25.00	4.30	110.80	Yamaha

LA/801 - CP
Freio ø 125.5 x 22.0 mm

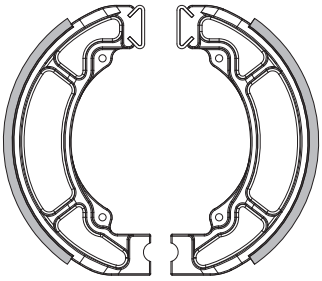

LH/806 - CP
Freio ø 130.0 x 25.0 mm

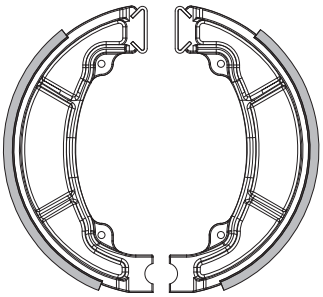

LH/807 - CP
Freio ø 110.0 x 24.0 mm

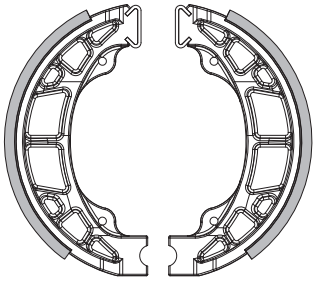

LH/808 - CP
Freio ø 141.0 x 38.0 mm

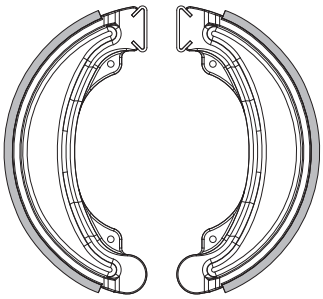

LH/809 - CP
Freio ø 130.0 x 24.0 mm

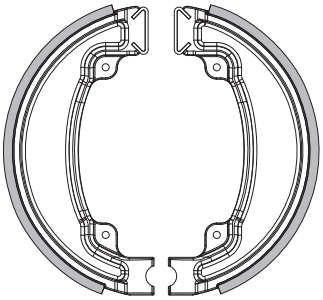

LH/810 - CP
Freio ø 110.0 x 30.0 mm

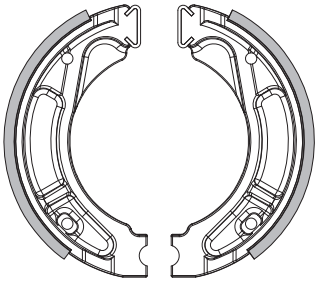

LH/811 - CP
Freio ø 130.0 x 30.0 mm

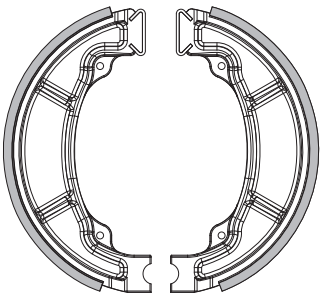

LH/812 - CP
Freio ø 110.0 x 24.0 mm

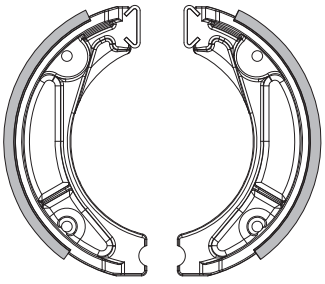

LY/822 - CP
Freio ø 130.0 x 27.0 mm

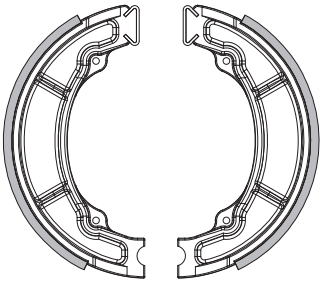

LY/823 - CP
Freio ø 110.8 x 25.0 mm

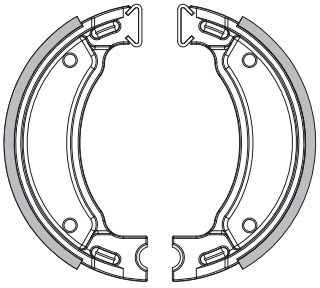

FRAS-LE		Set Composition	Composición del Juego
PD/850	Honda	2 equal pads	2 pastillas igualeses
PD/851	Honda	2 equal pads	2 pastillas igualeses
PD/852	Honda	2 equal pads	2 pastillas igualeses
PD/853	Yamaha	2 equal pads	2 pastillas igualeses
PD/854	Honda	2 equal pads	2 pastillas igualeses
PD/855	Honda	1 pad on right side 1 pad on left side	1 pastilla en el lado derecho 1 pastilla en el lado izquierdo
PD/856	Honda	2 equal pads	2 pastillas iguales
PD/857	Agrale	2 equal pads	2 pastillas iguales
PD/858	Yamaha	2 equal pads	2 pastillas iguales
PD/860	Honda	1 pad on right side 1 pad on left side	1 pastilla en el lado derecho 1 pastilla en el lado izquierdo
PD/861	Honda, Yamaha	1 inner pad 1 outer pad	1 pastilla interna 1 pastilla externa
PD/862	BMW, Honda	1 pad on right side 1 pad on left side	1 pastilla en el lado derecho 1 pastilla en el lado izquierdo
PD/863	BMW, Honda, Yamaha	1 pad on right side 1 pad on left side	1 pastilla en el lado derecho 1 pastilla en el lado izquierdo
PD/864	Honda	1 pad on right side 1 pad on left side	1 pastilla en el lado derecho 1 pastilla en el lado izquierdo
PD/865	Husqvarna, Kawasaki, Suzuki, Triumph, Yamaha	1 inner pad 1 outer pad	1 pastilla interna 1 pastilla externa
PD/866	Maveryc, Motomel, Zanella	2 equal pads	2 pastillas iguales
PD/870	Honda	1 pad on right side 1 pad on left side	1 pastilla en el lado derecho 1 pastilla en el lado izquierdo
PD/871	Honda	2 equal pads	2 pastillas iguales
PD/872	Honda, Sudwon	1 inner pad 1 outer pad	1 pastilla interna 1 pastilla externa
PD/873	Suzuki, Dayun, Agrale, Kasinski, Brandy, Traxx	1 inner pad 1 outer pad	1 pastilla interna 1 pastilla externa
PD/874	Suzuki, Sundwon, Kawasaki, Kasinski, Husqvarna	1 inner pad 1 outer pad	1 pastilla interna 1 pastilla externa
PD/875	Kasinski, Yamaha	2 equal pads	2 pastillas iguales
PD/876	Kawasaki	2 equal pads	2 pastillas iguales
PD/877	Suzuki, Honda	2 equal pads	2 pastillas iguales
PD/878	Suzuki, Kawasaki	1 inner pad 1 outer pad	1 pastilla interna 1 pastilla externa
PD/879	Suzuki, Insa, Mondial, Zanella	2 equal pads	2 pastillas iguales
PD/880	Yamaha	2 equal pads	2 pastillas iguales
PD/881	Sundwon, Yamaha, Kawasaki	2 equal pads	2 pastillas iguales
PD/882	Yamaha, Jianshe	2 equal pads	2 pastillas iguales
PD/883	Yamaha, Honda	1 inner pad 1 outer pad	1 pastilla interna 1 pastilla externa
PD/884	Yamaha, Honda	1 pad on right side 1 pad on left side	1 pastilla en el lado derecho 1 pastilla en el lado izquierdo
PD/886	Yamaha	2 equal pads	2 pastillas iguales
PD/887	Sundwon, Yamaha	2 equal pads	2 pastillas iguales
PD/888	Suzuki, Kawasaki	1 pad on right side 1 pad on left side	1 pastilla en el lado derecho 1 pastilla en el lado izquierdo
PD/889	Honda	1 pad on right side 1 pad on left side	1 pastilla en el lado derecho 1 pastilla en el lado izquierdo
PD/890	Kawasaki	2 equal pads	2 pastillas iguales
PD/891	Yamaha	1 pad on right side 1 pad on left side	1 pastilla en el lado derecho 1 pastilla en el lado izquierdo

PD/850

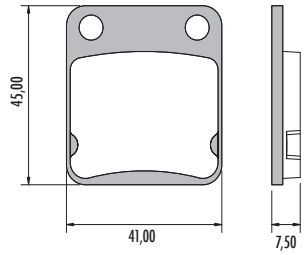

PD/851

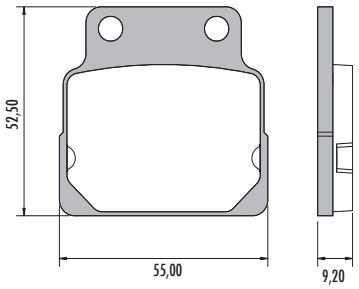

PD/852

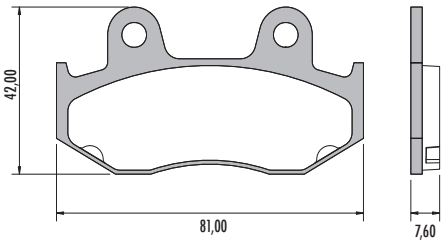

PD/853

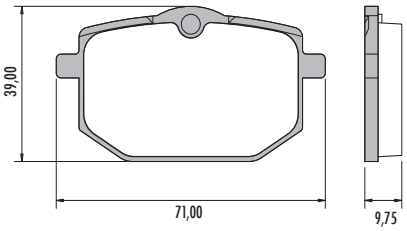

PD/854

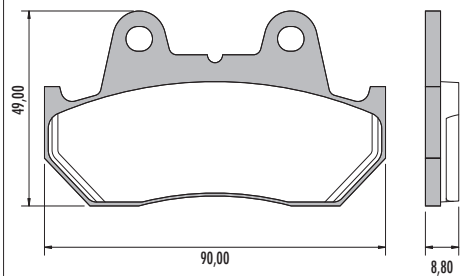

PD/855

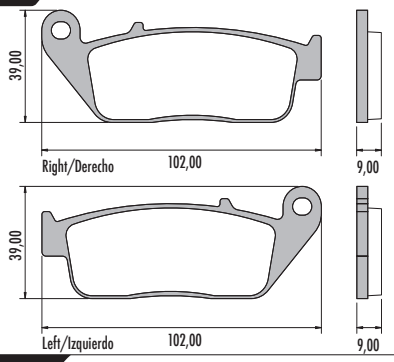

PD/856

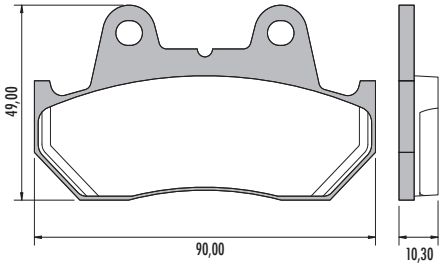

PD/857

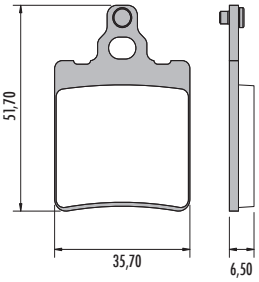

PD/858

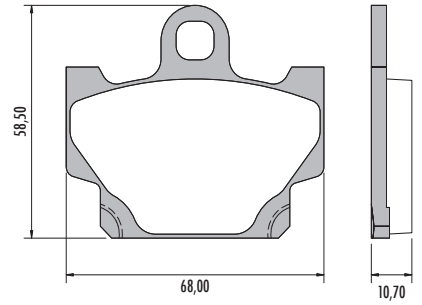

PD/860

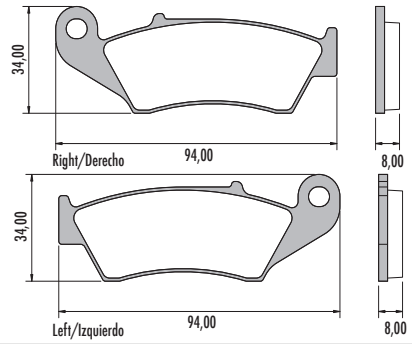

PD/861

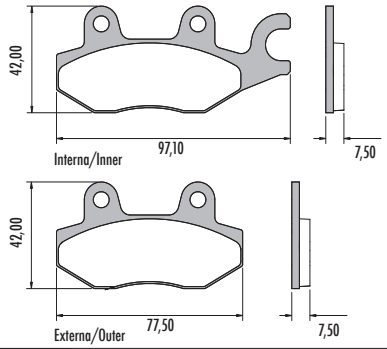

PD/862

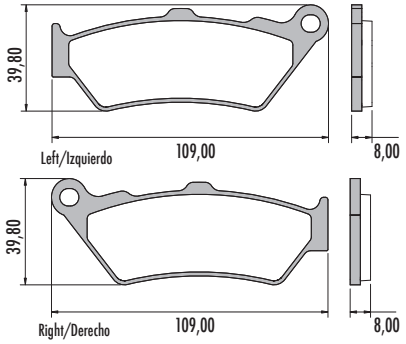

PD/863

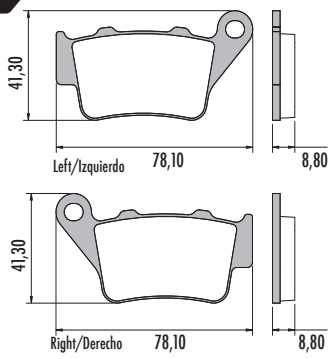

PD/864

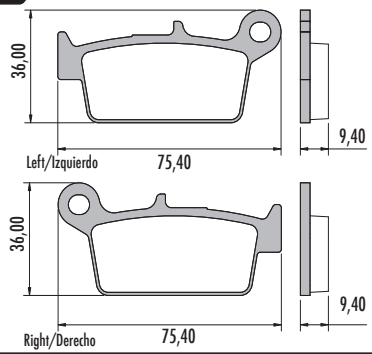

PD/865

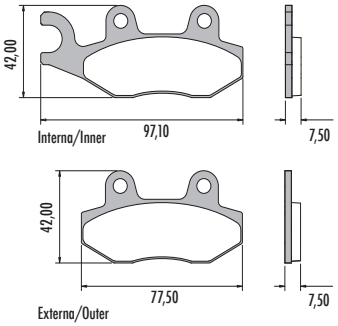

PD/866

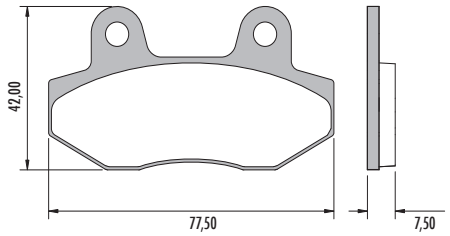

PD/870

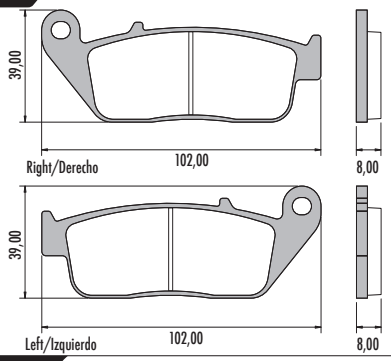

PD/871

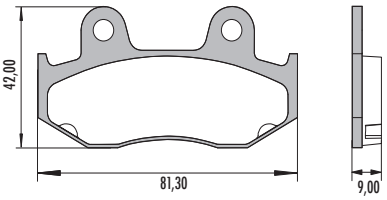

PD/872

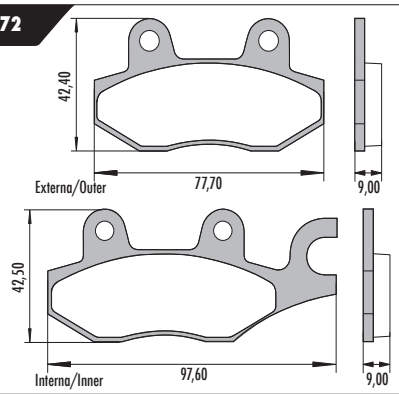

PD/873

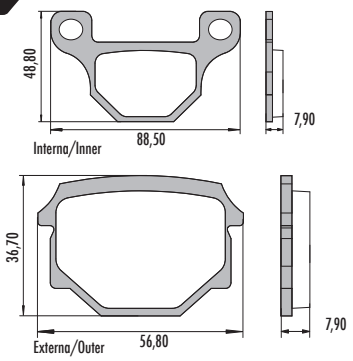

PD/874

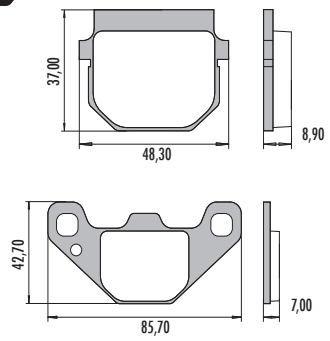

PD/875

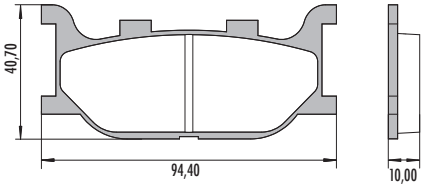

PD/876

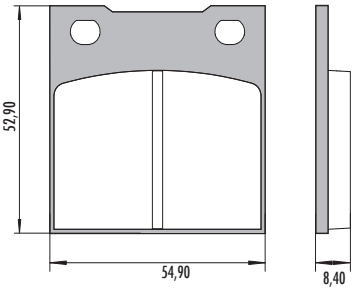

PD/877

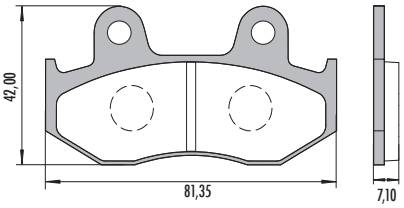

PD/878

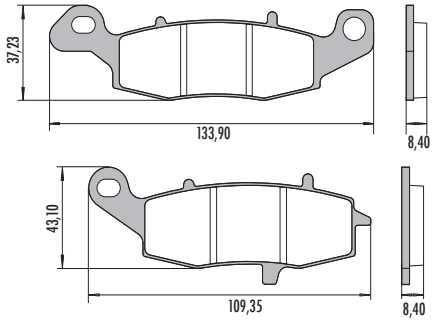

PD/879

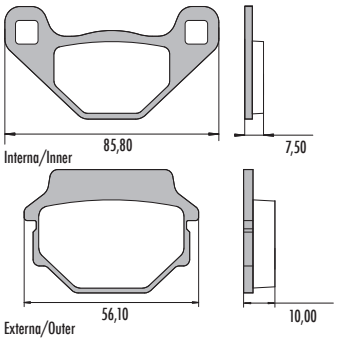

PD/880

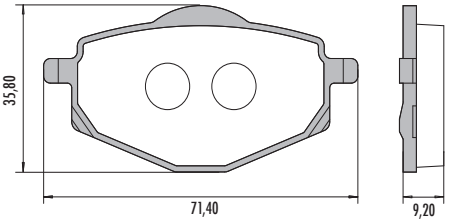

PD/881

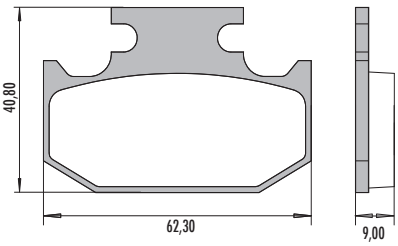

PD/882

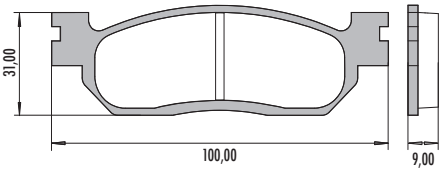

PD/883

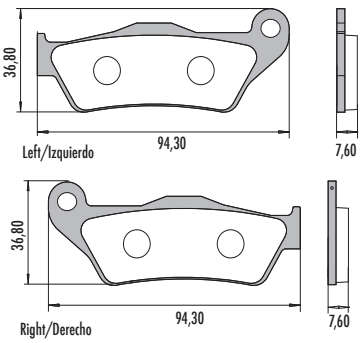

PD/884

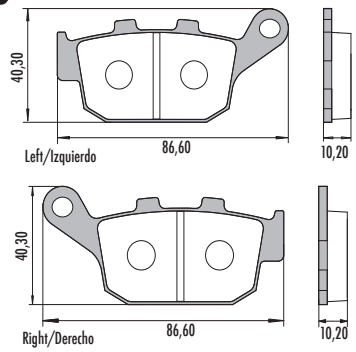

PD/886

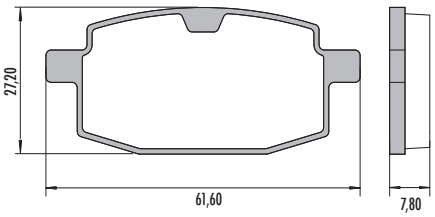

PD/887

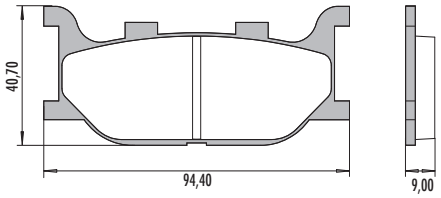

PD/888

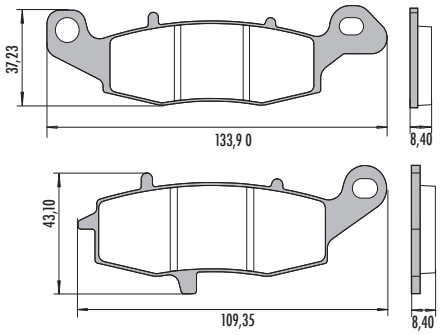

PD/891

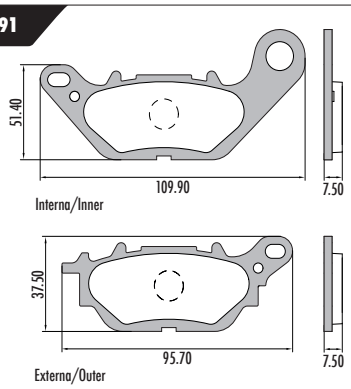

Notes:

FRAS-LE®



Clutch Facings

Revestimientos de Embrague

Dimensions/Dimensiones			FRAS-LE Reference Referencia	Groove Ranuras	Drilling Diagram Diagrama de Perforación
					
127.00	69.90	4.75	RT/686		30
151.40	91.70	3.17	F/502		
155.00	115.00	3.05	651-RA		02
155.00	115.00	3.95	654-RA		02
159.00	97.5	3.5	F/1023		
160.00	110.00	3.05	655-B-RA	24	02
160.00	110.00	3.20	655		
160.00	110.00	3.20	RA/722		
160.00	112.00	3.20	RA/808	24	20
165.00	115.00	3.25	RA/745		20
165.00	89.00	5.00	RT/750		31
165.10	88.90	4.80	RT/690		31
170.00	110.00	3.30	RA/786	12	01
170.00	115.00	3.30	RA/807		20
170.00	120.00	3.00	612-RA		02
170.00	120.00	3.00	RA/715		02
178.00	101.00	4.75	RT/694		37
179.90	127.60	4.00	F/1046	08	01
180.00	124.00	3.20	F/1074		02
180.00	124.00	3.20	743-B		02
180.00	124.00	3.20	743-S/F		
180.00	124.00	3.40	774-RA-D		19
180.00	124.00	3.40	774-RA-I		01
180.00	124.00	3.40	774-S/F		
180.00	124.00	3.50	RA/734		19
180.00	124.00	3.80	RA/736		19
180.00	124.00	3.80	771		
180.00	124.00	3.85	RA/800		19
180.00	126.50	3.20	RA/922		01
180.00	126.50	3.50	RA/762		02
180.00	126.50	3.50	RA/782		20
180.00	126.50	3.50	RA/834		24
180.00	127.00	3.25	RA/857	08	01
180.00	127.00	3.5.00	F/1035	08	01
180.00	134.00	3.15	RA/765	24	01
180.00	134.00	3.40	RA/824	24	01
181.50	127.00	2.85	RA/928	08	02
181.50	127.00	3.20	RA/744		02
181.50	127.00	3.45	RA/758		20
181.50	127.00	3.45	RA/759		08
181.50	134.00	3.10	RA/799	24	01
181.50	134.00	3.50	RA/783	24	01
190.00	132.00	3.00	RA/929	08	01
190.00	132.00	3.15	RA/897		01
190.00	132.00	3.50	785	24	01
190.00	134.00	4	F/1030	08	01
190.00	134.00	3.20	RA/739-RA		01
190.00	134.00	3.20	RA/739-RA-A		02
190.00	134.00	3.25	RA/793	08	01
190.00	134.00	3.5	F/1034	08	01
190.00	134.00	3.50	RA/739-S/F		
190.00	134.00	3.50	RA/739		01
190.00	134.00	3.60	RA/746		01
190.00	134.00	3.70	RA/770		01
190.00	135.00	3.25	RA/890		02
200.00	130.00	3.25	RA/898	08	01
200.00	130.00	3.25	RA/898		01
200.00	130.00	3.30	F/1028	08	01

Dimensions/Dimensiones			FRAS-LE Reference Referencia	Groove Ranuras	Drilling Diagram Diagrama de Perforación
					
200.00	130.00	3.30	**736**		
200.00	130.00	3.30	**736-V**		02
200.00	130.00	3.30	**736-W-RA**		01
200.00	130.00	3.30	**RA/738**	08	01
200.00	130.00	3.30	**RA/763**	08	02
200.00	130.00	3.50	**F/1029**	08	01
200.00	130.00	3.50	**F/953**	08	20
200.00	130.00	3.50	**750**		
200.00	130.00	3.50	**736-X-S/F**		
200.00	130.00	3.50	**RA/737**	08	01
200.00	130.00	3.60	**F/946**	08	01
200.00	130.00	4.00	**736-XX-S/F**		
200.00	134.00	3.05	**RA/805**	08	01
200.00	134.00	3.45	**RA/785**	08	01
200.00	134.00	3.5	**F/1031**	08	01
200.00	134.00	3.50	**RA/780**		01
200.00	136.00	3.20	**RA/781**	24	02
200.00	136.00	3.45	**740-RA**		01
200.00	137.00	3	**RA/921**	08	63
200.00	137.00	3.00	**RA/892**		02
200.00	137.00	3.25	**RA/893**		01
200.00	137.00	3.30	**RA/891**		02
200.00	137.00	3.45	**F/806**	08	
200.00	137.00	3.45	**RA/843**	08	63
200.00	140.00	3.50	**RA/865**		01
200.00	145.00	3.50	**RA/769**		01
203.00	127.00	4.75	**RT/692**		37
203.20	152.40	3.43	**RA/719**		38
203.70	131.00	3.50	**F/1064**	24	01
203.70	131.00	3.50	**RA/749**		01
205.00	134.00	3	**F/947**	12	02
205.00	134.00	3.00	**RA/856**	12	02
205.00	134.00	3.50	**RA/806**	12	01
209.00	144.00	3.5	**F/1038**		01
209.00	144.00	3.50	**RA/761**		01
209.00	144.00	3.50	**RA/815**		01
210.00	134.00	3.2	**F/1032**		01
210.00	134.00	3.5	**F/1109**		01
210.00	134.00	3.50	**RA/747**		01
210.00	134.00	3.50	**RA/756**		01
210.00	155.00	3.30	**RA/796**	08	01
212.00	140.00	3.50	**F/962**	24	
214.00	146.00	3.45	**F/1036**	12	01
214.00	146.00	3.45	**RA/855**	12	01
215.00	145.00	3.05	**8016-RA-T**		07
215.00	145.00	3.25	**8016**	24	
215.00	145.00	3.25	**8016-RA**		07
215.00	145.00	3.25	**8016-S/F**		
215.00	145.00	3.40	**RA/779**	24	01
215.00	145.00	3.50	**8016-X-S/F**		
215.00	145.00	4.00	**8016-XX-S/F**		
215.00	150.00	3.45	**RA/889**		19
215.00	154.00	3.50	**F/1065**	08	01
215.10	144.90	3.45	**8026-B**		01
215.90	130.20	3.60	**884**		01
216.00	144.00	3.35	**RA/794**		01
216.00	144.00	3.45	**F/648**	08	
216.00	145.00	3.30	**F/1039**	08	20

Dimensions/Dimensiones			FRAS-LE Reference Referencia	Groove Ranuras	Drilling Diagram Diagrama de Perforación
					
216.00	145.00	3.30	**RA/777**		20
216.00	146.00	3.45	**RA/804**	12	01
216.00	150.00	3.50	**RA/773**		01
216.00	150.00	3.80	**RA/772**		01
216.70	145.27	3.17	**8025**	24	
219.00	155.00	3.35	**RA/911**	12	01
220.00	155.00	3.50	**RA/863**		01
220.00	160.50	3.45	**RA/923**	08	01
222.25	152.40	4.75	**RT/710**		43
224.00	150.00	3.50	**F/1050**	12	38
225.00	150.00	3.40	**RA/809**	12	01
225.00	150.00	3.40	**RA/926**	12	01
225.00	150.00	3.50	**F/1037**	12	01
225.00	150.00	3.50	**8013**	12	
225.00	150.00	3.50	**RA/809-S/F**		
225.00	150.00	3.50	**F/1051**	12	01
225.00	150.00	3.50	**RA/854**	12	01
225.00	150.00	3.50	**RA/885**		01
227.00	155.00	3.00	**RA/912**		19
227.00	155.00	3.00	**RA/910**		01
228.00	150.00	3.35	**RA/797-S/F**		
228.00	150.00	3.35	**F/1052**	12	01
228.00	150.00	3.35	**RA/797**	12	01
228.00	150.00	3.50	**F/1041**	12	01
228.00	150.00	3.90	**F/1040**	12	01
228.00	150.00	4.30	**RA/709**		72
228.00	155.00	3.30	**RA/899**		01
228.00	155.00	3.35	**RA/792**	12	01
228.60	151.00	5.00	**RT/731**		43
230.00	155.00	3.55	**RA/760-S/F**		
230.00	155.00	3.55	**RA/760**		01
230.00	165.00	3.50	**RA/847**	24	01
231.77	155.57	3.50	**RA/707**		04
231.78	155.58	3.40	**909**	24	
231.80	155.60	3.50	**RA/707-S/F**		
232.00	157.00	3.10	**F/1053**	24	01
232.00	157.00	3.50	**F/1054**	24	01
235.00	152.4	3.2	**F/1075**	24	03
235.00	152.4	3.5	**F/971**	24	04
235.00	152.40	3.20	**993-A**		72
235.00	152.40	3.20	**993-S/F**		
235.00	152.40	3.45	**993-A-RA**		72
235.00	152.40	3.50	**993-X-S/F**		
235.00	152.40	4.00	**993-XX-S/F**		
235.00	175.50	5.60	**F/1106**		70
240.00	150.00	3.35	**F/1043**	24	01
240.00	150.00	3.35	**F/807**	24	01
240.00	150.00	3.60	**9040**	24	01
240.00	155.00	3.50	**RA/931**	12	01
240.00	155.00	3.50	**RA/858**	12	01
240.00	155.00	4.20	**RA/811**	12	01
240.00	155.00	4.20	**RA/827**	12	01
240.00	159.60	3.50	**RA/925**	24	01
240.00	159.60	3.55	**F/959**	24	
240.00	180.00	3.40	**RA/862**	24	01
241.30	152.40	3.17	**990**	21	
241.30	152.40	3.40	**9012-S/F**		
241.50	172.60	3.20	**RA/924**	24	01

Dimensions/Dimensiones			FRAS-LE Reference Referencia	Groove Ranuras	Drilling Diagram Diagrama de Perforación
					
250.00	165.00	3.50	**RC/716-S/F**		
250.00	165.00	3.50	**RC/716**		11
250.00	165.00	4.20	**RC/913**		05
250.80	155.60	3.20	**RT/726**		16
252.00	171.50	3.50	**F/1066**	24	72
252.00	184.5	3.6	**F/1042**	12	01
252.00	184.50	3.60	**RA/795**	12	01
254.00	152.40	3.20	**1057-B**		04
254.00	152.40	3.20	**1057-RA-S/F**		
254.00	152.40	3.40	**1056**	27	
254.00	152.40	3.45	**1057-B (3.45)**		04
254.00	152.40	3.60	**1057-S/F**		
254.00	152.40	3.60	**1057-F**		04
254.00	171.00	3.00	**F/1061**	24	72
258.00	175.00	3.65	**RA/802**	12	01
258.00	175.00	3.80	**RA/801**	12	01
260.00	165.10	3.20	**1093**		
260.00	172.00	3.45	**RC/914**		38
261.00	170.00	3.50	**F/961**	24	
266.7	165.1	3.2	**F/1078**		05
266.70	165.10	3.43	**1095-S/F**		
266.70	165.10	3.43	**1095**		05
273.00	177.80	3.60	**1064**	24	
276.00	175.00	3.60	**1062**		
276.00	175.00	4.00	**RC/920**	10	61
277.00	173.50	3.60	**RA/810**	12	05
279.00	171.45	3.7	**RC/930**	24	61
279.4	171.45	3.95	**11010**	24	03
279.4	198.42	3.45	**11014**	24	01
280.00	165.00	3.40	**F/1082**	30	05
280.00	165.00	3.40	**1166-A**	30	05
280.00	165.00	3.40	**1166-S/F**	30	
280.00	165.00	3.50	**RC/710-S/F**		
280.00	165.00	3.50	**RC/710**		08
280.00	165.00	3.50	**RC/790**		44
280.00	165.00	3.50	**F/1129**	30	05
280.00	165.00	3.56	**1142-E**	30	05
280.00	165.00	3.60	**RC/791-S/F**		
280.00	165.00	3.60	**RC/791**		05
280.00	165.00	3.80	**1185**	30	
280.00	165.00	3.90	**RT/711**	30	05
280.00	165.00	4.00	**1166-X-S/F**	30	
280.00	165.00	4.00	**1166-A-X**	30	05
280.00	165.00	4.00	**RC/775**		05
280.00	165.00	4.20	**RC/774**		05
280.00	165.00	4.35	**RC/896**		01
280.00	199.00	3.50	**F/1055**	24	38
290.00	186.00	4.00	**F/1062**	08	72
290.00	187.00	4.00	**F/1063**	08	67
294.00	165.00	3.80	**RT/760**		05
294.00	213.00	3.20	**F/1067**	24	05
295.00	165.00	4.20	**RT/757**		47
295.00	170.00	3.80	**F/568**		
295.00	198.00	3.90	**F/1068**	08	72
297.00	171.00	3.60	**11004S**	30	05
297.00	171.00	3.60	**F/1080**	30	05
298.00	179.00	3.50	**F/1069**	10	05
300.00	175.00	3.70	**RC/776**		05

Dimensions/Dimensiones			FRAS-LE Reference Referencia	Groove Ranuras	Drilling Diagram Diagrama de Perforación
					
300.00	175.00	4.00	**RC/798**		05
300.00	180.00	3.90	**RC/819**	12	05
300.00	190.00	3.90	**RC/864**		05
300.00	190.00	4.00	**F/798**	24	
300.00	190.00	4.00	**F/1125**	24	72
300.00	190.00	4.10	**F/1056**	24	05
300.00	230.00	3.45	**RA/842**	12	41
300.00	230.00	3.50	**RA/846**	12	65
301.00	190.00	3.70	**F/1057**	24	03
301.00	213.00	3.50	**F/1071**	10	05
301.5	171.00	3.60	**F/1079**	30	05
301.50	171.00	3.56	**11004**	30	05
301.65	196.85	4.00	**RT/730-S/F**		
302.00	171.00	3.56	**RC/740-S/F**		
302.00	171.00	3.56	**RC/740**	30	05
302.00	171.00	4.00	**RC/740-X**	30	05
302.00	171.00	4.00	**RT/738**	30	05
303.00	174.00	3.90	**RC/833**	24	21
304.00	190.00	4.00	**F/960**	24	
304.80	180.00	4.10	**RT/759**		05
304.80	180.00	4.10	**RT/840**		05
310.00	175.00	3.80	**RC/714-S/F**	24	
310.00	175.00	3.80	**RC/714**	24	08
310.00	175.00	4.08	**RT/713**		44
310.00	175.00	4.40	**1279**	20	
310.00	175.00	4.40	**RC/717-S/F**	20	
310.00	175.00	4.40	**RC/717**	20	05
310.00	175.00	4.70	**F/1111**	24	
310.00	193.00	4.00	**RC/901**		56
310.00	213.00	3.50	**F/1070**	10	05
311.00	190.00	4.40	**RC/713**		05
325.00	190.50	3.40	**RC/848**	20	13
325.00	190.50	4.30	**RC/768**		05
325.00	191.00	3.90	**RC/902**		05
325.00	191.00	4.30	**RC/860**		06
325.00	210.00	4.00	**RC/887**		13
325.00	210.00	4.00	**F/808**	24	
327.00	184.00	4.00	**RC/970**	27	04
327.00	184.10	3.80	**1236-C**	27	06
327.00	184.10	3.95	**1236-S/F**	27	
327.00	184.10	3.95	**1236**	27	37
327.00	184.10	4.20	**RC/754**	27	06
327.00	184.2	3.6	**1233-C**	27	54
327.00	184.2	3.6	**F/1083**	27	54
327.00	185.00	4.00	**F/1058**	27	54
327.00	192.00	3.90	**RC/817**		58
330.00	184.00	3.50	**RC/712-S/F**		
330.00	184.00	3.50	**RC/712**		10
330.00	184.00	3.80	**RC/712 (3.8)**		10
330.00	184.00	4.00	**RC/787**		10
330.00	184.00	4.40	**RC/771**		58
330.00	195.00	3.60	**RC/743**		56
330.00	195.00	4.10	**RT/728**		05
330.00	195.00	4.30	**RC/812**		05
330.00	200.00	4.10	**RT/761**		05
330.00	200.00	4.30	**RT/756**		05
330.00	210.00	4.00	**RC/852**	12	61
345.00	195.00	4.30	**RC/814**		05

Dimensions/Dimensiones			FRAS-LE Reference Referencia	Groove Ranuras	Drilling Diagram Diagrama de Perforación
					
346.00	220.00	4.40	**RC/825**	24	60
349.25	186.54	3.85	**RC/818**	06	18
349.25	186.65	4.80	**1312**	06	18
349.25	212.70	4.00	**RC/755**		05
349.25	212.70	4.30	**RC/813**		05
349.30	187.30	4.45	**1367**		18
349.60	192.70	4.50	**RC/828**	24	18
350.00	195.00	3.50	**F/571**	16	
350.00	195.00	3.50	**RC/748**		13
350.00	195.00	3.60	**RC/918**	16	18
350.00	195.00	3.60	**RC/742**		56
350.00	195.00	3.90	**RC/919**	16	18
350.00	195.00	4.00	**RC/711-S/F**		
350.00	195.00	4.00	**RC/711**		09
350.00	195.00	4.00	**RC/788**		13
350.00	195.00	4.25	**RC/816**		13
350.00	195.00	4.50	**F/1115**	16	
350.00	212.00	4.30	**RC/894**		05
350.00	215.00	4.40	**RT/758**		05
350.00	220.00	4.50	**F/1059-SF**	24	05
350.00	220.00	5.00	**F/809**	24	
350.00	222.00	4.50	**F/1059**	24	66
351.00	213.00	4.40	**RC/832**	24	58
352.40	203.20	4.00	**RC/764**		06
362.00	194.00	3.50	**RC/903**		56
362.00	236.50	4.20	**RC/839**	24	05
362.00	236.50	4.20	**RC/844**	24	13
362.00	237.50	4.20	**F/1047**	18	13
362.00	237.50	4.20	**F/1048**	24	05
362.00	238.00	4.00	**F/1060**	24	05
362.50	236.50	4.40	**RC/904**		22
363.00	236.50	3.50	**RC/850**	18	13
363.00	236.50	4.50	**RC/821**	18	22
363.00	236.50	4.50	**RC/851**	18	61
365.00	195.00	4.10	**RC/820**	24	13
365.00	195.00	4.50	**F/737**	24	15
365.00	220.00	3.50	**RC/905**		14
365.00	220.00	4.50	**F/950**	24	05
365.00	220.00	4.50	**RC/838**	24	62
365.00	220.00	4.50	**RC/803**	24	15
365.00	220.00	4.50	**RC/836**	24	05
365.00	220.00	4.80	**RC/837**	24	05
365.00	220.00	4.90	**RC/784**	24	60
365.00	220.00	5.00	**RC/849**	24	62
365.00	235.00	4.80	**F/963**	24	
375.00	230.00	4.60	**RC/778**		18
380.00	200.00	3.50	**RC/933**	16	13
380.00	200.00	3.50	**F/570**	16	
380.00	200.00	3.50	**RC/709**		13
380.00	200.00	4.00	**RC/706**		12
380.00	200.00	4.00	**RC/709-X**		13
380.00	200.00	4.00	**RC/706-S/F**		
380.00	200.00	4.10	**RC/932**	16	13
380.00	200.00	4.10	**RC/718-S/F**		
380.00	200.00	4.10	**RC/718**		15
380.00	200.00	4.50	**RC/934**	16	13
380.00	200.00	5.00	**RC/935**	16	13
380.00	220.00	3.20	**F/810**	24	

Dimensions/Dimensiones			FRAS-LE Reference Referencia	Groove Ranuras	Drilling Diagram Diagrama de Perforación
					
380.00	220.00	3.40	**RC/906**		56
380.00	240.00	5.00	**F/811**	24	
380.00	250.00	3.50	**RC/751**	18	13
380.00	250.00	4.00	**RC/751-E**	18	17
387.35	225.43	4.75	**1553**	06	18
395.00	240.00	3.50	**F/973**	24	13
395.00	240.00	3.50	**F/1049**	24	13
395.00	240.00	3.50	**RC/859**	24	13
395.00	240.00	3.50	**RC/831**	24	13
395.00	240.00	3.60	**RC/916**	24	14
395.00	240.00	3.60	**RC/907**		14
395.00	240.00	4.30	**RC/908**		68
395.00	240.00	4.30	**RC/915**		70
395.00	240.00	4.50	**RC/868**		68
395.00	240.00	4.50	**RC/835**	24	61
395.00	240.00	4.50	**RC/853**	24	64
395.00	270.00	3.50	**RC/830**	24	13
400.00	220.00	3.50	**RC/829**	24	13
400.00	250.00	3.50	**RC/822**	18	13
406.00	250.00	4.70	**F/964**	24	
410.00	250.00	5.00	**F/812**	24	
419.10	219.00	4.14	**1628-S/F**		
420.00	220.00	3.50	**RC/752-S/F**		
420.00	220.00	3.50	**RC/752**		14
420.00	220.00	3.80	**RC/752 (3.8)**		14
420.00	220.00	3.85	**RC/726-S/F**		
420.00	220.00	3.85	**F/569 S/F**		
420.00	220.00	3.85	**F/569**	18	
420.00	220.00	3.85	**RC/726**	12	12
420.00	220.00	4.00	**RC/752 (4.0)**		14
420.00	220.00	4.70	**RC/753**	12	14
420.00	240.00	3.50	**RC/927**	12	14
420.00	250.00	3.20	**F/813**	24	
430.00	240.00	3.20	**RC/917**	12	14
430.00	240.00	3.50	**F/1033**	12	14
430.00	240.00	3.50	**RC/767**	12	14
430.00	240.00	4.00	**F/1110**	12	14
430.00	240.00	4.00	**F/1104 S/F**		
430.00	240.00	4.00	**RC/789 S/F**	12	
430.00	240.00	4.00	**RC/789**	12	14
430.00	240.00	4.30	**RC/861**	12	61
430.00	240.00	4.30	**RC/823**	12	23
430.00	240.00	4.50	**F/1112**	12	
430.00	240.00	4.90	**RC/826**	18	23
430.00	250.00	5.00	**F/814**	24	
430.00	260.00	3.80	**RC/841**	18	14
430.00	260.00	4.50	**RC/888**		69

Remarks/*Notas*:

Position of the holes may be found on Drilling Diagram.
La posición de los agujeros puede ser encontrada en las páginas del Diagrama de Perforación.

Blank "Drilling Diagram" column: item is supplied undrilled only.
Columna "Diagrama de Perforación" en blanco: el ítem es suministrado sin perforar.

Dimensions/Dimensiones			Groove Ranuras	Drilling Diagram Diagrama de Perforación
				
180.00	127.00	3.10	08	01
180.00	127.00	3.25	08	01
180.00	132.00	3.00	08	01
181.50	134.00	3.20	24	01
190.00	134.00	2.95	08	01
190.00	134.00	3.15	08	01
190.00	134.00	3.45	08	20
200.00	134.00	3.20	08	01
200.00	134.00	3.70	08	20
200.00	137.00	3.25	08	01
205.00	134.00	3.37	12	01
210.00	134.00	3.53		01
214.00	150.00	3.45	12	01
215.00	150.00	3.75	08	20
216.00	144.00	3.05	08	01
228.00	150.00	3.25	12	01
228.00	155.00	3.15	12	01
228.00	155.00	3.25	12	01
236.00	150.00	3.50	12	01
236.00	165.00	3.35	12	01
240.00	180.00	3.50	24	01
258.00	172.00	3.65	12	01
300.00	190.00	3.90	24	21
420.00	220.00	5.00	12	14

Remarks/*Notas*:

Position of the holes may be found on Drilling Diagram.
La posición de los agujeros puede ser encontrada en las páginas del Diagrama de Perforación.

Blank "Drilling Diagram" column: item is supplied undrilled only.
Columna "Diagrama de Perforación" en blanco: el ítem es suministrado sin perforar.

01 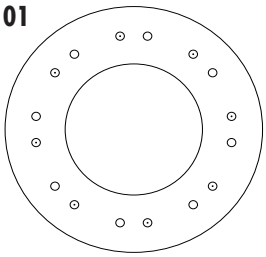	02 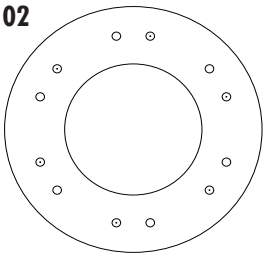	03 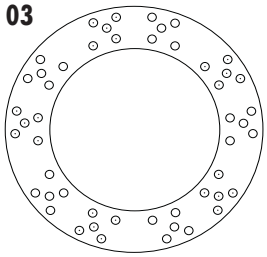	04 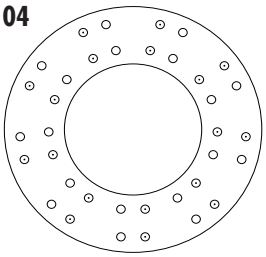	05 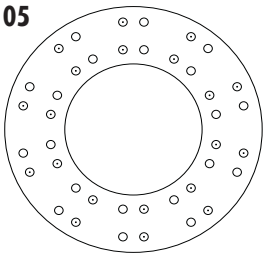
06 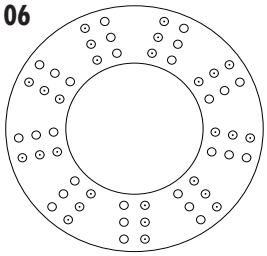	07 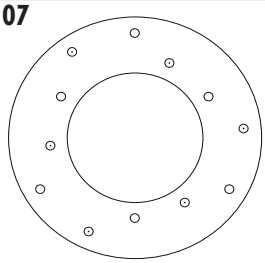	08 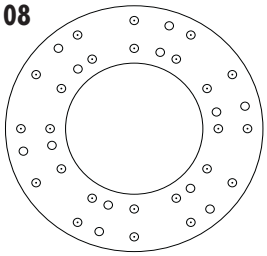	09 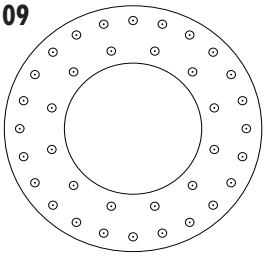	10 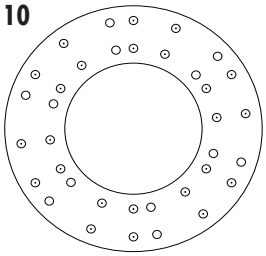
11 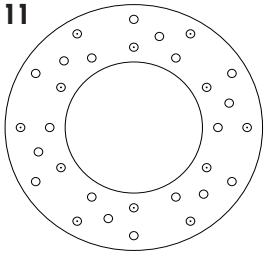	12 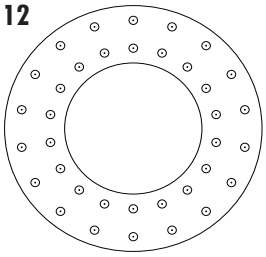	13 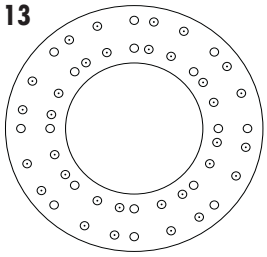	14 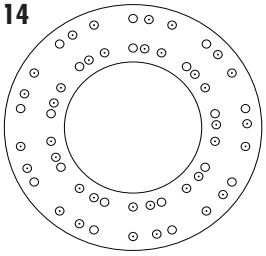	15 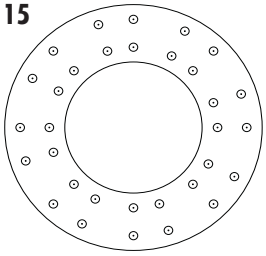
16 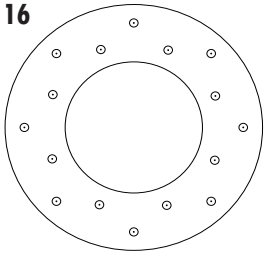	17 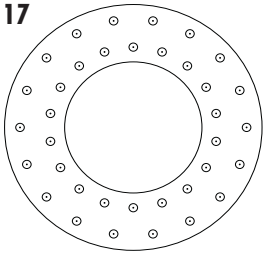	18 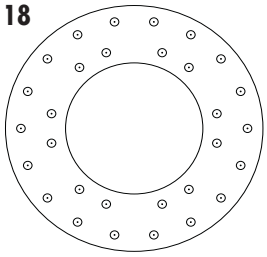	19 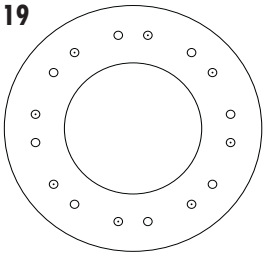	20 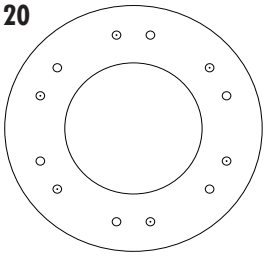
21 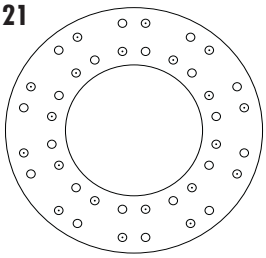	22 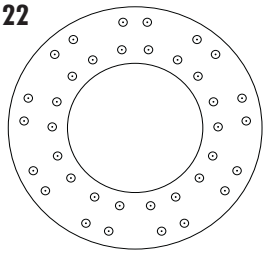	23 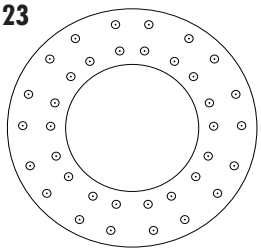	24 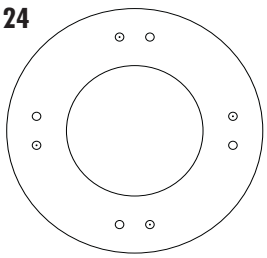	30 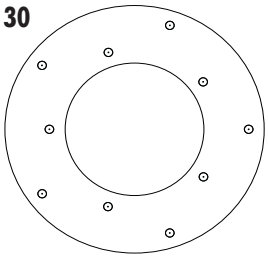
31 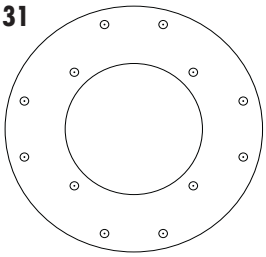	33 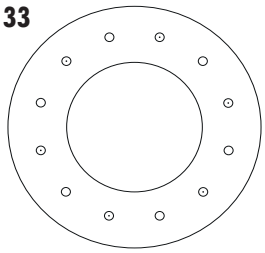	37 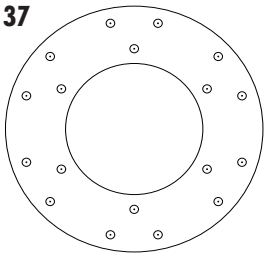	38 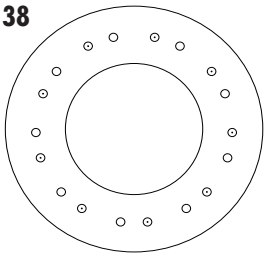	41 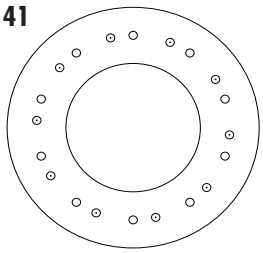
43 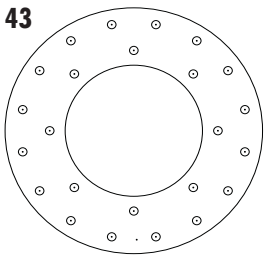	44 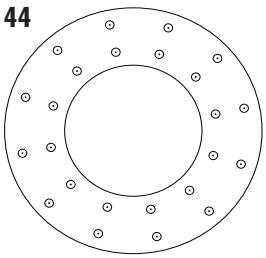	47 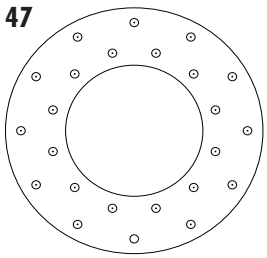	54 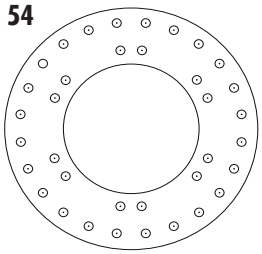	56 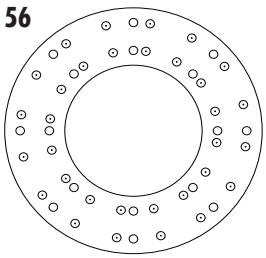

58 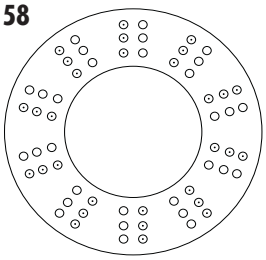	60 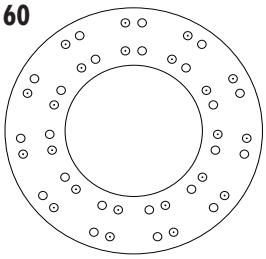	61 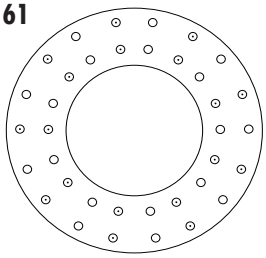	62 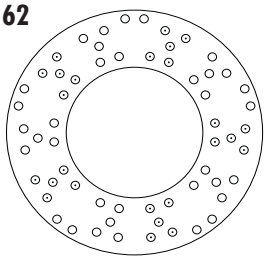	63 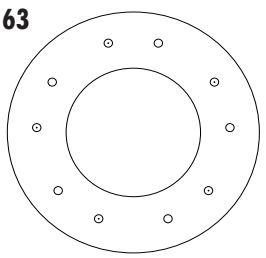
64 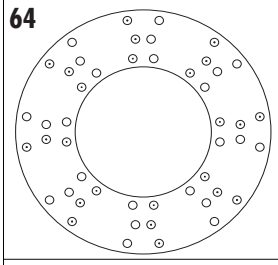	65 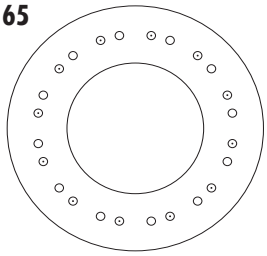	66 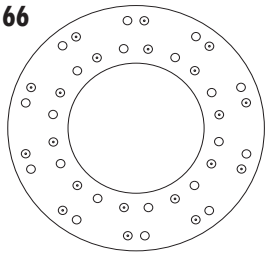	67 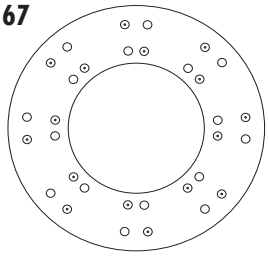	68 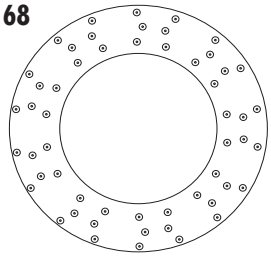
69 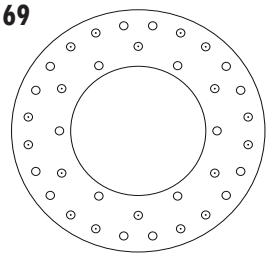	70 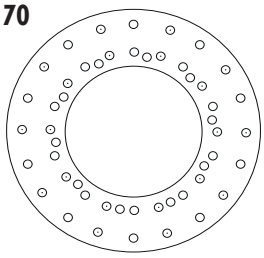	71 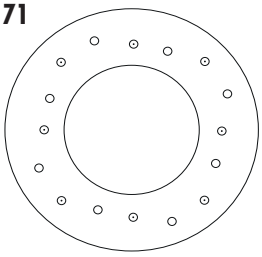	72 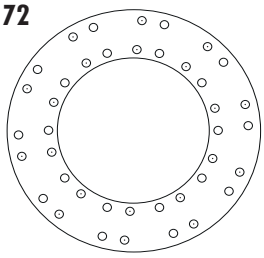	

Notes:

FRAS-LE®



Tractors Brake Linings

Guarniciones para Frenos de Tractores

FRAS-LE	LonaFlex					#		O.E. #
F/83	L-542	131.70	92.00	6.50	356.00	06	FIAT ALLIS	79011448-79007847
F/83-A		131.70	92.00	6.50	356.00	06	FIAT ALLIS	75222402
F-421		108.00	100.00	9.00	385.00	06	KOMATSU	13080952222
F/423		217.50	100.00	9.00	370.00	12	KOMATSU	1353311331
F/424		231.70	150.00	9.50	450.00	15	KOMATSU	1703312132
F/425		283.10	150.00	9.50	450.00	23	KOMATSU	1703312142
F-434		168.10	90.00	6.00	353.00	10	FIAT ALLIS	4970722
F/497		212.80	68.80	9.50	447.00	08	CATERPILLAR	7S9674
F/508		212.50	90.00	6.00	341.00	10	FIAT ALLIS	790111420
F/509		221.00	47.00	9.00	370.00	07	KOMATSU	14433B5240
F/530		221.00	47.00	9.00	370.00	06	KOMATSU	14433B5250
F/531		161.40	38.00	6.30	330.00	03	CATERPILLAR	4V2244
F/532		234.90	19.00	6.30	330.00	04	CATERPILLAR	4V2245
F/576		205.30	60.00	6.00	341.00	10	FIAT ALLIS	75323135
F/645		181.90	88.90	6.40	425.00	08	CATERPILLAR	9P1893
F/657		12 X F/83-A						
F/658		10 X F/421						
F/659		5 X F/423						
F/660		12 X F/434						
F/661		6 X F/531 8 X F/532						
F/662		10 X F/556						
F/663		10 X F/576						
F/664		5 X TR/398						
F/665		4 X F/529 6 X F/530						
F/666		12 X F/497						
F/667		4 X F/424 6 X F/425						
F/828		221.00	47.00	9.00	370.00	09		
TR/311	L-546	357.60	50.80	6.40	356.00	12	MASSEY FERGUNSON	487497M1
TR/312	L-1043	266.00 / 356.70	60.00	7.00	349.00	12/16	OTTO DEUTZ	9005091ED145229 9005088ED145229
TR/313	L-576	232.9	44.50	4.80	232.00	8	VALMET	583330
TR/315	L-596	298.30	50.80	4.80	280.00	12	AGRALE	8002105067001
TR/316	L-595	339.40	63.50	6.40	330.00	12	AGRALE	8005150044003
TR/328	L-679	445.80	98.40	9.50	432.00	16	CATERPILLAR	4D5759
TR/330	L-451	140.60	76.20	6.40	330.00	8	CATERPILLAR	6K6170
TR/338		254.10	101.60	9.50	426.00	13	CATERPILLAR	2S4297
TR/348		419.10	63.50	8.50	413.00	18	CLARK	118255
TR/368	L-1047	438.10	101.60	10.00	438.00	20	CLARK	118268-A
TR/906		6 X TR/330-S/F						
TR/909		5 X TR/338						

Remarks/*Notas:*

Blank "#" column: item is supplied undrilled only.

Columna "#" en blanco: el ítem es suministrado sin perforar.

FRAS-LE®

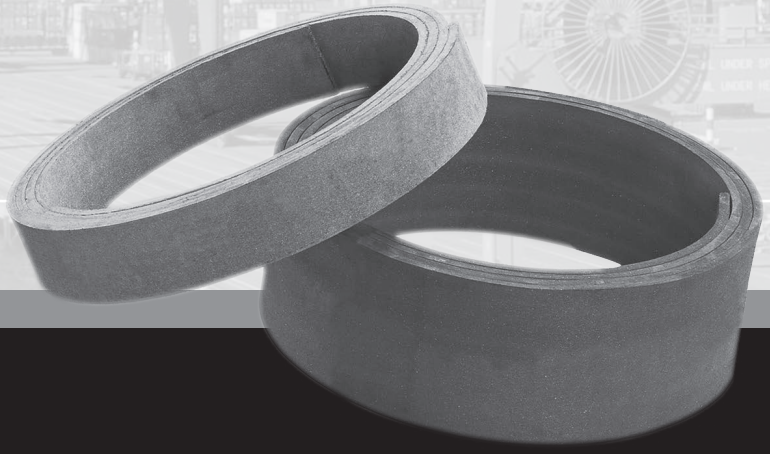

Molded Roll Linings

Guarniciones Moldeadas en Rollos

Dimensions/Dimensiones				FRAS-LE Reference Referencia
(mm)	(inch)	(mm)	(inch)	
3.00		30.00	1 3/16	LM/30.0x3.0
3.00		38.10	1 1/2	LM/38.1x3.0
3.00		42.00		LM/42.0x3.0
3.00		44.50		LM/44.5x30
3.10		35.00		LM/35.0x3.1
3.20	1/8	31.80	1 1/4	LM/1 1/4"x1/8"
3.20	1/8	44.45	1 3/4	LM/1 3/4"x1/8"
3.20	1/8	50.80	2	LM/2"x1/8"
3.20	1/8	152.40	6	LM/6"x1/8"
3.50		38.10	1 1/2	LM/38.1x3.5
4.00	5/32	25.40	1	LM/1"x5/32"
4.00	5/32	30.00		LM/30x4
4.00	5/32	31.80	1 1/4	LM/500
4.00	5/32	35.00	1 3/8	LM/407
4.00	5/32	38.10	1 1/2	LM/501
4.00	5/32	40.00		LM/40.0x4.0 (EXCLUIR)
4.00	5/32	42.00		LM/408
4.00	5/32	44.50	1 3/4	LM/502
4.00	5/32	50.80	2	LM/503
4.00	5/32	57.20	2 1/4	LM/504
4.00	5/32	63.50	2 1/2	LM/505
4.00	5/32	101.00		LM/518
4.00	5/32	76.20	3	LM/3"x5/32"
4.00	5/32	152.40	6	LM/152.4x4.0
4.50		25.40	1	LM/25.4x4.5
4.50		30.20	1 3/16	LM/1 3/16"x4.5
4.50		31.80	1 1/4	LM/31.8x4.5
4.50		35.00	1 3/8	LM/413
4.50		38.10	1/2 1	LM/38.1x4.5
4.50		40.00		LM/40.0x4.5
4.50		42.00		LM/42.0x4.5
4.50		152.40	6	LM/518-C C/4.5
4.80	3/16	25.40	1	LM/510
4.80	3/16	30.00	1 3/16	LM/418
4.80	3/16	31.80	1 1/4	LM/511
4.80	3/16	35.00	1 3/8	LM/419
4.80	3/16	38.10	1/2 1	LM/512
4.80	3/16	42.00		LM/420-A
4.80	3/16	44.50	1 3/4	LM/513
4.80	3/16	50.80	2	LM/514
4.80	3/16	57.20	2 1/4	LM/515
4.80	3/16	63.50	2 1/2	LM/516
4.80	3/16	69.90	2 3/4	LM/517
4.80	3/16	76.20	3	LM/518
4.80	3/16	88.90	3 1/2	LM/518-A
4.80	3/16	101.60	4	LM/518-B
4.80	3/16	127.00	5	LM/5"x3/16"
4.80	3/16	152.40	6	LM/518-C
5.00		30.00	1 3/16	LM/30.0x5.0
5.00		31.80	1 1/4	LM/31.8x5.0
5.00		38.10	1/2 1	LM/38.1x5.0
5.00		42.00		LM/42.0x5.0
5.00		44.50	1 3/4	LM/44.5x5.0

Dimensions/Dimensiones				FRAS-LE Reference Referencia
(mm)	(inch)	(mm)	(inch)	
5.00		50.80	2	LM/50.8x5.0
5.00		63.50	2 1/2	LM/63.5x5.0
5.00		69.90	2 3/4	LM/69.9x5.0
5.00		76.20	3	LM/76.2x5.0
5.00		88.90	3 1/2	LM/88.9x5.0
5.60	7/32	30.00	1 3/16	LM/432
5.60	7/32	31.80	1 1/4	LM/519
5.60	7/32	38.10	1/2 1	LM/520
5.60	7/32	42.00		LM/434-A
5.60	7/32	44.50	1 3/4	LM/521
5.60	7/32	50.80	2	LM/522
5.60	7/32	57.20	2 1/4	LM/523
5.60	7/32	63.50	1/2 2	LM/524
5.60	7/32	65.00		LM/439
5.60	7/32	69.90	2 3/4	LM/524-A
5.60	7/32	76.20	3	LM/524-B
5.60	7/32	88.90	3 1/2	LM/524-D
5.60	7/32	101.60	4	LM/524-E
6.00		38.10	1 1/2	LM/38.1x6.0
6.00		50.80	2	LM/50.8x6.0
6.00		57.20	1/4 2	LM/57.2x6.0
6.00		60.00		LM/60.0x6.0
6.00		63.50	2 1/2	LM/63.5x6.0
6.40	1/4	30.00	1 3/16	LM/451
6.40	1/4	31.80	1 1/4	LM/525
6.40	1/4	38.10	1/2 1	LM/526
6.40	1/4	42.00		LM/453-A
6.40	1/4	44.50	1 3/4	LM/527
6.40	1/4	50.80	2	LM/528
6.40	1/4	57.20	1/4 2	LM/529
6.40	1/4	60.00		LM/457
6.40	1/4	63.50	1/2 2	LM/530
6.40	1/4	65.00		LM/458
6.40	1/4	69.90	2 3/4	LM/531
6.40	1/4	76.20	3	LM/532
6.40	1/4	82.60	3 1/4	LM/533
6.40	1/4	88.90	3 1/2	LM/534
6.40	1/4	101.60	4	LM/535
6.40	1/4	114.30	4 1/2	LM/536
6.40	1/4	127.00	5	LM/537
6.40	1/4	139.70	5 1/2	LM/5 1/2"x1/4"
6.40	1/4	152.40	6	LM/539
7.00		69.90	3/4 2	LM/69.9x7.0
7.00		70.15		LM/70.15x7.0
7.10	9/32	38.10	1 1/2	LM/538
7.10	9/32	44.50	1 3/4	LM/538-A
7.10	9/32	50.80	2	LM/538-B
7.10	9/32	57.20	2 1/4	LM/538-C
7.10	9/32	63.50	1/2 2	LM/538-D
7.10	9/32	65.00		LM/466
7.10	9/32	76.20	3	LM/538-E
8.00	5/16	38.10	1 1/2	LM/540
8.00	5/16	44.50	1 3/4	LM/541

Dimensions/Dimensiones				FRAS-LE Reference Referencia
(mm)	(inch)	(mm)	(inch)	
8.00	5/16	50.80	2	**LM/542**
8.00	5/16	57.20	2 1/4	**LM/543**
8.00	5/16	63.50	1/2 2	**LM/544**
8.00	5/16	65.00		**LM/479**
8.00	5/16	69.90	2 3/4	**LM/545**
8.00	5/16	76.20	3	**LM/546**
8.00	5/16	82.60	3 1/4	**LM/547**
8.00	5/16	88.90	3 1/2	**LM/548**
8.00	5/16	101.60	4	**LM/549**
8.00	5/16	114.30	4 1/2	**LM/550**
8.00	5/16	127.00	5	**LM/551**
8.00	5/16	139.70	5 1/2	**LM/5 1/2"x5/16"**
8.00	5/16	152.40	6	**LM/553**
9.00		69.90	2 3/4	**LM/69.9x9.0**
9.50	3/8	44.50	1 3/4	**LM/556**
9.50	3/8	50.80	2	**LM/557**
9.50	3/8	57.20	2 1/4	**LM/558**
9.50	3/8	63.50	2 1/2	**LM/559**
9.50	3/8	76.20	3	**LM/561**
9.50	3/8	82.60	3 1/4	**LM/562**
9.50	3/8	88.90	3 1/2	**LM/563**
9.50	3/8	101.60	4	**LM/564**
9.50	3/8	114.30	4 1/2	**LM/565**
9.50	3/8	127.00	5	**LM/566**

Dimensions/Dimensiones				FRAS-LE Reference Referencia
(mm)	(inch)	(mm)	(inch)	
9.50	3/8	139.70	5 1/2	**LM/567**
9.50	3/8	152.40	6	**LM/568**
10.00		76.20	3	**LM/76.2x10.0**
10.00		82.60	3 1/4	**LM/82.6x10.0**
10.00		88.90	3 1/2	**LM/88.9x10.0**
10.00		101.60	4	**LM/101.6x10.0**
10.00		114.30	4 1/2	**LM/114.3x10.0**
10.00		127.00	5	**LM/127.0x10.0**
10.00		139.70	5 1/2	**LM/139.7x10.0**
10.00		152.40	6	**LM/152.4x10.0**
11.10	7/16	63.50	2 1/2	**LM/569**
11.10	7/16	76.20	3	**LM/570**
11.10	7/16	88.90	3 1/2	**LM/571-A**
11.10	7/16	101.60	4	**LM/572**
11.10	7/16	127.00	5	**LM/574**
11.10	7/16	152.40	6	**LM/575**
12.70	1/2	57.10	2 1/4	**LM/2 1/4"x1/2"**
12.70	1/2	76.20	3	**LM/3"x1/2"**
12.70	1/2	88.90	3 1/2	**LM/3 1/2"x1/2"**
12.70	1/2	101.60	4	**LM/578**
12.70	1/2	114.30	4 1/2	**LM/579**
12.70	1/2	127.00	5	**LM/580**
12.70	1/2	139.70	5 1/2	**LM/5 1/2"x1/2"**
12.70	1/2	152.40	6	**LM/582**

Remarks/*Notas*:

Rolls are supplied with aproximately 8 meters (26,25 feet) for thickness up to 5/16" (8mm) inclusive and approximately 5 meters (16,4 feet) for greater thicknesses.

Los rollos son suministrados con aproximadamente 8 metros para espesores hasta 5/16" (8mm) inclusive y aproximadamente 5 metros para espesores mayores.

FRAS-LE®

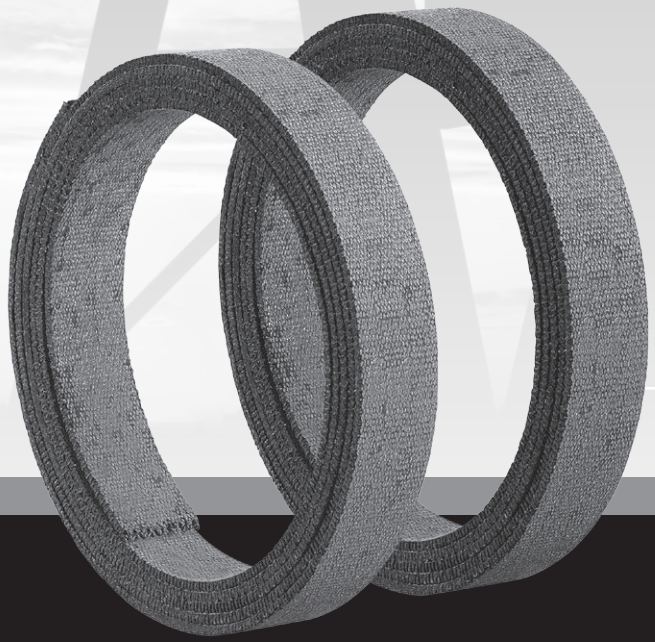

Woven Roll Linings

Guarniciones Trenzadas en Rollos

Dimensions/Dimensiones				FRAS-LE Reference Referencia
(mm)	(inch)	(mm)	(inch)	
4.00	5/32	101.60	4	LT/569
4.00	5/32	25.40	1	LT/560
4.00	5/32	330.20	13	LT/13"x5/32"
4.00	5/32	38.10	1 1/2	LT/562
4.00	5/32	40.00		LT/40.0x4.0
4.00	5/32	44.50	1 3/4	LT/563
4.00	5/32	50.80	2	LT/564
4.00	5/32	63.50	2 1/2	LT/566
4.00	5/32	76.20	3	LT/568
4.80	3/16	101.60	4	LT/579
4.80	3/16	114.30	4 1/2	LT/4 1/2"x3/16"
4.80	3/16	127.00	5	LT/581
4.80	3/16	139.70	5 1/2	LT/5 1/2"x3/16"
4.80	3/16	152.40	6	LT/582
4.80	3/16	203.20	8	LT/583
4.80	3/16	25.40	1	LT/570
4.80	3/16	254.00	10	LT/10"x3/16"
4.80	3/16	31.80	1 1/4	LT/571
4.80	3/16	330.20	13	LT/587-B
4.80	3/16	38.10	1 1/2	LT/572
4.80	3/16	44.50	1 3/4	LT/573
4.80	3/16	50.80	2	LT/574
4.80	3/16	57.20	2 1/4	LT/575
4.80	3/16	63.50	2 1/2	LT/576
4.80	3/16	69.90	2 3/4	LT/576-A
4.80	3/16	76.20	3	LT/577
4.80	3/16	88.90	3 1/2	LT/578
5.00		330.00		LT/330.0x5.0
5.00		45.00		LT/45.0x5.0
5.00		80.00		LT/80.0X5.0
5.00		90.00		LT/90.0x5.0
5.60	7/32	101.60	4	LT/4"x7/32"
5.60	7/32	25.40	1	LT/700
5.60	7/32	38.10	1 1/2	LT/702
5.60	7/32	44.50	1 3/4	LT/703
5.60	7/32	50.80	2	LT/704
5.60	7/32	57.20	2 1/4	LT/705
5.60	7/32	63.50	2 1/2	LT/706
5.60	7/32	76.20	3	LT/708
6.00		330.00		LT/330.0x6.0
6.00		60.00		LT/60.0x6.0
6.00		70.00		LT/70.0x6.0
6.00		76.00		LT/76.0x6.0
6.00		80.00		LT/80.0x6.0
6.40	1/4	101.60	4	LT/597
6.40	1/4	114.30	4 1/2	LT/598
6.40	1/4	127.00	5	LT/599
6.40	1/4	139.70	5 1/2	LT/5 1/2"x1/4"
6.40	1/4	152.40	6	LT/600
6.40	1/4	177.80	7	LT/600-B
6.40	1/4	203.20	8	LT/601
6.40	1/4	25.40	1	LT/588
6.40	1/4	254.00	10	LT/603

Dimensions/Dimensiones				FRAS-LE Reference Referencia
(mm)	(inch)	(mm)	(inch)	
6.40	1/4	304.80	12	LT/605
6.40	1/4	31.80	1 1/4	LT/589
6.40	1/4	330.20	13	LT/607
6.40	1/4	38.10	1 1/2	LT/590
6.40	1/4	44.50	1 3/4	LT/591
6.40	1/4	50.80	2	LT/592
6.40	1/4	57.20	2 1/4	LT/593
6.40	1/4	63.50	2 1/2	LT/594
6.40	1/4	69.90	2 3/4	LT/594-A
6.40	1/4	76.20	3	LT/595
6.40	1/4	82.60	3 1/4	LT/3 1/4"x1/4"
6.40	1/4	88.90	3 1/2	LT/596
6.40		80.00		LT/80.0X6.4
8.00	5/16	100.00		LT/100.0x8.0
8.00	5/16	101.60	4	LT/614
8.00	5/16	114.30	4 1/2	LT/615
8.00	5/16	120.60	4 3/4	LT/4 3/4"x5/16"
8.00	5/16	127.00	5	LT/616
8.00	5/16	130.00		LT/130.0x8.0
8.00	5/16	139.70	5 1/2	LT/5 1/2"x5/16"
8.00	5/16	150.00		LT/150.0x8.0
8.00	5/16	152.40	6	LT/617
8.00	5/16	160.00		LT/160.0x8.0
8.00	5/16	170.00		LT/170.0x8.0
8.00	5/16	175.00		LT/175.0x8.0
8.00	5/16	177.80	7	LT/617-B
8.00	5/16	180.00		LT/180.0x8.0
8.00	5/16	200.00		LT/200.0x8.0
8.00	5/16	203.20	8	LT/618
8.00	5/16	210.00		LT/210.0x8.0
8.00	5/16	220.00		LT/220.0x8.0
8.00	5/16	240.00		LT/240.0x8.0
8.00	5/16	250.00		LT/250.0x8.0
8.00	5/16	254.00	10	LT/619
8.00	5/16	304.80	12	LT/619-A
8.00	5/16	315.00		LT/315.0x8.0
8.00	5/16	330.20	13	LT/619-B
8.00	5/16	38.10	1/2 1	LT/1 1/2"x5/16"
8.00	5/16	50.80	2	LT/610
8.00	5/16	57.20	1/4 2	LT/610-A
8.00	5/16	63.50	1/2 2	LT/611
8.00	5/16	69.90	2 3/4	LT/611-A
8.00	5/16	76.20	3	LT/612
8.00	5/16	80.00		LT/80.0x8.0
8.00	5/16	82.60	3 1/4	LT/3 1/4"x5/16"
8.00	5/16	88.90	3 1/2	LT/613
8.00	5/16	90.00		LT/90.0x8.0
8.00		125.00		LT/125.0X8.0
9.50	3/8	101.60	4	LT/624
9.50	3/8	108.00	4 1/4	LT/4 1/4"x3/8"
9.50	3/8	110.00		LT/110.0x9.5
9.50	3/8	114.30	4 1/2	LT/625
9.50	3/8	120.60	4 3/4	LT/4 3/4"x3/8"

Dimensions/Dimensiones				FRAS-LE Reference Referencia
(mm)	(inch)	(mm)	(inch)	
9.50	3/8	127.00	5	LT/626
9.50	3/8	130.00		LT/130.0x9.5
9.50	3/8	139.70	5 1/2	LT/626-A
9.50	3/8	152.40	6	LT/627
9.50	3/8	158.80	6 1/4	LT/6 1/4"x3/8"
9.50	3/8	160.00		LT/160.0x9.5
9.50	3/8	165.10	6 1/2	LT/6 1/2"x3/8"
9.50	3/8	177.80	7	LT/628
9.50	3/8	203.20	8	LT/629
9.50	3/8	210.00		LT/210.0x9.5
9.50	3/8	228.60	9	LT/9"X3/8"
9.50	3/8	254.00	10	LT/630
9.50	3/8	279.40	11	LT/11"x3/8"
9.50	3/8	304.80	12	LT/631
9.50	3/8	330.20	13	LT/633
9.50	3/8	38.10	1 1/2	LT/1 1/2"x3/8"
9.50	3/8	50.80	2	LT/620-A
9.50	3/8	57.20	1/4 2	LT/620-B
9.50	3/8	63.50	1/2 2	LT/621
9.50	3/8	76.20	3	LT/622
9.50	3/8	82.60	1/4 3	LT/622-A
9.50	3/8	88.90	1/2 3	LT/623
10.00		100.00		LT/100.0x10.0
10.00		101.60	4	LT/101.6x10.0
10.00		110.00		LT/110.0x10.0
10.00		120.00		LT/120.0x10.0
10.00		125.00		LT/125.0x10.0
10.00		127.00		LT/127.0x10.0
10.00		130.00		LT/130.0x10.0
10.00		140.00		LT/140.0x10.0
10.00		145.00		LT/145.0x10.0
10.00		150.00		LT/150.0x10.0
10.00		160.00		LT/160.0x10.0
10.00		180.00		LT/180.0x10.0
10.00		200.00		LT/200.0x10.0
10.00		250.00		LT/250.0x10.0
10.00		330.00		LT/330.0x10.0
10.00		70.00		LT/70.0x10.0
10.00		76.00		LT/76.0x10.0
10.00		80.00		LT/80.0x10.0
10.00		90.00		LT/90.0x10.0
10.00		95.00		LT/95.0x10.0
11.00		160.00		LT/160.0X11.0
11.10	7/16	101.60	4	LT/644
11.10	7/16	114.30	1/2 4	LT/644-A
11.10	7/16	127.00	5	LT/645
11.10	7/16	152.40	6	LT/646
11.10	7/16	330.20	13	LT/651
11.10	7/16	88.90	1/2 3	LT/643
12.00		100.00		LT/100.0x12.0
12.00		110.00		LT/110.0x12.0
12.00		120.00		LT/120.0x12.0
12.00		130.00		LT/130.0x12.0

Dimensions/Dimensiones				FRAS-LE Reference Referencia
(mm)	(inch)	(mm)	(inch)	
12.00		140.00		LT/140.0x12.0
12.00		150.00		LT/150.0x12.0
12.00		180.00		LT/180.0x12.0
12.00		200.00		LT/200.0x12.0
12.00		240.00		LT/240.0x12.0
12.00		250.00		LT/250.0x12.0
12.00		255.00		LT/255.0x12.0
12.00		280.00		LT/280.0x12.0
12.00		330.00		LT/330.0x12.0
12.00		75.00		LT/75.0X12.0
12.00		80.00		LT/80.0x12.0
12.00		90.00		LT/90.0x12.0
12.70	1/2	101.60	4	LT/663
12.70	1/2	114.30	4 1/2	LT/664
12.70	1/2	120.60	3/4 4	LT/4 3/4"x1/2"
12.70	1/2	125.00		LT/125.0x1/2"
12.70	1/2	127.00	5	LT/665
12.70	1/2	130.00		LT/130.0x12.7
12.70	1/2	139.70	5 1/2	LT/666
12.70	1/2	152.40	6	LT/667
12.70	1/2	160.00		LT/160.0x12.7
12.70	1/2	165.10	6 1/2	LT/667-A
12.70	1/2	170.00		LT/170.0x12.7
12.70	1/2	177.80	7	LT/668
12.70	1/2	203.20	8	LT/668-A
12.70	1/2	228.60	9	LT/668-B
12.70	1/2	230.00		LT/230.0x12.7
12.70	1/2	254.00	10	LT/669
12.70	1/2	279.40	11	LT/11"X1/2"
12.70	1/2	304.80	12	LT/670
12.70	1/2	330.20	13	LT/672
12.70	1/2	50.80	2	LT/2"x1/2"
12.70	1/2	63.50	1/2 2	LT/660
12.70	1/2	76.20	3	LT/661
12.70	1/2	88.90	1/2 3	LT/662
13.00	3/4	330,20	13	LT/13"X3/4"
14.00		100.00		LT/100.0x14.0
14.00		110.00		LT/110.0x14.0
14.00		120.00		LT/120.0x14.0
14.00		140.00		LT/140.0x14.0
14.00		150.00		LT/150.0x14.0
14.00		180.00		LT/180.0x14.0
14.00		330.00		LT/330.0x14.0
14.00		60.00		LT/60.0x14.0
14.00		80.00		LT/80.0x14.0
14.30	9/16	203.20	8	LT/8"x9/16"
14.30	9/16	330.20	13	LT/13"x9/16"
15.00	3/4	114.30	4 1/2	LT/130X15
15.00		100.00		LT/100.0X15.00
15.00		130.00		LT/230X15
15.00		150.00		LT/150.0X15.0
15.00		180.00		LT/180.0x15.0
15.00		200.00		LT/200.0x15.0

Dimensions/Dimensiones				FRAS-LE Reference Referencia
(mm)	(inch)	(mm)	(inch)	
15.00		210.00		**LT/210.0x15.0**
15.00		230.00		**LT/230,0X15.0**
15.00		250.00		**LT/250.0x15.0**
15.90	5/8	101.60	4	**LT/673**
15.90	5/8	114.30	4 1/2	**LT/4 1/2"x5/8"**
15.90	5/8	127.00	5	**LT/674**
15.90	5/8	139.70	5 1/2	**LT/5 1/2"x5/8"**
15.90	5/8	152.40	6	**LT/675**
15.90	5/8	165.10	6 1/2	**LT/6 1/2"x5/8"**
15.90	5/8	177.80	7	**LT/675-A**
15.90	5/8	203.20	8	**LT/676**
15.90	5/8	228.60	9	**LT/9"x5/8"**
15.90	5/8	254.00	10	**LT/676-B**
15.90	5/8	279.40	11	**LT/11"x5/8"**
15.90	5/8	304.80	12	**LT/677**
15.90	5/8	330.20	13	**LT/677-B**
15.90	5/8	50.80	2	**LT/2"X5.8"**
15.90	5/8	76.20	3	**LT/3″x5/8″**
19.00	3/4	114.00	1/2 4	**LT/4 1/2"X3/4"**
19.00	3/4	120.60	3/4 4	**LT/4 3/4"x3/4"**
19.00	3/4	127.00	5	**LT/679**
19.00	3/4	139.70	5 1/2	**LT/5 1/2"x3/4"**
19.00	3/4	152.40	6	**LT/680**
19.00	3/4	177.80	7	**LT/680-B**
19.00	3/4	180.00		**LT/180.0x19.0**
19.00	3/4	203.20	8	**LT/681**
19.00	3/4	210.00		**LT/210.0x19.0**

Dimensions/Dimensiones				FRAS-LE Reference Referencia
(mm)	(inch)	(mm)	(inch)	
19.00	3/4	215.90	8 1/2	**LT/8 1/2"x3/4"**
19.00	3/4	228.60	9	**LT/9"x3/4"**
19.00	3/4	254.00	10	**LT/681-A**
19.00	3/4	304.80	12	**LT/12"x3/4"**
19.00	3/4	330.20	13	**LT/681-B**
20.00		180.00		**LT/180.0x20.0**
20.00		200.00		**LT/200.0x20.0**
20.00		220.00		**LT/220.0x20.0**
20.00		230.00		**LT/230.0x20.0**
20.00		250.00		**LT/250.0x20.0**
22.20	7/8	177.80	7	**LT/7"x7/8"**
22.20	7/8	304.80	12	**LT/12″x7/8″**
22.20	7/8	330.20	13	**LT/13"x7/8"**
25.40	1	177.80	7	**LT/7"x1"**
25.40	1	190.50		**LT/190.5x25.4**
25.40	1	203.20	8	**LT/691**
25.40	1	205.00		**LT/205.0x25.4**
25.40	1	225.00		**LT/225.0X25.4**
25.40	1	254.00	10	**LT/693**
25.40	1	280.00		**LT/280.0x25.4**
25.40	1	304.80	12	**LT/12"x1"**
25.40	1	330.20	13	**LT/13"x1"**
25.40	1	88.90	3 1/2	**LT/3 1/2"x1"**
28.60	11/8	254.00	10"	**LT/10"X11/8"**
28.60	11/8"	304.80	12"	**LT/12"X11/8"**
31.80	1 1/4	254.00	10	**LT/10"x1 1/4"**

Remark/*Notas*:

Linings are supplied rectified (ground on both sides), outer and inner. Rolls are aproximately 10 meters (32,81 feet).

Los rollos son suministrados rectificados en la parte interna y externa y son de aproximadamente 10 metros.

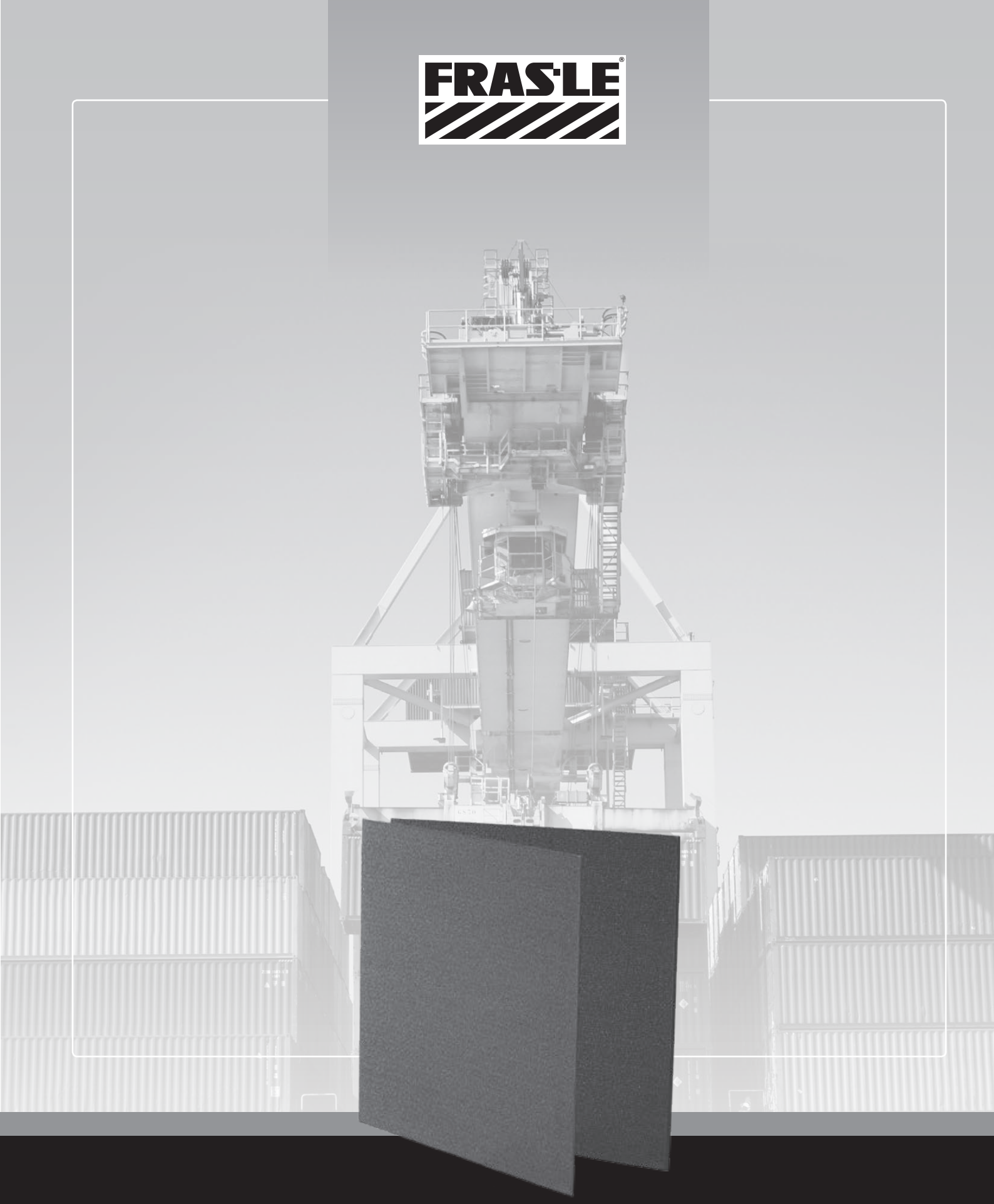

Universal Flat Sheets

Planchas Universales

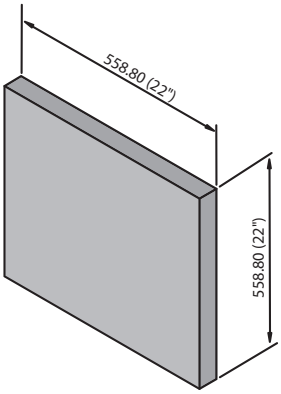

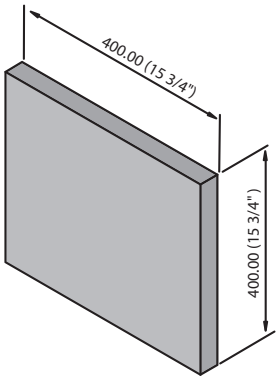

Thick/Espesor (mm)	Thick/Espesor (inch)	FRAS-LE Reference/Referencia
4.80	3/16	**PU/904**
5.60	7/32	**PU/905**
6.40	1/4	**PU/906**
7.10	9/32	**PU/907**
8.00	5/16	**PU/908**
9.50	3/8	**PU/910**
11.10	7/16	**PU/912**
12.70	1/2	**PU/914**
14.30	9/16	**PU/915**
15.90	5/8	**PU/916**
17.50	11/16	**PU/917**
19.00	3/4	**PU/918**
20.60	13/16	**PU/919**
22.20	7/8	**PU/920**
23.80	15/16	**PU/921**
25.40	1	**PU/922**
30.20	1 3/16	**PU/925**
31.80	1 1/4	**PU/926**
33.30	1 15/16	**PU/927**
35.00	1 3/8	**PU/928**
41.30	1 5/8	**PU/932**
44.50	1 3/4	**PU/934**
50.80	2	**PU/938**
63.50	2 1/2	**PU/946**

Thick/Espesor (mm)	Thick/Espesor (inch)	FRAS-LE Reference/Referencia
3.20	1/8	**PU/970**
4.00	5/32	**PU/971**
4.80	3/16	**PU/972**
6.40	1/4	**PU/974**
8.00	5/16	**PU/976**
9.50	3/8	**PU/978**
11.10	7/16	**PU/980**
12.70	1/2	**PU/982**
14.30	9/16	**PU/984**
15.90	5/8	**PU/986**
19.00	3/4	**PU/990**



Flexible Molded Slabs

Tejas Moldeadas Flexibles

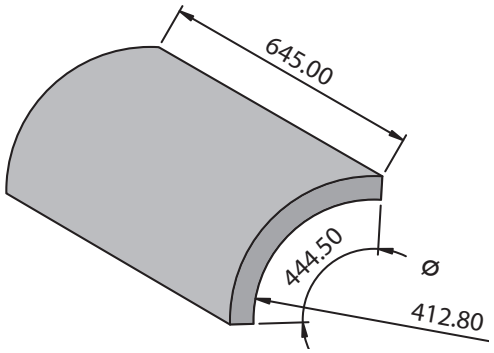

FRAS-LE Reference/Referencia	Thick/Espesor	
	mm	pulgadas
TF/11	3/16	4.8
TF/22	1/4	6.4
TF/33	5/16	7.9
TF/44	3/8	9.5
TF/55	7/16	11.1
TF/66	1/2	12.7
TF/77	9/16	14.3
TF/88	5/8	15.9
TF/99	3/4	19.1
TF/100	7/8	22.2

FRAS-LE®

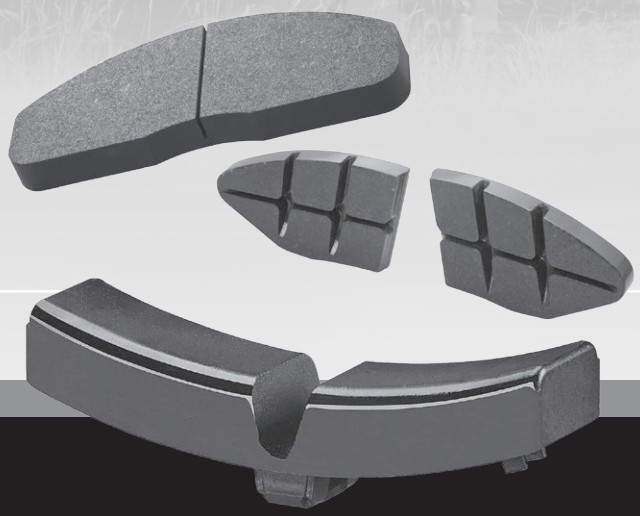

Brake Pads and Shoes for Railways and Subways

Pastillas y Zapatas para Ferrocarriles y Metros

S-104

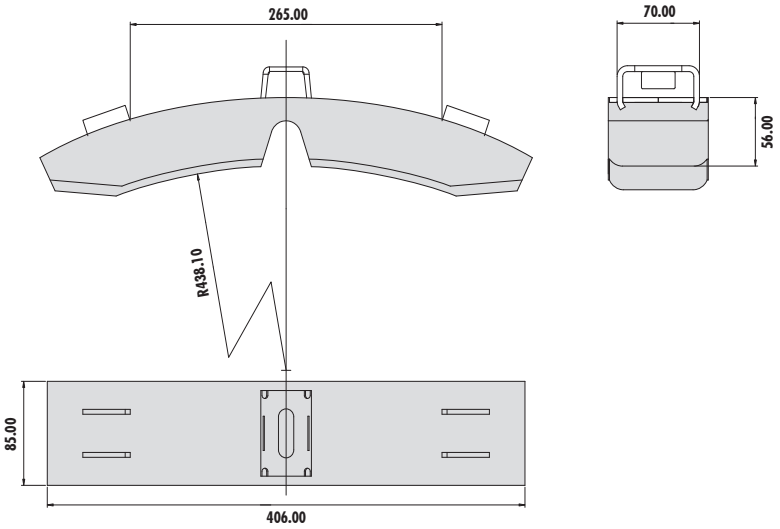

S-108

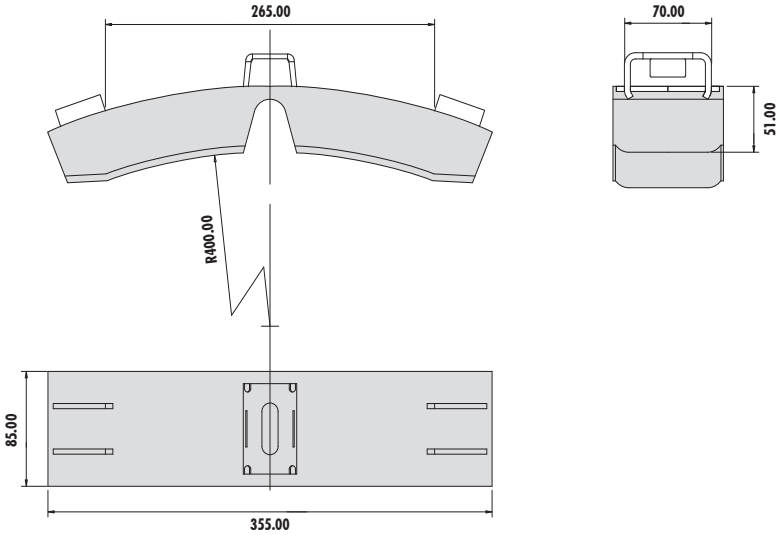

S-113

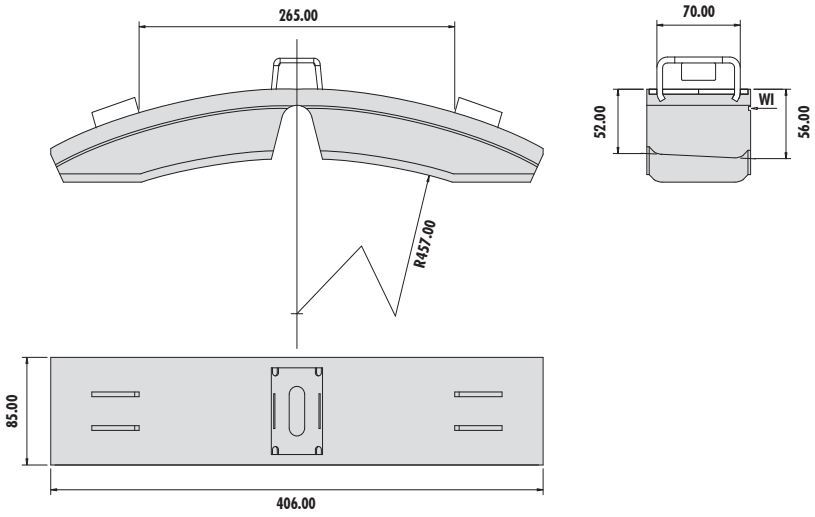

S-114

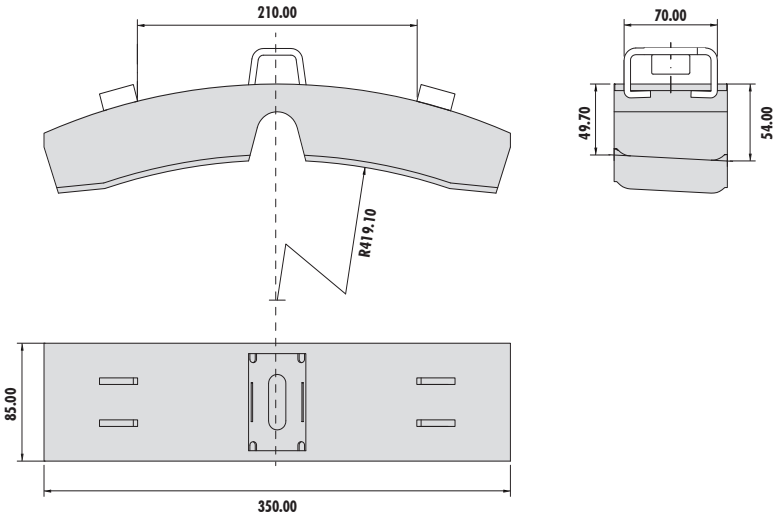

S-122

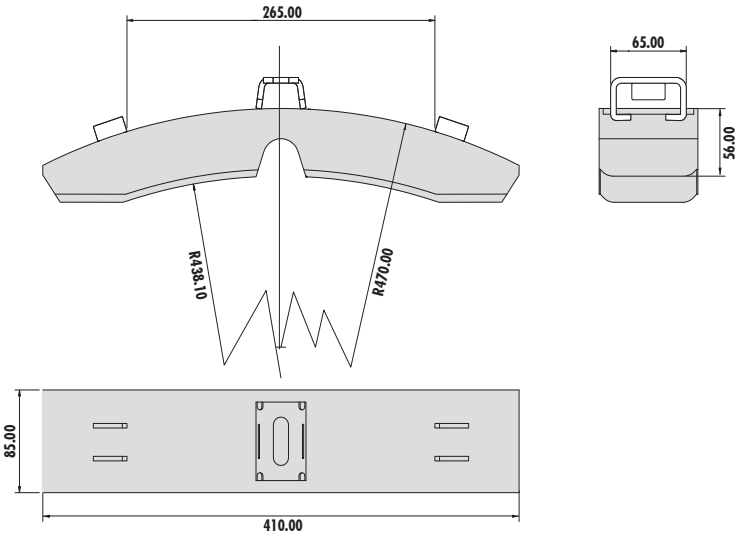

S-124

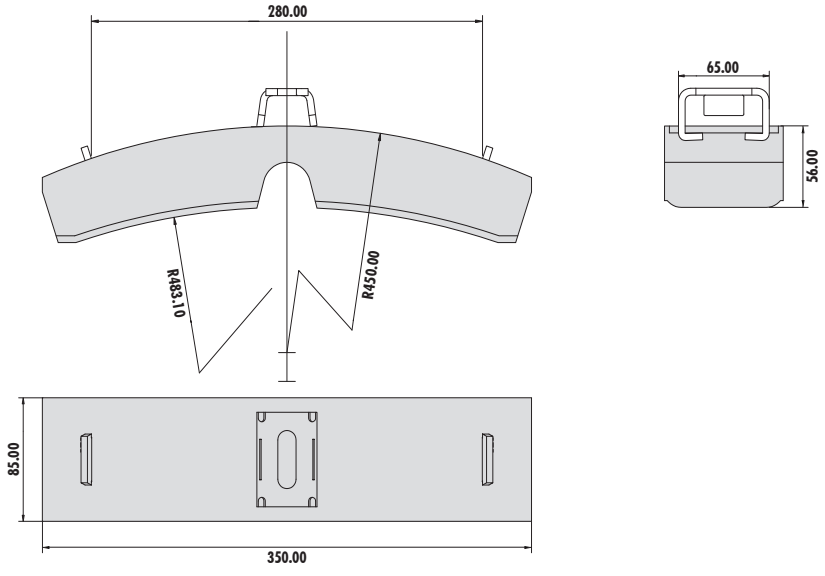

S-115

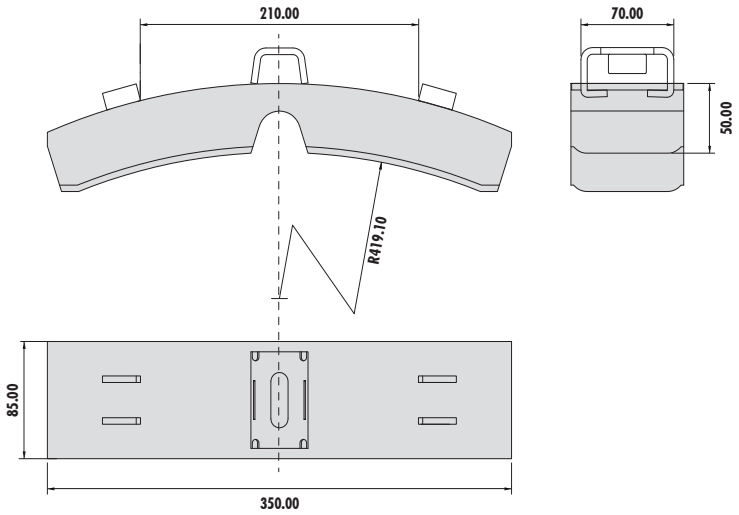

NAF/003-FA

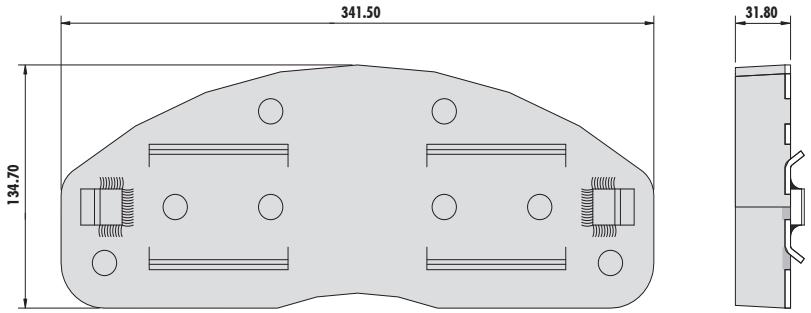

NAF/003-RA/24

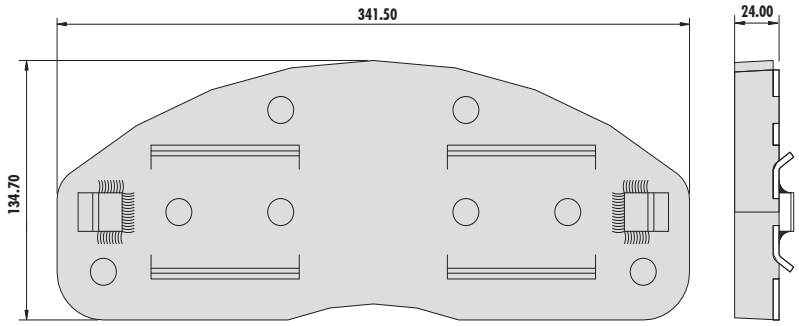

NAF/004

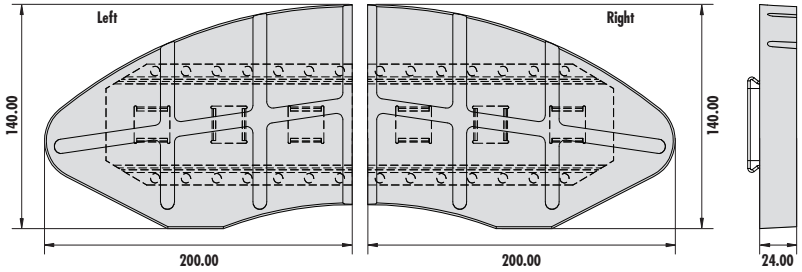

NAF/005

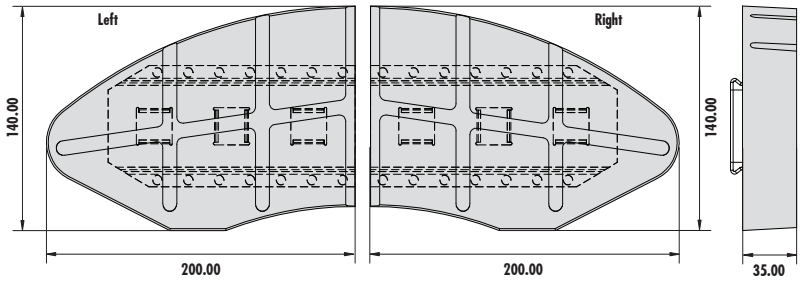

Notes:



Proving Grounds
Campo de Pruebas



Headquarters - Caxias do Sul - Rio Grande do Sul - Brazil
Planta Industrial - Caxias do Sul - Rio Grande do Sul - Brasil





Alabama Manufacturing Facility - United States
Planta Industrial - Alabama - Estados Unidos



Pinghu Manufacturing Facility - China
Planta Industrial - Pinghu - China

FRAS-LE ARGENTINA
Calle 109 (ex 1º de Agosto), 2755
B1650NHF - San Martín
Provincia de Buenos Aires - Argentina
Tel.: (+ 54 11) 4752 8500
ventas@fras-le.com.ar

FRAS-LE ANDINA
Calle Andrés de Fuenzalida, 69
Oficina 701
Providencia - Santiago - Chile
Tel: (+ 56 2) 334 9349
Fax: (+ 56 2) 231 6281
frasandina@fras-le.com

FRAS-LE MÉXICO
Avenida Homero 1804 INT 504,
Colonia Chapultepec Morales
Delegación Miguel Hidalgo, Polanco
CP: 11570 - México, D.F. - México
Tel: (+ 52 55) 5524 1896
Fax: (+ 52 55) 5524 1899
fras-lemexico@fras-le.com

FRAS-LE EUROPE
Ludwig-Erhard-Straße 8
45891 Gelsenkirchen
Germany
Tel: (+ 49 209) 386 240
Fax: (+ 49 209) 386 2415
fleu@fras-le.com

FRAS-LE NORTH AMERICA INC.
103 Echlin Boulevard
Prattville, Alabama
36067 - USA
Tel: 1 (334) 358 5775
Fax: 1 (334) 358 5776
fnai@fras-le.com

Michigan Sales & Engineering Office
29777 Telegraph Rd. Suite 2175
Southfield - Michigan
48034-7671 - USA
SAC : 1 800 243 2959
customerservice@fras-le.com

FRAS-LE ASIA
Pinghu Manufacturing Facility
No. 2088 Xin Ming Road,
Pinghu Economic Development Zone
Zhejiang Prov.
Postal code 314200
P.R. China.
Tel: (+ 86 573) 8529 0700
Fax: (+ 86 573) 8529 0720
fras-leasia@fras-le.com

FRAS-LE AFRICA
Regent Hill Office Park,
Block C, Office 212
Cnr Leslie & Turley Rds, Lonehill, 2062
Johannesburg - South Africa
Tel.: (+ 27 11) 702 8340
Fax : (+ 27 11) 467 1476
fras-leafrica@fras-le.com

FRAS-LE MIDDLE EAST
P.O. Box 261416 Lob 13, 1st Floor, No. 28
Jebel Ali Free Zone Dubai - U.A.E.
Tel.: (+971) 4 8810344
fras-leme@fras-le.com

FRAS-LE PANAMERICANA
Calle 100 - No. 19-61, Oficina 311
Código Postal 110221
Bogotá - Colombia
fras-lepan@fras-le.com

10/2018_2019

FRAS-LE®

www.fras-le.com

FRAS-LE S.A. - Headquarters
RS 122 - Km 66, nº 10945 • Forqueta • 95115-550 • Caxias do Sul • RS • Brazil
Tel.: (+55 54) 3239 1000 • export@fras-le.com

/frasleoficial